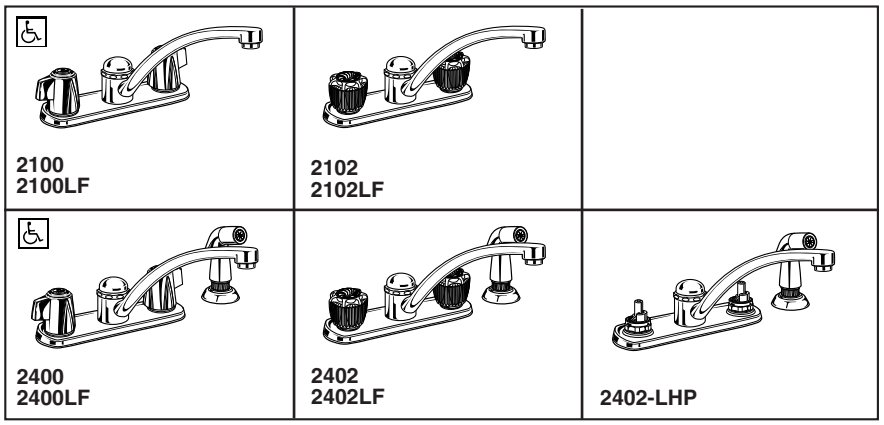


**Submitted Model No.:** _____

**Specific Features:** _____

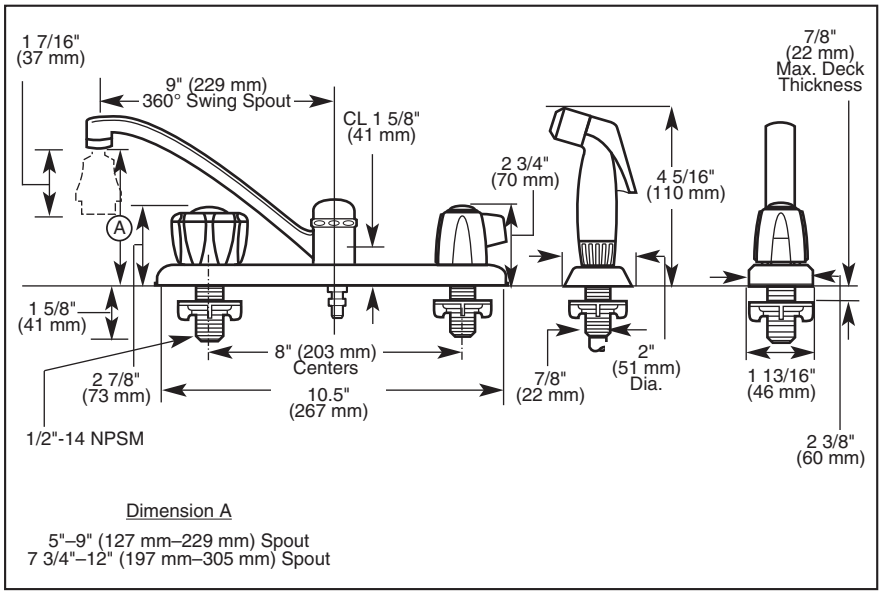


Available LHP Handle Options ▲ Designate Proper Finish Suffix

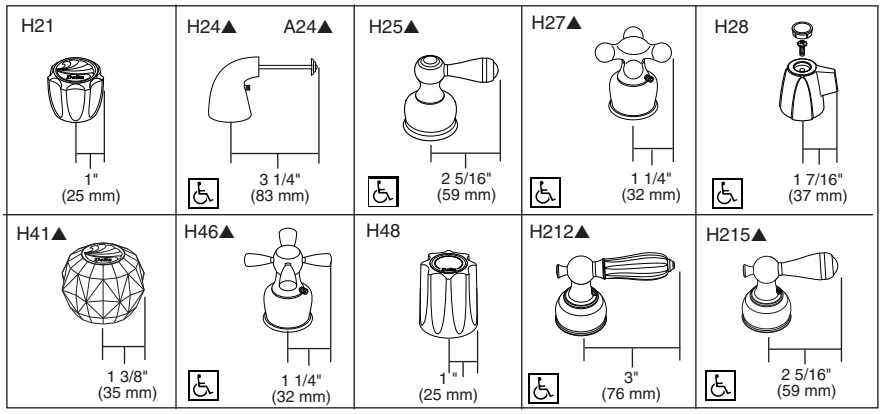


Available LHP Handle Accent Options

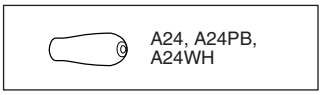


# KITCHEN FAUCETS

- Classic Series
- Two Handle Deck Mount
- 3 and 4 Hole Sink Applications

## STANDARD SPECIFICATIONS:

- Solid brass fabricated body.
- 8" (203 mm) centers.
- 9" (229 mm) long spout swings 360°.
- Hot and cold stems are interchangeable.
- Control mechanism shall be of the rotating cylinder type with stainless steel plate and 180° rotation, with replaceable non-metallic seats operating in stainless steel lined sockets.
- 1/2"-14 NPSM threaded male inlet shanks.
- Models 2400, 2402 and 2402-LHP Series with spray attachment have anti-siphon device as integral part of valve body.
- Quick Snap® vegetable sprayer hose installation on models 2400, 2402 and 2402-LHP series.

## WARRANTY

- Lifetime Faucet and Finish Limited Warranty to the original consumer purchaser to be free from defects in material and workmanship.
- 5 Year Limited Warranty for usage in all industrial, commercial and business applications.

## COMPLIES WITH:

- ASME A112.18.1 / CSA B125.1
- Indicates compliance to ICC/ANSI A117.1
- "LF" suffix indicates model is verified compliant with .25% weighted average Pb content regulation.

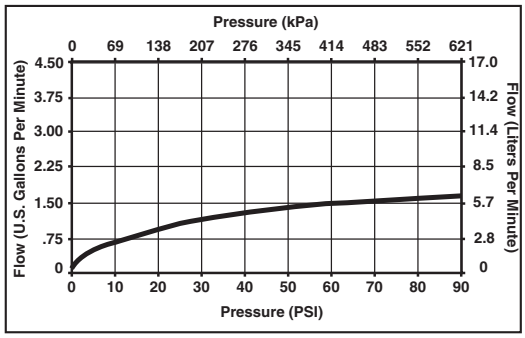


Delta reserves the right (1) to make changes in specifications and materials, and (2) to change or discontinue models, both without notice or obligation. Dimensions are for reference only. See current full line price book or www.specselect for finish options and product availability.

DSP-K-2100 Rev. G

DELTA FAUCET COMPANY
55 E. 111th Street, Indianapolis, Indiana 46280
350 South Edgeware Road, St. Thomas, ON N5P 4L1
© 2011 Masco Corporation of Indiana