KALLISTA®

Plié® Two-Piece Toilet

P70311, P70312, Combination P70310

FEATURES

- *Vitreous china*
- *Elongated bowl*
- *Two-piece; chair-height seating*
- *Two-bolt installation system*
- *Supply line included*
- *Dual flush flushing system*
- *Includes polished chrome finished brass flush actuator*

CODES/STANDARDS APPLICABLE

Specified model meets or exceeds the following:

- *ASME A112.19.2/CSA B45.1*
- *ASME A112.19.14*
- *EPA WaterSense®*

WaterSense · Meets EPA Criteria · Certified by IAPMO R&T

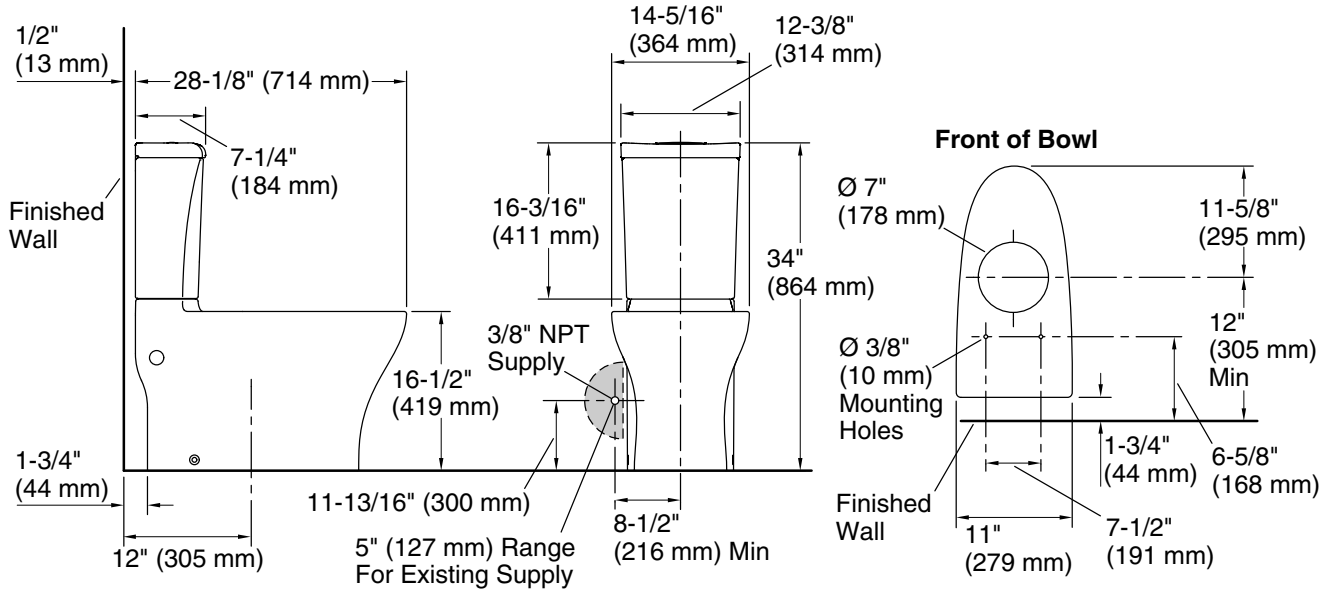

IMPORTANT! The rough-in must be 12" (305 mm) or more from the base of the wall or baseboard. Install or relocate the supply and outlet as necessary to conform to rough-in dimensions.

For new construction, install a new supply stop following the dimensions in the diagram.

For installations with an existing supply stop, the supply stop may need to be relocated if it is less than 8-1/2" (216 mm) from the centerline of the toilet. Dry fit the toilet to confirm if the supply stop needs to be relocated.

The supplied hose will extend roughly 6" (152 mm) from the toilet. If the supplied hose does not reach the supply stop, a longer supply hose may be used.

Fixture:	
Configuration	two-piece, elongated
Water per flush	1.6 gal (6 L) or 1.0 gal (3.8 L)
Passageway	2" (51 mm)
Water area	4-1/2" (114 mm) x 5-3/4" (146 mm)
Water depth from rim	8-1/2" (216 mm)
Seat post hole centers	5-1/2" (140 mm)

SPECIFIED MODEL			
Model	Description	Finishes	
P70310-00	Plié Two-Piece Toilet	❑ 0 Stucco White	
P70311-00	Plié Toilet Bowl	❑ 0 Stucco White	
P70312-00	Plié Toilet Tank	❑ 0 Stucco White	
Recommended Accessories (Choose one)			
P70313-CP, AD, AG, BL, BV, or PB	Contemporary Toilet Seat with Finished Brass, Slow-Close Hinges	❑ 0 Stucco White	
P70334-CP, AD, AG, BL, or BV	Premium Toilet Seat with Finished Brass, Slow-Close Hinges	❑ JV Java	❑ KZ Brunette
		❑ EM Ebonized Mahogany	
Optional Accessory			
P70314-00	Dual Flush Actuator Finish Upgrade	❑ AD Nickel Silver	❑ GN Gunmetal
		❑ W7 Black Nickel	❑ AG Brushed Nickel
		❑ BZ Antique Bronze	❑ LB Bronze
		❑ ULB Unlacquered Brass	

We reserve the right to make revisions without notice in the design of products or in packaging unless this right has specifically been waived at the time the order is accepted.

©2017 KALLISTA

Questions? Problems? For additional assistance, please contact KALLISTA's Customer Service Department at 1-888-4-KALLISTA (1-888-452-5547) or kallista.com.