KOHLER. Faucets

Tone™

Touchless kitchen faucet w/KOHLER® Konnect

K-23766-WB

Features

- Touchless on/off with a wave of your hand or an object such as a pan.
- Response® technology uses a state-of-the-art motion sensor for reliable touchless activation.
- LED light indicates Response® is ready to use.
- AC-powered operation—no batteries to replace.
- Voice control allows hands-free activation to turn the faucet on or off, pour specific amounts and fill preset measurements.*
- KOHLER Konnect® pairs with Amazon Alexa, Google Home and Apple Home Kit.**
- Innovative sensor monitors water usage and displays that information on the KOHLER Konnect® app.
- Notification can be sent to your mobile device when unusual flow of water is detected.***
- 2.4 GHz password-protected Wi-Fi connection is required.
- Three-function pull-down sprayhead with touch control allows you to switch between aerated stream, Sweep® spray, and Boost technology.
- DockNetik® magnetic docking system securely locks the sprayhead into place when not in use.
- ProMotion® technology allows the pull-down sprayhead to swivel for more comfortable use.
- MasterClean™ sprayface features an easy-to-clean surface that withstands mineral buildup.
- KOHLER ceramic disc valves exceed industry longevity standards for a lifetime of durable performance.

Installation

- Requires nonswitched undercounter outlet.
- Single-hole installation (3-hole escutcheon sold separately).
- Flexible supply lines simplify installation.
- *When dispensing measured amounts, minimum of 8 oz. is required; accuracy may vary depending on water pressure and flow rate.
- **Siri is limited to on/off control. To control this HomeKit-enabled accessory, iOS 11.2 or later is recommended. HomeKit™ is a trademark of Apple Inc.
- ***Notification through the KOHLER Konnect® app can advise you when water flow is detected beyond the flow sensor greater than 0.5 gpm for 3 seconds. (Not to be relied upon for water leak detection.)
- Google, Google Home and Google Play are trademarks of Google LLC.

Adapters, Rough-in and Extension Kits

1012715	Range: 1-3/8" (34 mm) - 3-3/8" (85 mm)

Optional Products/Accessories

ADA | **CSA B651**

Codes/Standards

ASME A112.18.1/CSA B125.1
NSF/ANSI 61
NSF/ANSI 372
All applicable US Federal and State material regulations
DOE - Energy Policy Act 1992
California Energy Commission (CEC)
ADA
ICC/ANSI A117.1
CSA B651

KOHLER® Electronic Faucets, Valves, and Controls Five-Year Limited WarrantyKOHLER® Faucet Lifetime Limited Warranty

See website for detailed warranty information.

Available Colors/Finishes

Color tiles intended for reference only.

Color	Code	Description
	CP	Polished Chrome
	VS	Vibrant® Stainless
	BL	Matte Black
	2MB	Vibrant® Brushed Moderne Brass
	BMB	Matte Black with Moderne Brass
	CBL	Matte Black with Polished Chrome

KOHLER Faucets

Tone™

Touchless kitchen faucet w/KOHLER® Konnect

K-23766-WB

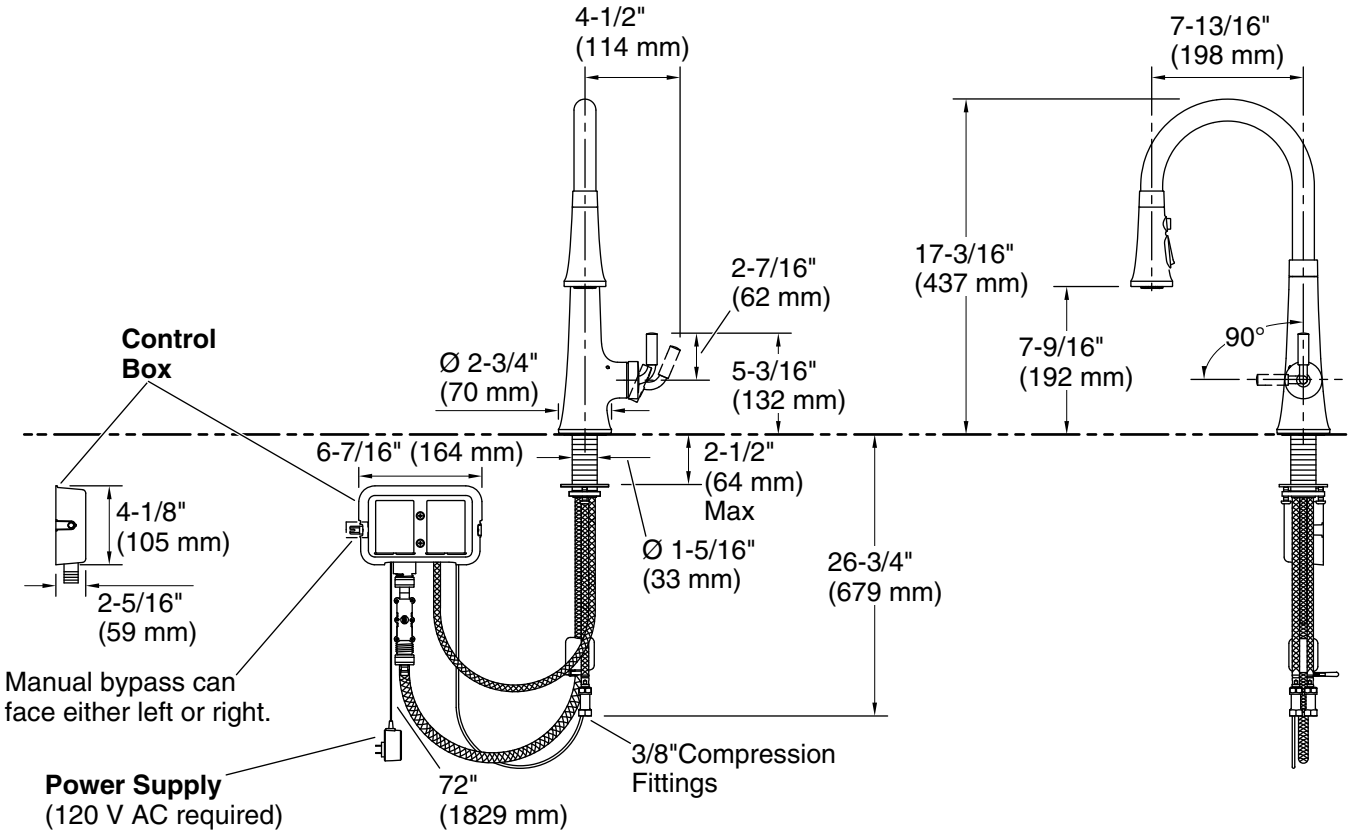

Required Electrical Service

One circuit required, protected with Class A Ground-Fault Circuit-Interrupter (GFCI). Outside North America, this device may be known as a Residual Current Device (RCD).

120 V

Technical Information

All product dimensions are nominal.

Power source:	Plug - AC, included
Drain included:	No

Notes

Install this product according to the installation instructions.

ADA complaint for faucet handles only.

ADA, CSA B651 compliant when installed to the specific requirements of these regulations.