Z1201-ND4

EZCARRY® ADJUSTABLE HORIZONTAL HIGH PERFORMANCE BACK-TO-BACK SIPHON JET NO-HUB WATER CLOSET CARRIER SYSTEM

SPECIFICATION SHEET

TAG _____

Dimensional Data (inches and [mm]) are Subject to Manufacturing Tolerances and Change Without Notice

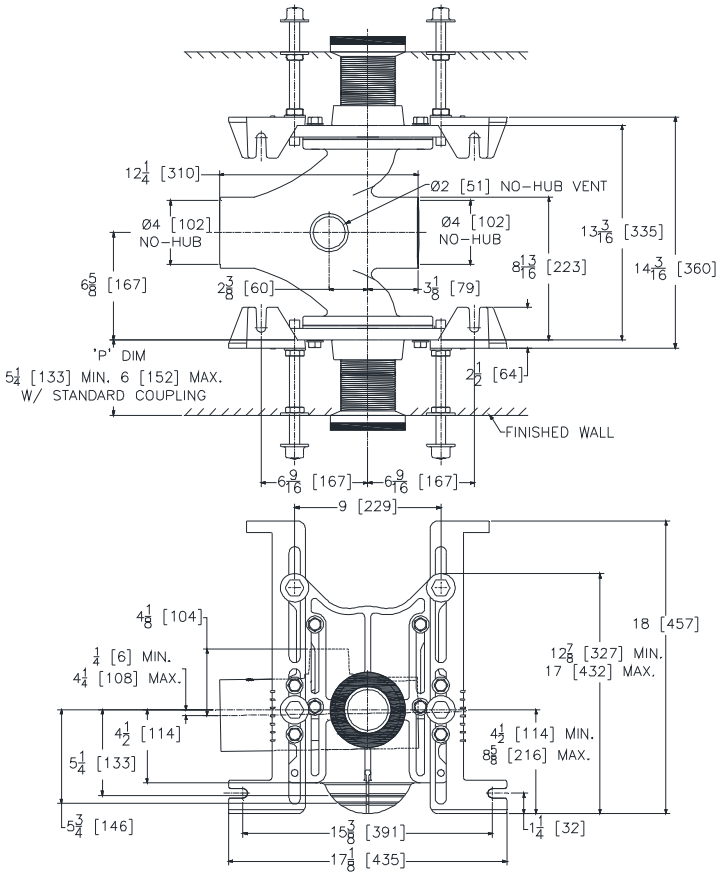

Product Number	Approx. Wt. lbs [kg]
Z1201-ND4	104 [47]

Note:
1. Z coupling, Min. 'P' Dim. Obtainable=2 [51].
   EZ-Set™ Coupling, Min. 'P' Dim. Obtainable=4-1/4 [108] or 2-1/16 [52] for 12 [305] NPT.
2. Feet bolted to floor using min. 1/2 [13] dia. anchors.

ENGINEERING SPECIFICATION: ZURN Z1201-ND4
EZCarry® horizontal siphon jet water closet carrier system with high performance waterway and 4" [102mm] no-hub connections. System includes Dura-Coated cast iron double main fitting with hydro-mechanically optimized sweep and extended 2" [51mm] vent, adjustable gasketed faceplates, floor mounted pre-fab slotted foot supports with top anchoring pre-fab support base, fixture bolts, trim, stud protectors, bonded “Neo-Seal” gaskets, and corrosion resistant, adjustable 3" [76mm] dia. X 6" [152mm] couplings with integral test caps designed to increase flow velocity and line carry. EZCarry® system complies with the requirements of ASME A112.6.1M up to a 500 lbs [227 kg] static load rating.

OPTIONS (Check/specify appropriate options)
Z1201-ND4 4 [102] No-Hub Back-to-Back Inlet (Double)

PREFIXES
____ Z D.C.C.I. System with Zurn ZZ Adjustable Coupling*
____ ZQ D.C.C.I. System with NPT Faceplate, Non-Adjustable Coupling

SUFFIXES
____ -A Auxiliary Support Assembly (For 'P' Dim. Greater than 18 [457])
____ -CC Corrosion Resistant Cast Iron Coupling (2-1/4 [57] to 12 [305])
____ -CE EZ-Set™ Coupling (NPSM 6 [152] ,12 [305] or custom) (NPT 12 [305] or custom)
____ -CL Custom Length Standard Coupling with Integral Test Cap (Specify Length 4, 8, 10, 12 [102, 203, 254, 305])
____ -CS 2-1/4 [57] Polymer Coupling with Integral Test Cap
____ -F Floor Mounted, Back Outlet Fixture Support
____ -G Galvanized Cast Iron
____ -M Auxiliary Foot Support (for 'P' Dim. 7 thru 18 [178 thru 457])
____ -RYK Unistrut Pre-Fab Foot Support
____ -VP Vandal-Proof Trim
____ -45 Finishing Frame for Siphon Jet System
____ -50 Flush Valve Supply Support for Water Closets

* Regularly furnished unless otherwise specified.

Zurn Industries, LLC | Specification Drainage Operation
1801 Pittsburgh Avenue, Erie, PA U.S.A. 16502 · Ph. 855-663-9876, Fax 814-454-7929
In Canada | **Zurn Industries Limited**
3544 Nashua Drive, Mississauga, Ontario L4V 1L2 · Ph. 905-405-8272, Fax 905-405-1292
www.zurn.com

Rev. K
Date: 09/19/18
C.N. No. 140612
Prod. | Dwg. No. Z1201-ND4