KOHLER. Faucets

Hint™

Centerset bathroom sink faucet

K-97094-4

Features

- Two handles offer separate control of hot and cold water.
- 1.2 gpm (4.5 lpm) maximum flow rate at 60 psi (4.14 bar).
- KOHLER® ceramic disc valves exceed industry longevity standards for a lifetime of durable performance.

Material

- Premium metal construction for durability and reliability.
- KOHLER finishes resist corrosion and tarnishing.

Installation

- Coordinates with Pitch® bath and shower trim.
- Centerset.

Recommended Products/Accessories

K-23726 Drain treatment
K-23723 Faucet cleaner

ADA | CSA B651 | OBC

Codes/Standards

ASME A112.18.1/CSA B125.1
NSF/ANSI 61
NSF/ANSI 372
All applicable US Federal and State material regulations
DOE - Energy Policy Act 1992
EPA WaterSense®
California Energy Commission (CEC)
ADA
ICC/ANSI A117.1
CSA B651
OBC

KOHLER® Faucet Lifetime Limited Warranty

See website for detailed warranty information.

Available Colors/Finishes

Color tiles intended for reference only.

Color	Code	Description
	CP	Polished Chrome
	BN	Vibrant® Brushed Nickel
	BL	Matte Black

KOHLER. Faucets

Hint™

Centerset bathroom sink faucet

K-97094-4

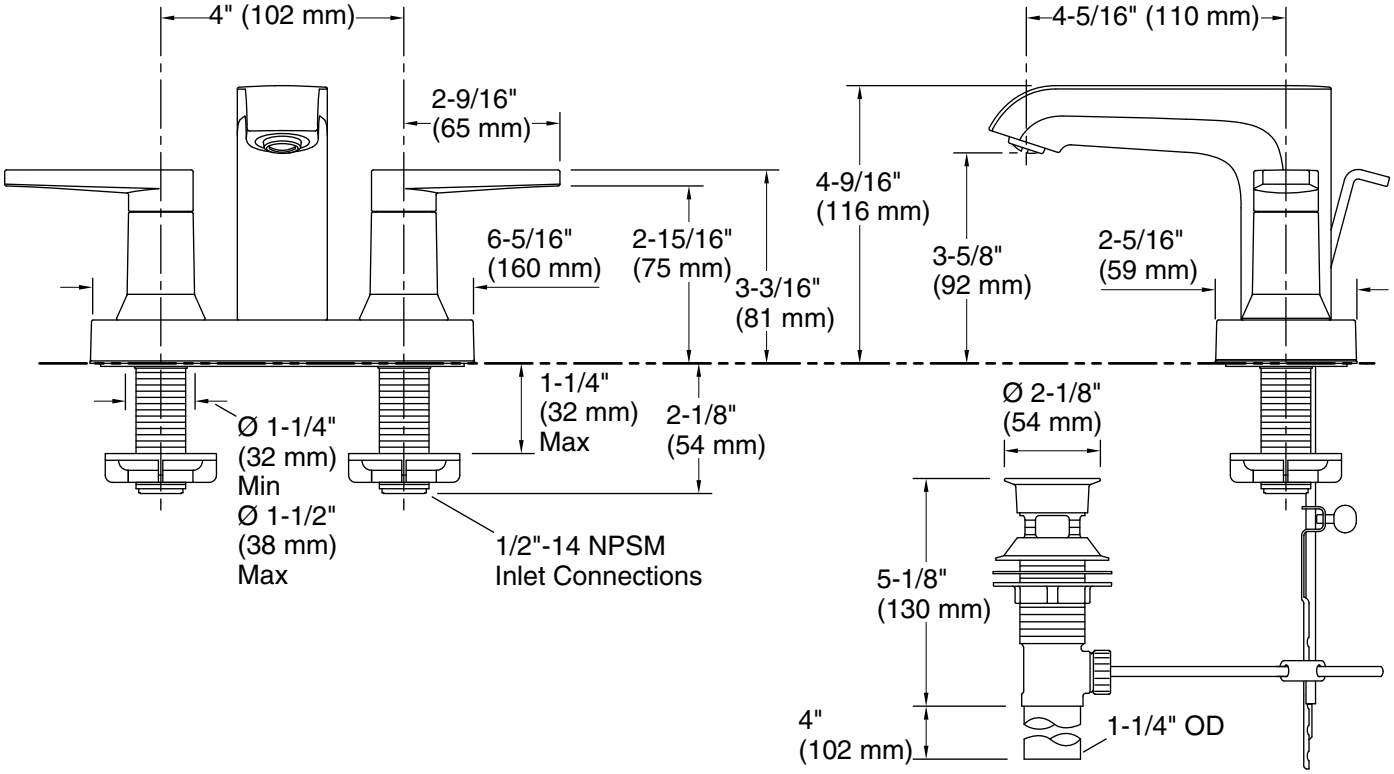

Technical Information

All product dimensions are nominal.

Faucet:

Flow rate:	1.2 gal/min (4.5 l/min)
Pressure:	60 psi (4.1 bar)

Spout:

Spout reach:	4-5/16" (109 mm)

Notes

Install this product according to the installation instructions.

ADA, OBC, CSA B651 compliant when installed to the specific requirements of these regulations.