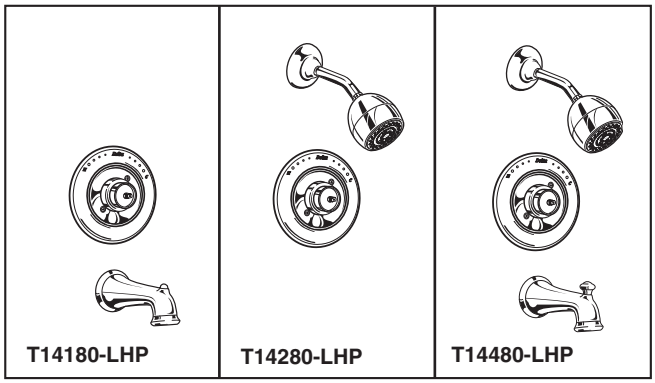

Submitted Model No.:_____

Specific Features:_____

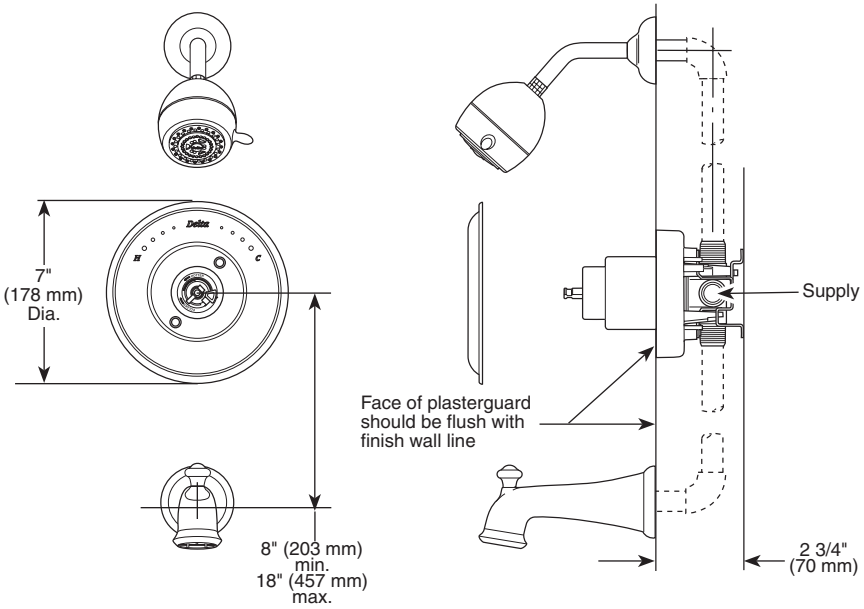

▲ = Specify Finish

RP38450▲ (Pull-Up Diverter)

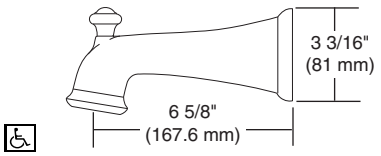

RP43028▲ (Non-Diverter)

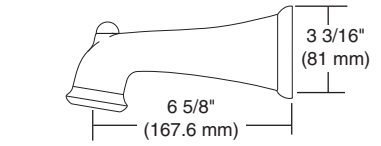

RP40594▲ Touch-Clean® Showerhead

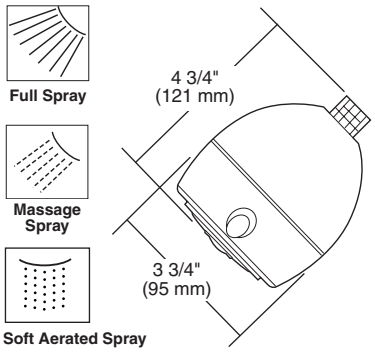

H717▲

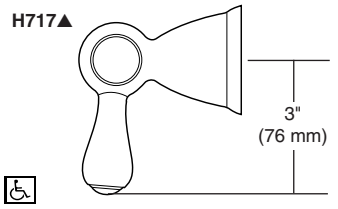

TUB AND SHOWER FAUCET TRIM

- Botanical® Bath Collection
- Tub Only (T14180 Series)
- Shower Only (T14280 Series)
- Tub/Shower (T14480 Series)

STANDARD SPECIFICATIONS:

- Monitor® 14 Series pressure balanced bath mixing valve with Scald-Guard®.
- Maintains a balanced pressure of hot and cold water even when a valve is turned on or off elsewhere in the system.
- For use with MultiChoice™ Universal rough valve body. (R10000 Series)
- Back-to-back installation capability.
- Solid brass fabricated body.
- Temperature only controlled with handle.
- Field adjustable to limit handle rotation into hot water zone.
- 120° maximum handle rotation.
- All parts replaceable from the front of the valve.
- LHP - less handle program - see recommended handle below.

WARRANTY

- Lifetime Faucet and Finish Limited Warranty to the original consumer purchaser to be free from defects in material and workmanship.
- 5 Year Limited Warranty for usage in all industrial, commercial and business applications.

COMPLIES WITH:

- ASME A112.18.1 / CSA B125.1
- ASSE 1016

Indicates ADA compliance to ICC/ANSI A117.1

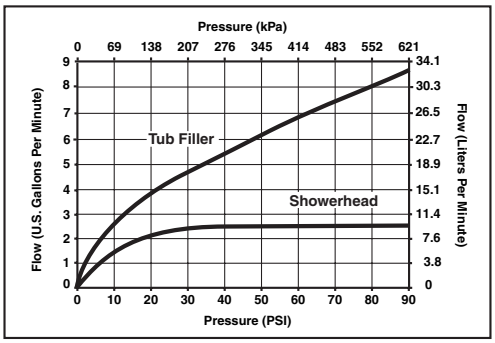

DELTA FAUCET COMPANY

55 E. 111th Street, Indianapolis, Indiana 46280
395 Matheson Blvd. E., Mississauga, ON L4Z 2H2
© 2008 Masco Corporation of Indiana

Delta reserves the right (1) to make changes in specifications and materials, and (2) to change or discontinue models, both without notice or obligation. Dimensions are for reference only. See current full-line price book or www.specselect.com for finish options and product availability.