70-200 SERIES
SOLDER END BRONZE BALL VALVE

Solder End, 600 CWP (psig), Cold Non-Shock. 150 psig Saturated Steam. (See referenced P/T charts)
Vacuum Service to 29 inches Hg.
MSS SP-110 compliant.

5 YEAR WARRANTY MADE IN USA

FEATURES

- Two-piece body
- Blowout-proof stem design
- Reinforced seats
- Adjustable packing gland

VARIATIONS AVAILABLE

- 70-240 Series (316 SS Ball & Stem)
- 70LF-HC Hose Cap & Chain

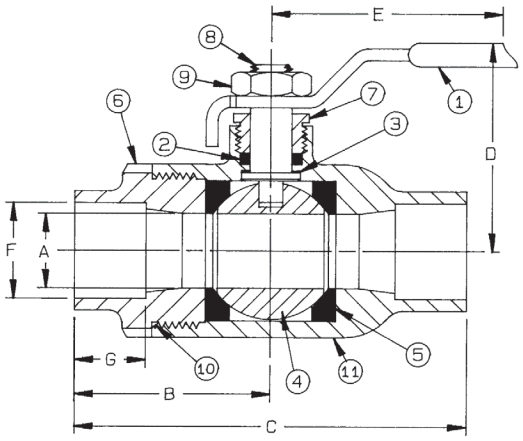

STANDARD MATERIAL LIST

	PART	MATERIAL
1	Lever and grip	Steel, zinc plated w/vinyl
2	Stem packing	MPTFE
3	Stem bearing	RPTFE
4	Ball	B16 Brass, chrome plated
5	Seat (2)	RPTFE (3/8" to 3"); TFM (4")
6	Retainer	B16 Brass (3/8" to 1") B584-C84400 (1.25" to 4")
7	Gland nut	B16 Brass
8	Stem	B16 Brass
9	Lever nut	Steel, zinc plated
10	Body seal (1.25" to 4")	PTFE
11	Body	B584-C84400

The 70-200 is designed to be soft soldered into lines without disassembly. This allows a tested valve to be installed without disturbing the seats and seals in any way. Soldering temperature not to exceed 500ºF.

OPTIONS AVAILABLE (MORE INFORMATION IN SECTION J)

- Minimum quantities apply
- To specify an option, replace the "01" standard suffix with the suffix of the option.
- To specify multiple options, replace the "01" suffix with the desired suffixes in the numerical order shown below. NOTE: Not all suffixes can be combined together.

(SUFFIX)	OPTION	SIZES
-01	Standard Configuration	All
-02-	Stem Grounded	3/8" to 4"
-04-	2.25" Stem Extension (Carbon Steel, Zinc Plated)	3/8" to 3"
-05-	Plain Ball	3/8" to 3"
-07-	Steel Tee Handle	3/8" to 2"
-08-	90º Reversed Stem	3/8" to 3"
-10-	SS Lever & Nut	3/8" to 3"
-11-	Therma-Seal™ Insulating Tee Handle	3/8" to 2"
-14-	Side Vented Ball (Uni-Directional)	3/8" to 4"
-15-	Wheel Handle, Steel	3/8" to 2"
-16-	Chain Lever - Vertical	3/4" to 2"
-24-	Graphite Packing	3/8" to 3"
-27-	SS Latch-Lock Lever & Nut	3/8" to 3"
-32-	SS Tee Handle & Nut	3/8" to 2"
-35-	PTFE Trim	3/8" to 3"
-39-	SS Hi-Rise Locking Wheel Handle, SS Nut	3/8" to 2"
-45-	Less Lever & Nut	3/8" to 3"
-46-	Latch Lock Lever - Lock in Closed Position Only	3/8" to 3"
-47-	SS Oval Latch-Lock Handle & Nut	3/8" to 2"
-48-	SS Oval Handle (No Latch) & Nut	3/8" to 2"
-49-	No Lubrication. Assembled Dry.	3/8" to 4"
-50-	2.25" CS Locking Stem Extension	3/8" to 3"
-56-	Multifill Seats & Packing	3/8" to 3"
-57-	Oxygen Cleaned	3/8" to 4"
-58-	Chain Lever - Horizontal	3/4" to 2"
-60-	Static Grounded Ball & Stem	3/8" to 3"
-63-	NPT x Solder/Socket Weld	3/8" to 4"
-92-	Balancing Stop	3/8" to 3"
-94	2.25" Stem Extension, Balancing Stop	3/8" to 3"
-HC-	Hose Cap & Chain with SS Lever & Nut	1/2" to 1"

Pressure/Temperature Ratings - Page M-10, Graph No. 4

DIMENSIONS

PRODUCT NUMBER	SIZE	A	B	C	D	E	F	G	WT.
70-202-01	3/8"	0.37	1.28	2.56	1.75	3.87	.505	0.37	0.63
70-203-01	1/2"	0.50	1.43	2.87	1.75	3.87	.630	0.50	0.71
70-204-01	3/4"	0.68	1.93	3.87	2.12	4.87	.880	0.75	1.44
70-205-01	1"	0.87	2.25	4.50	2.25	4.87	1.130	0.90	1.91
70-206-01	1.25"	1.00	2.31	4.62	2.62	5.50	1.380	0.96	2.95
70-207-01	1.5"	1.25	2.62	5.25	3.06	8.00	1.630	1.09	3.99
70-208-01	2"	1.50	3.18	6.37	3.25	8.00	2.130	1.34	5.71
70-209-01A	2.5"	2.00	3.74	7.51	3.72	8.00	2.630	1.48	15.53
70-200-01	3"	2.50	4.12	8.25	4.12	8.00	3.130	1.67	16.74
70-20A-01	4"	3.12	5.65	10.26	5.22	9.94	4.130	2.16	27.93

The listed C_v "factors" are derived from actual flow testing, in the Apollo® Ball Valve Division, Conbraco Industries, Inc., Pageland, South Carolina. These tests were completed using standard "off the shelf" valves with no special preparation and utilizing standard schedule 40 pipe. It should be understood that these factors are for the valve only and also include the connection configuration. The flow testing is done utilizing water as a fluid media and is a direct statement of the gallons of water flowed per minute with a 1 psig pressure differential across the valve/connection unit. Line pressure is not a factor. Because the C_v is a factor, the formula can be used to estimate flow of most media for valve sizing.

FLOW OF LIQUID

$$Q = C_V \sqrt{\frac{\Delta P}{SpGr}}$$

$$\text{or } \Delta P = \frac{(Q)^2\,(SpGr)}{(C_v)^2}$$

WHERE:

- Q = Flow in US gpm
- ΔP = Pressure drop (psig)
- SpGr = Specific gravity at flowing temperature
- C_v = Valve constant

FLOW OF GAS

$$Q = 1360\ C_V \sqrt{\frac{(\Delta P)\,(P_2)}{(SpGr)\,(T)}}$$

$$\text{or } \Delta P = \frac{5.4 \times 10^{-7}\,(SpGr)\,(T)\,(Q)^2}{(Cv)^2\,(P_2)}$$

WHERE:

- Q = Flow in SCFH
- ΔP = Pressure drop (psig)
- SpGr = Specific gravity (based on air = 1.0)
- P2 = Outlet pressure–psia (psig + 14.7)
- T = (temp. °F + 460)
- C_v = Valve constant

CAUTION: The gas equation shown, is valid at very low pressure drop ratios. The gas equation is NOT valid when the ratio of pressure drop (ΔP) to inlet pressure (P1) exceeds 0.02.

NOTE: Only use the gas equation shown if (P1-P2)/P1 is less than 0.02.

Cv FACTORS FOR APOLLO VALVES (continued on M-4)

VALVE	SIZE (IN.)														
	1/4	3/8	1/2	3/4	1	1.25	1.5	2	2.5	3	4	6	8	10	12
70B-140 Series	8.4	7.2	15	30	43	48	84	108	190	370	670	--	--	--	--
70-100/200 Series	8.4	7.2	15	30	43	48	84	108	190	370	670	--	--	--	---
70-300/400 Series	--	--	15	30	43	48	84	108	--	--	--	--	--	--	--
70-600 Series	2.3	4.5	5.4	12	14	21	34	47	--	--	--	--	--	--	--
70-800 Series	8.4	7.2	15	30	43	48	84	--	--	--	--	--	--	--	--
71-AR Series	--	--	--	30	43	48	84	108	190	370	--	--	--	--	--
71-100/200 Series	--	--	--	30	43	48	84	108	190	370	--	--	--	--	--
72-100/900 Series	--	--	26	48	65	125	170	216	--	--	--	--	--	--	--
72-1xx-A/72-9xx-A Series	--	--	26	48	65	125	170	245	--	--	--	--	--	--	--
73A-100 Series	8.4	7.2	15	30	43	48	84	108	--	--	--	--	--	--	--
73-300/400 Series	--	--	26	48	65	125	170	216	--	--	--	--	--	--	--
74-100 Series	8.4	7.2	15	30	43	48	84	108	190	370	670	--	--	--	--
75-100 Series	8.4	7.2	15	30	43	48	84	108	190	370	670	--	--	--	--
76-AR Series	8.4	7.2	15	30	43	48	84	108	190	370	670	--	--	--	--
76F-100 Series	8.1	15	15	51	68	125	177	389	--	--	--	--	--	--	--
76FJ-100 Series	8.1	15	15	51	68	125	177	389	--	--	--	--	--	--	--
76FK-100 Series	8.1	15	15	51	68	125	177	389	--	--	--	--	--	--	--
76-100 Series	8.4	7.2	15	30	43	48	84	108	190	370	--	--	--	--	--
76-300/400 Series	--	--	26	48	65	125	170	216	--	--	--	--	--	--	--
76-600 Series	2.3	4.5	5.4	12	14	21	34	47	--	--	--	--	--	--	--
76J-100 Series	8.4	7.2	15	30	43	48	84	108	190	370	--	--	--	--	--
76J-AR Series	8.4	7.2	15	30	43	48	84	108	190	370	670	--	--	--	--
76K-100 Series	8.4	7.2	15	30	43	48	84	108	190	370	--	--	--	--	--
76K-AR Series	8.4	7.2	15	30	43	48	84	108	190	370	670	--	--	--	--
7K-100 Series	--	--	15	51	68	125	177	389	503	--	--	--	--	--	--
77-AR Series	8.1	15	15	51	68	--	177	389	--	--	--	--	--	--	--

Cv FACTORS FOR APOLLO VALVES (continued from M-3)

VALVE	SIZE (IN.)														
	1/4	3/8	1/2	3/4	1	1.25	1.5	2	2.5	3	4	6	8	10	12
77C-100/200 Series	4.5	7.2	16	36	68	125	177	389	503	--	--	--	--	--	--
77D-140 Series	4.5	7.2	16	36	68	125	177	389	--	--	--	--	--	--	--
77D-640 Series	--	--	--	11	24	35	--	--	--	--	--	--	--	--	--
77G-UL Series	4.5	7.2	16	36	68	125	177	389	503	--	--	--	--	--	--
77W Series	--	--	16	36	68	125	177	389	--	--	--	--	--	--	--
77-100/200 Series	8.1	15	15	51	68	125	177	389	503	--	--	--	--	--	--
79 Series	8.5	8.5	9.8	32	44	66	148	218	440	390	--	--	--	--	--
80 Series	8.4	7.2	15	30	43	48	84	108	190	370	--	--	--	--	--
82-100/200 Series	8.1	14	26	51	68	120	170	376	510	996	1893	--	--	--	--
83A/83B Series	8.1	14	26	51	68	120	170	376	--	--	--	--	--	--	--
83R-100/200 Series	--	--	--	--	--	--	170	376	--	996	1893	--	--	--	--
86A/86B Series	8.1	14	26	51	68	120	170	376	--	--	--	--	--	--	--
86R-100/200 Series	--	--	--	--	--	--	170	376	--	996	1893	--	--	--	--
87A-100 Series	--	--	--	--	--	--	86	104	234	375	673	1099	1902	3890	--
87A-200 Series	--	--	15	19	75	--	195	410	545	1021	2016	4837	9250	15170	22390
87A-700 Series	--	--	--	--	--	--	86	104	234	375	673	1099	1902	3890	--
87A-900 Series	--	--	15	19	75	--	195	410	545	1021	2016	4837	9250	15170	22390
87A-F00 Series	--	--	--	--	75	--	195	410	545	1021	2016	4837	--	--	--
87B-100 Series	--	--	--	--	--	--	--	--	--	375	673	1099	1902	3890	--
87J-100 Series	--	--	--	--	--	--	86	104	234	375	673	1099	1902	3890	--
87J-200 Series	--	--	15	19	75	--	195	410	545	1021	2016	4837	9250	15170	22390
87J-700 Series	--	--	--	--	--	--	86	104	234	375	673	1099	1902	3890	--
87J-900 Series	--	--	15	19	75	--	195	410	545	1021	2016	4837	9250	15170	22390
87K-100 Series	--	--	--	--	--	--	86	104	234	375	673	1099	1902	3890	--
87K-200 Series	--	--	15	19	75	--	195	410	545	1021	2016	4837	9250	15170	22390
87K-700 Series	--	--	--	--	--	--	86	104	234	375	673	1099	1902	3890	--
87K-900 Series	--	--	15	19	75	--	195	410	545	1021	2016	4837	9250	15170	22390
88A-100 Series	--	--	--	--	--	--	86	104	234	375	673	1099	1902	3890	--
88A-200 Series	--	--	15	19	75	--	195	410	545	1021	2016	4837	9250	15170	22390
88A-700 Series	--	--	--	--	--	--	86	104	234	375	673	1099	1902	3890	--
88A-900 Series	--	--	15	19	75	--	195	410	545	1021	2016	4837	9250	15170	22390
88A-F00 Series	--	--	--	--	75	--	195	410	545	1021	2016	4837	--	--	--
88B-100 Series	--	--	--	--	--	--	--	--	--	375	673	1099	1902	3890	--
89-100 Series	8.4	7.2	15	30	43	48	84	108	190	370	--	--	--	--	--
9A-100 Series	8.3	6.7	5.7	10	16	25	40	62	--	--	--	--	--	--	--
90-100 Series	8.3	6.7	5.7	10	16	25	40	62	--	--	--	--	--	--	--
92-100 Series	8.3	6.7	5.7	10	16	25	40	62	--	--	--	--	--	--	--
93-100 Series	8.3	6.7	5.7	10	16	25	40	62	--	--	--	--	--	--	--
94A-100/200 Series	6	7	19	34	50	104	268	309	629	1018	1622	--	--	--	--
96-100 Series	8.3	6.7	5.7	10	16	25	40	62	--	--	--	--	--	--	--
399-100 Series	8.4	7.2	15	30	43	48	84	108	190	370	--	--	--	--	--
489-100 Series	8.4	7.2	15	30	43	48	84	108	190	370	--	--	--	--	--

400 CWP BRONZE ASTM B584-C84400 GRAPH 3

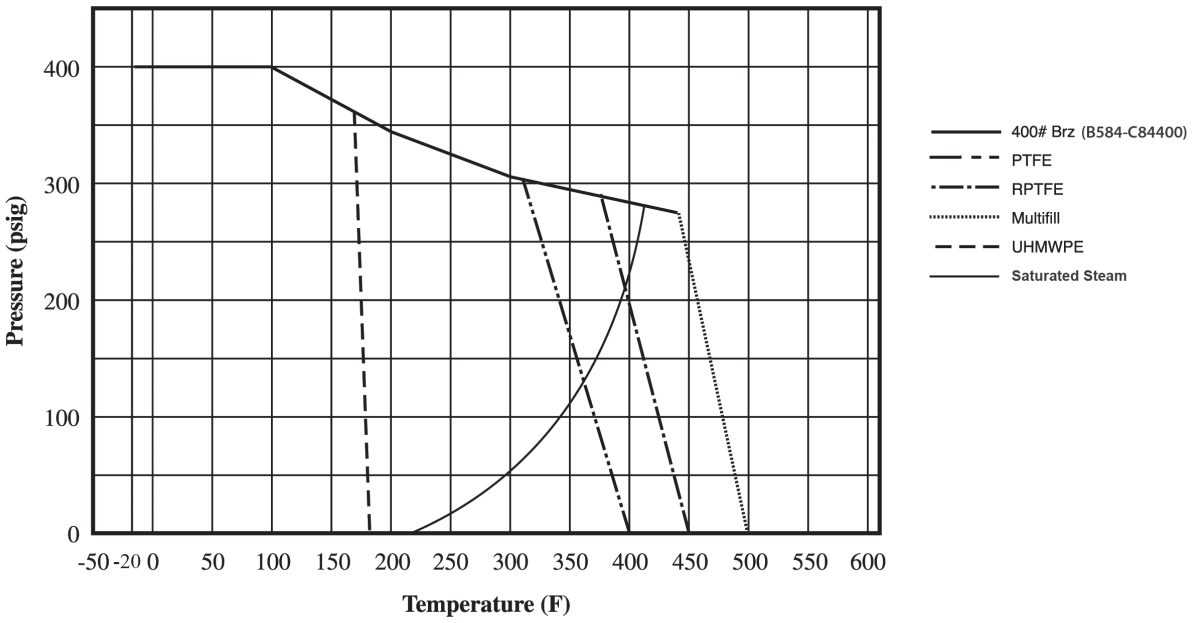
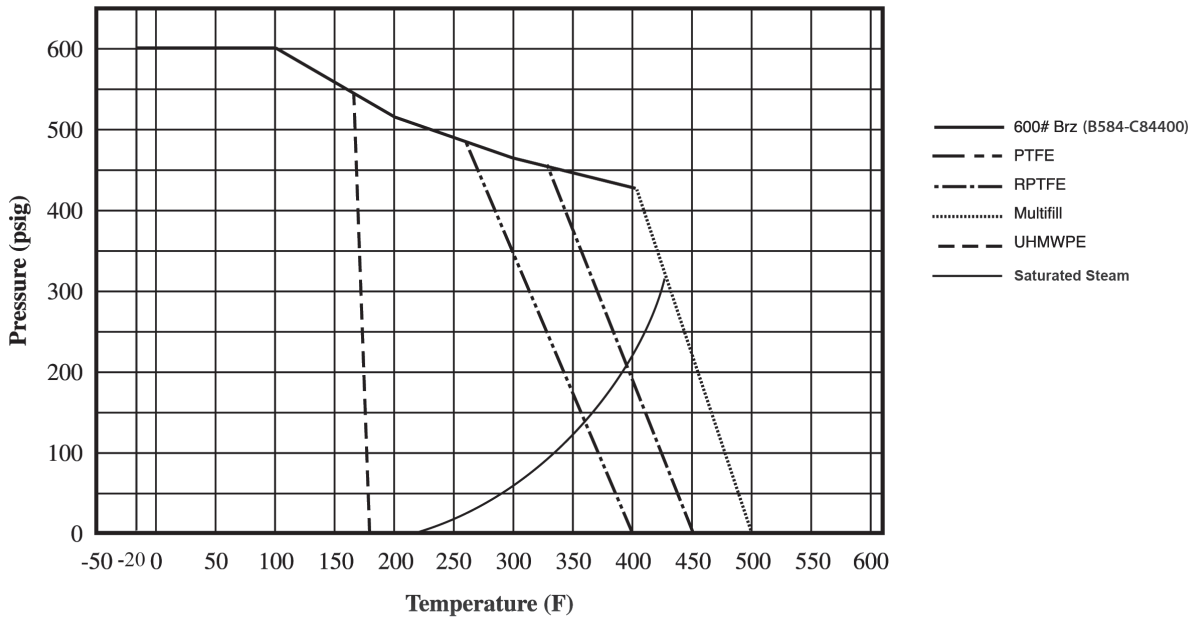
600 CWP BRONZE ASTM B584-C84400 GRAPH 4