UNIVERSAL STRUT CLAMP

550-212 SERIES TD+™

ITEM # SUBMITTED_____

JOB NAME_____

LOCATION _____

ENGINEER_____

CONTRACTOR_____

PO#_____ TAG _____

SPECIFICATION

Sioux Chief 550-212 series TD+™ universal strut clamp shall insulate or secure any pipe or conduit ranging from ½" CTS to 2" IPS wherever 1-5/8" strut channel is used. Variable clamping tension allows for expansion and contraction. Clamp and cushions shall be compatible with copper, PEX and CPVC. Strut foot on clamp shall include two metal inserts to allow metal-to-metal contact on inside wall of channel to prevent clamp from slipping. Additional height or offset distance from channel shall be obtained by stacking bridges. Clamp shall be corrosion proof.

When necessary, optional self-adhesive noise reducing cushions shall be applied to base and bridge prior to installing pipe in order to meet any acoustical requirements appearing on job specs. Sioux Chief's strut clamp does not require tools. Clamps shall be IAPMO listed.

550-2121

550-2122Q

INSTALLATION

Insert strut clamp into top of channel strut and twist to lock clamp in place. Lay pipe in base of clamp and ratchet clamp's top bridge over pipe to secure. Additional bridges may be stacked on top of pipe as necessary to install multiple lines.

To install optional acoustical cushions remove paper to expose adhesive. Install one cushion on top of base and on bottom of bridge. For multiple lines, install cushion on top of each bridge and stack as needed. Adhesive is designed to hold cushion in place until bridge is engaged securely on pipe.

While Sioux Chief does not recommend installations where the clamp is inverted hanging beneath the strut, in these instances the maximum safe working load is 70 lbs.

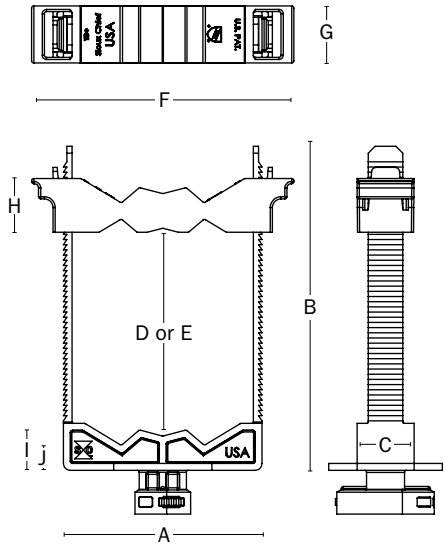

MATERIALS

Clamp & bridge: 100% corrosion proof virgin nylon 66, U.V. protected, UL94 V-2 rated
Cushion: TPE 38 durometer

TEMPERATURE AND SAFE WORKING LOAD

–10°F – 130°F	150 lbs.
131°F – 180°F	105 lbs.
181°F – 220°F	70 lbs.

DIMENSIONS

A:	Clamp width	2.875"	**F:**	Bridge width	3.8"
B:	Clamp height	4.67"	**G:**	Bridge depth	0.825"
C:	Clamp depth	0.825"	**H:**	Bridge height	0.779"
D:	Clamp range	.240" – 3.285"	**I:**	Clamp offset	0.497"
E:	Clamp range w/ cushions	.240" – 3.085"	**J:**	Clamp offset	0.37"

Made in USA

Create Item Number

550-212AB

e.g. 550-2122Q: PipeDown™ Acoustical Universal Strut Clamp with 2 bridges & 4 cushions

BRIDGE A
- ☐ **1** = One bridge
- ☐ **2** = Two bridges

CUSHION B
- ☐ _ = Blank (no cushions)
- ☐ **Q** = Two cushions/bridge