WEIL-McLAIN

Ultra

Gas-fired water boilers – Series 3

Featuring UControl *Flexibility*

Boiler Manual

- Installation
- Maintenance
- Startup
- Parts



ENERGY STAR

WARNING This manual must only be used by a qualified heating installer/service technician. Read all instructions, including this manual and all other information shipped with the boiler, before installing. Perform steps in the order given. Failure to comply could result in severe personal injury, death or substantial property damage.

Part number 550-100-066/0608

The *Ultra* Gas-fired water boiler, Featuring *U*control Flexibility

1. Cast aluminum heat exchanger

2. Heat exchanger access cover

3. Blower

The advanced blower design and air inlet silencer on Ultra boilers result in very quiet operation.

Models Ultra-80 & 105 — Air enters the boiler enclosure through the air intake adapter (18), flows through the enclosure, enters the air inlet silencer (5), then enters the blower. The blower pulls air through the silencer and pushes it into the venturi (6), where it mixes with gas before entering the burner.

Models Ultra-155, 230 & 310 — Air enters the boiler enclosure through the air intake adapter (18), flows through the enclosure, enters the air inlet silencer (5), then enters the venturi (6). The blower pulls air and gas through the venturi and pushes the mixture into the burner.

4. Gas valves and sense lines

The automatic gas valve (4a) senses the vacuum in the venturi caused by flowing air, and allows gas to flow when power is applied. The manual gas valve (4b) allows shutting off the gas supply for servicing or shutdown. Models 80 and 105 use a sensing line (4c) from the gas valve to the blower outlet so the gas valve references the same pressure as the venturi inlet.

5. Air inlet silencer

The horn-shaped air inlet silencer significantly reduces fan noise, providing exceptionally quiet operation.

6. Venturi

When air flows through the venturi, it creates a vacuum. This vacuum pulls gas from the gas valve. So gas will only flow if air is flowing. On 80 and 105 models, the gas/air mixture enters the burner after the venturi. On 155, 230, and 310 models, the gas/air mixture enters the blower before passing on to the burner.

7. Outlet water temperature dual sensor

This sensor monitors boiler outlet water temperature. The control module adjusts boiler firing rate so the outlet temperature is correct, based on boiler outlet and system supply temperatures.

8. Boiler return water temperature sensor

This sensor monitors return water temperature. The control module reduces or increases boiler input, depending on how close the return water temperature is to the outlet water temperature.

9. Temperature and pressure gauge

10. Electronic display & buttons

The electronic display is used to configure boiler settings and monitor boiler operation.

The buttons allow changing display mode, entering setting values, and resetting after lockout.

11. Flue pipe adapter

12. Burner (not shown)

Made with high-grade stainless steel construction, the burner uses premixed air and gas. The burner and control provide modulating firing.

13. Water outlet pipe (system supply)

14. Water return pipe (system return)

15. Gas connection pipe

16. *U-Control* Module

The ***U-Control*** Module responds to signals from the room thermostats, DHW aquastats (when used), boiler sensors (boiler return, boiler supply, system return, system supply, flue temperature, and outdoor temperature, if used). The control module automatically adjusts blower speed (and gas flow rate) to match boiler output to space heating and/or DHW heating demand.

17. Swing-away control panel assembly

The Ultra control panel is mounted to a hinged subpanel, allowing the panel to be swung forward and down for easy access to the electrical connections.

18. Air intake adapter

19. Electrical entrance

Knockouts are provided in the jacket top panel, allowing conduit entry directly behind the control panel or near the wall.

20. Boiler drain valve

21. Line voltage receptacle

Use this connection to plug in line voltage meters or tools while working on boiler. It can also be used for connecting a condensate pump. Do not exceed 10-amp load.

22. P/T gauge temperature sensor well

The remote sensor for the panel-mounted pressure/temperature gauge inserts into the outlet water pipe here.

23. Flue gas condensate drain

Connect the boiler internal condensate trap line to the heat exchanger here (parts supplied with boiler, but field installed).

24. Flue gas condensate drain connection

The condensate trap PVC fittings are field-installed, connected to the condensate trap line as shown in this manual.

25. Front door

The front door is sealed to the boiler assembly around its entire perimeter.

26. Knurled-head jacket door retainer screws

Two knurled-head screws secure the door in place.

27. Ignition electrode/flame sensor

The burner flame is ignited by applying a high voltage to the ignition electrode. This causes a spark (from electrode to ground). After ignition, the electrode measures flame signal.

28. Flame inspection window

The quartz glass window provides a view of the burner surface and flame.

29. Flue gas dual sensor

This dual sensor monitors the flue gas exit temperature. The control module will shut down the boiler if flue gas temperature gets too hot. This protects the flue pipe and the heat exchanger from overheating.

30. ON/OFF switch

The *Ultra* Gas-fired water boiler, Featuring *U*Control Flexibility

Front view (all models)

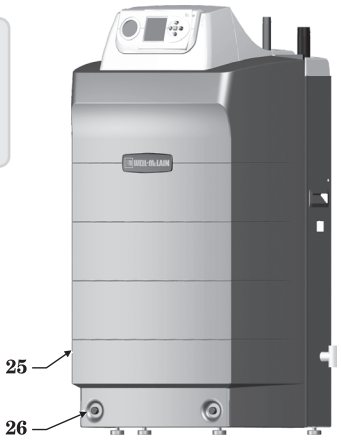

Top view (all models)

Top is shown with top cover removed and control panel swung down for easy access to wiring terminals.

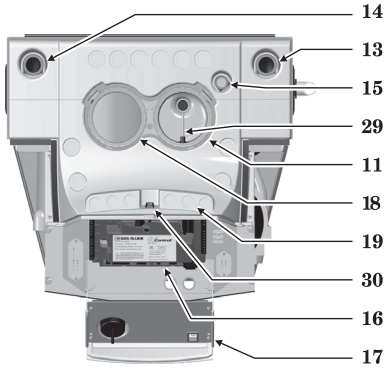

Ultra-80 & 105 (front door removed)

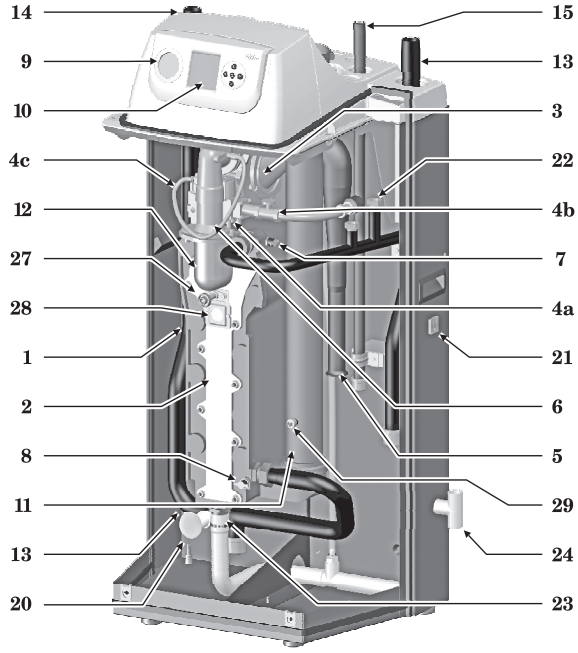

Ultra-155 & 230 (front door removed)

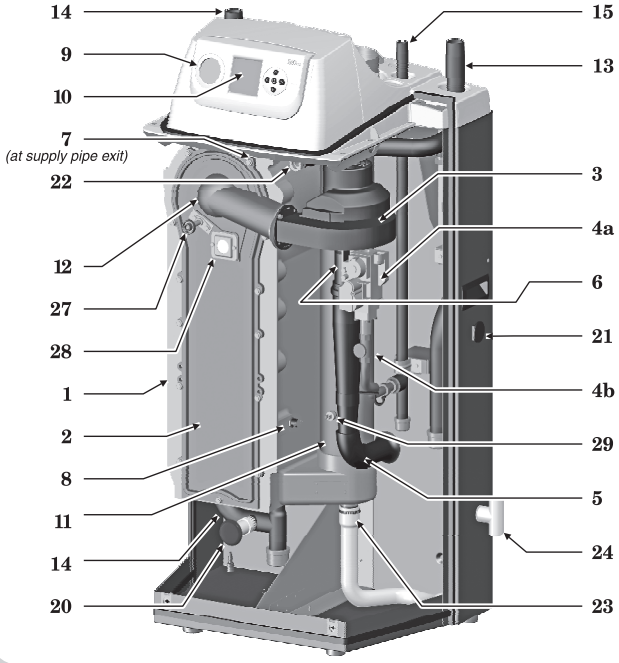

Ultra-310 (front door removed)

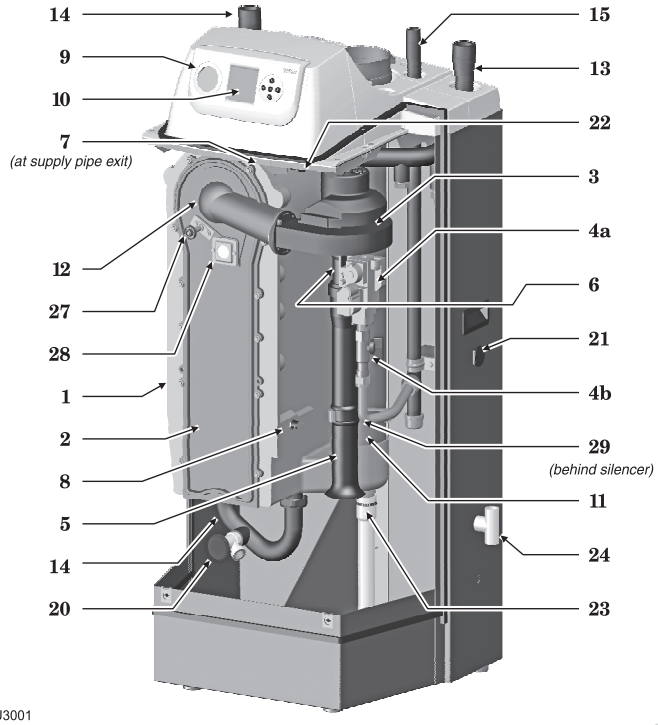

U3001

Contents

Hazard definitions 4
Please read before proceeding 5
Prepare boiler location 6
Prepare boiler 9
Install water piping 14
Multiple boiler water piping 24
Appliances remaining on an existing vent system . . 29
Air piping — general 30
Venting/air piping — general 31
Sidewall vent/air termination: Weil-McLain plate . . . 33
Sidewall vent/air termination: 3" PVC concentric. . . 36
Sidewall vent/air termination: Separate pipes 39
Vertical vent/air termination: 3" PVC concentric . . . 42
Vertical vent/air termination: Separate pipes 46
Install vent/air piping — boiler to termination 48
Install condensate line 50
Gas piping 52
Field wiring. 54
U-Control operation and setup 59
Startup — fill the system 70
Startup — final checks 73
Check-out/startup verification 77
Installation and Service Certificate. 77
Annual startup and general maintenance 78
Annual startup 79
Troubleshooting 84
Maintenance 89
Replacement parts 92
Dimensions 104
Ratings — Ultra boilers 105
Ratings — multiple Ultra boilers 106

Hazard definitions

The following defined terms are used throughout this manual to bring attention to the presence of hazards of various risk levels or to important information concerning the life of the product.

⚠ DANGER Indicates presence of hazards that will cause severe personal injury, death or substantial property damage.

⚠ WARNING Indicates presence of hazards that can cause severe personal injury, death or substantial property damage.

⚠ CAUTION Indicates presence of hazards that will or can cause minor personal injury or property damage.

NOTICE Indicates special instructions on installation, operation or maintenance that are important but not related to personal injury or property damage.

Part number 550-100-066/0608

Please read before proceeding

⚠WARNING **Installer**— Read all instructions, including this manual and all other information shipped with the boiler, before installing. Perform steps in the order given.

User — This manual is for use only by a qualified heating installer/service technician. Refer to User's Information Manual for your reference.

User — Have this boiler serviced/inspected by a qualified service technician, at least annually.

Failure to comply with the above could result in severe personal injury, death or substantial property damage.

NOTICE When calling or writing about the boiler— Please have the boiler model number from the boiler rating label and the CP number from the boiler jacket.

You should write in the CP number in the space provided on the Installation certificate on page 77 if not already shown.

Consider piping and installation when determining boiler location.

Any claims for damage or shortage in shipment must be filed immediately against the transportation company by the consignee.

Commonwealth of Massachusetts

When the boiler is installed within the Commonwealth of Massachusetts:

- This product must be installed by a licensed plumber or gas fitter.
- If antifreeze is used, a reduced pressure backflow preventer device shall be used.

⚠WARNING Failure to adhere to the guidelines on this page can result in severe personal injury, death or substantial property damage.

When servicing boiler —

- To avoid electric shock, disconnect electrical supply before performing maintenance.
- To avoid severe burns, allow boiler to cool before performing maintenance.
- This boiler contains ceramic fiber and fiberglass materials. Refer to the WARNING and instructions on page 79.

Boiler operation —

- Do not block flow of combustion or ventilation air to boiler.
- Should overheating occur or gas supply fail to shut off, do not turn off or disconnect electrical supply to circulator. Instead, shut off the gas supply at a location external to the appliance.
- Do not use this boiler if any part has been under water. Immediately call a qualified service technician to inspect the boiler and to replace any part of the control system and any gas control that has been under water.

Boiler water —

- The Ultra heat exchanger is made of aluminum, and requires that system pH always be between 7.0 and 8.5 and water chemistry be checked. Chemical treatment may be necessary. See page 71 for details.
- Thoroughly flush the system (without boiler connected) to remove sediment. The high-efficiency heat exchanger can be damaged by build-up or corrosion due to sediment.
- Do not use petroleum-based cleaning or sealing compounds in boiler system. Gaskets and seals in the system may be damaged. This can result in substantial property damage.
- Continual fresh make-up water will reduce boiler life. Mineral buildup in heat exchanger reduces heat transfer, overheats the aluminum heat exchanger, and causes failure. Addition of oxygen carried in by make-up water can cause internal corrosion. Leaks in boiler or piping must be repaired at once to prevent make-up water. Use this boiler ONLY in a closed-loop system.
- Do not add cold water to hot boiler. Thermal shock can cause heat exchanger to crack.

Freeze protection fluids —

NEVER use automotive or standard glycol antifreeze, even glycol made for hydronic systems. Use only freeze-protection fluids recommended in this manual (see page 71). Follow all guidelines given. Thoroughly clean and flush any replacement boiler system that has used glycol before installing the new Ultra boiler.

Prepare boiler location

Installations must comply with:

- Local, state, provincial, and national codes, laws, regulations and ordinances.
- National Fuel Gas Code, ANSI Z223.1 – latest edition.
- Standard for Controls and Safety Devices for Automatically Fired Boilers, ANSI/ASME CSD-1, when required.
- National Electrical Code.
- For Canada only: B149.1 or B149.2 Installation Code, CSA C22.1 Canadian Electrical Code Part 1 and any local codes.

NOTICE The Ultra boiler gas manifold and controls met safe lighting and other performance criteria when boiler underwent tests specified in ANSI Z21.13 — latest edition.

Before locating the boiler, check:

1. Check for nearby connection to:
   - System water piping
   - Venting connections
   - Gas supply piping
   - Electrical power
2. Check area around boiler. Remove any combustible materials, gasoline and other flammable liquids.

⚠WARNING Failure to keep boiler area clear and free of combustible materials, gasoline and other flammable liquids and vapors can result in severe personal injury, death or substantial property damage.

3. The Ultra boiler must be installed so that gas control system components are protected from dripping or spraying water or rain during operation or service.
4. If new boiler will replace existing boiler, check for and correct system problems, such as:
   - System leaks causing oxygen corrosion or heat exchanger cracks from hard water deposits.
   - Incorrectly-sized expansion tank.
   - Lack of freeze protection in boiler water causing system and boiler to freeze and leak.

Provide clearances:

Clearances from combustible materials

1. Hot water pipes — at least ½" from combustible materials.
2. Vent pipe — at least 3⁄16" from combustible materials.
3. See Figure 1 for other clearance minimums.

Figure 1 Clearances required

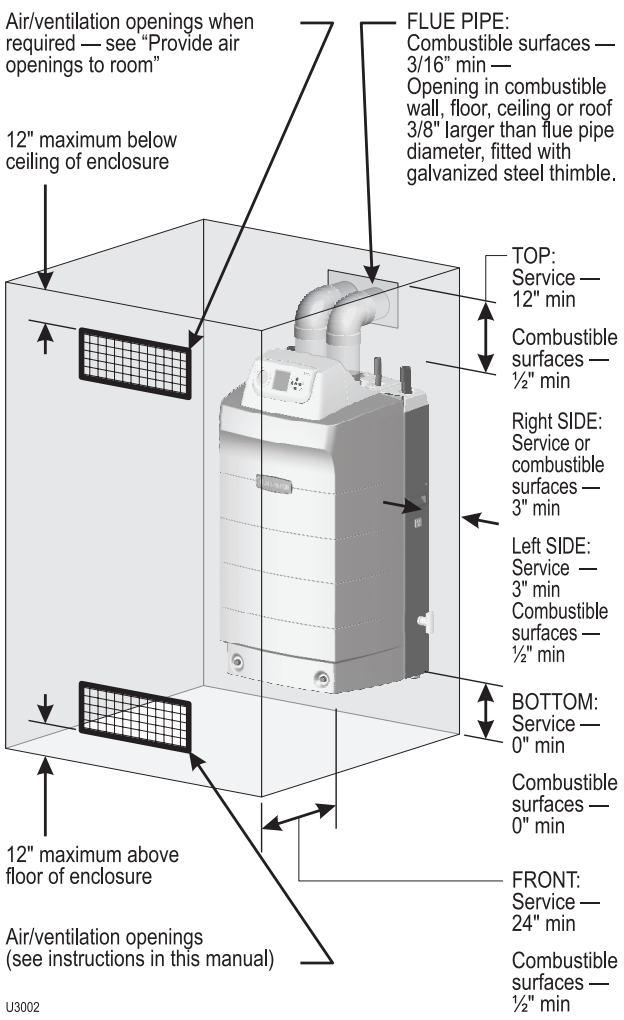

Clearances for service access

1. See Figure 1 for recommended service clearances. If you do not provide minimum clearances shown, it might not be possible to service the boiler without removing it from the space.

Wall mounting option

1. Ultra boilers can be wall mounted (using special wall mount kit) or floor mounted. No clearance is required at the rear of the unit, either for service or for clearance to combustible surfaces.

Prepare boiler location *(continued)*

Placing multiple boilers

1. Locate multiple boilers in boiler room according to:
   a. Figure 2 (side-to-side), or
   b. Figure 3 (back-to-back).
   c. Figure 4 (wall mounting).
2. Provide indicated clearances around boilers for access and servicing. If recommended dimensions are not possible, provide at least the minimum clearances given on page 6. Also follow local codes.
3. Construct boiler foundation if boiler room floor is uneven or if there is a danger of flooding. Size foundation to allow for clearance and spacing dimensions shown in either Figure 3 or Figure 4.
4. Chalkline boiler locations on foundation or boiler room floor.
5. Uncrate, assemble and mount boilers according to instructions in this manual.
6. Provide clearance for installation of venting, air piping, gas piping, expansion tank, primary circulator and other accessories.

Wall mounting *(Models 80 – 310)*

1. Ultra boilers may be wall mounted, following the instructions on page 11. (See Repair parts section for part number of wall mounting kit.)
2. When wall mounting boilers, provide approximately 6 inches between boilers for easy removal of boiler jacket door. See Figure 4.
3. Follow all applicable codes regarding piping, electrical connections and clearances.
4. When wall mounting boilers, verify the wall construction is suitable for the structural load. See page 11 for details.

Figure 2 Side-to-side mounting of multiple Ultra boilers

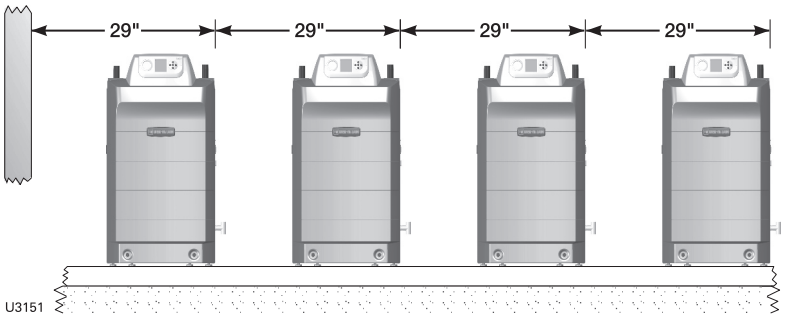

Figure 3 Back-to-back installation of multiple Ultra boilers

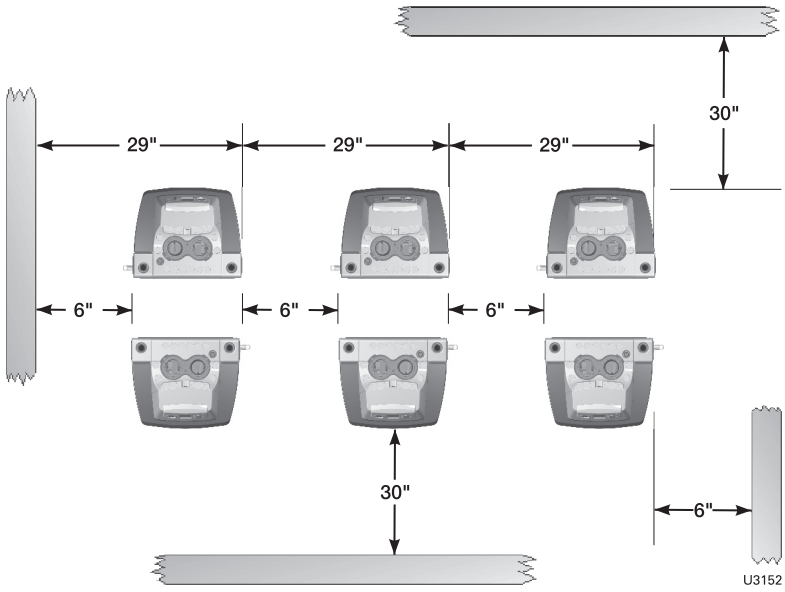

Figure 4 Wall mounting multiple Ultra boilers

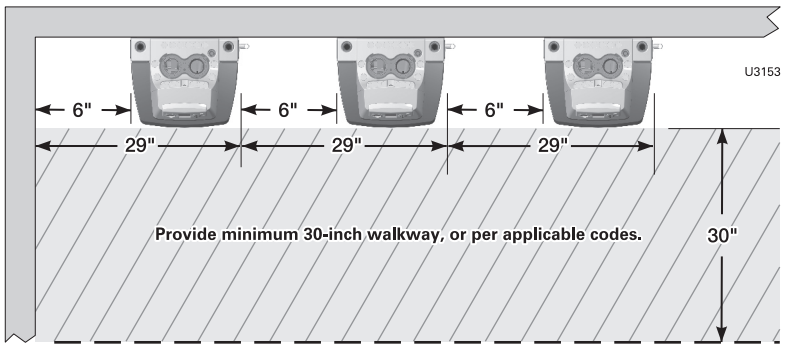

Prepare boiler location *(continued)*

Flooring and foundation

Flooring

1. The Ultra boiler is approved for installation on combustible flooring, but must never be installed on carpeting.

⚠WARNING Do not install boiler on carpeting even if foundation is used. Fire can result, causing severe personal injury, death or substantial property damage.

Foundation

1. Provide a solid foundation pad, at least 2 inches above the floor, if any of the following is true:
   - floor can become flooded.
   - the floor is dirt, sand, gravel or other loose material.
   - the boiler mounting area is severely uneven or sloped.
2. The minimum foundation size is:
   - Ultra-80 to -230: 24 inches wide x 20 inches deep.
   - Ultra-310: 24 inches wide x 23 inches deep
3. Foundation may be of wood, brick or concrete (minimum 2 inches thick) construction.
4. If flooding is possible, elevate boiler sufficiently to prevent water from reaching boiler.

Residential garage installation

Precautions

1. Take the following special precautions when installing the boiler in a residential garage. If the boiler is located in a residential garage, per ANSI Z223.1:
   - Mount the boiler with a minimum of 18 inches above the floor of the garage to the bottom of the boiler to ensure the burner and ignition devices will be no less than 18 inches above the floor.
   - Locate or protect the boiler so it cannot be damaged by a moving vehicle.

Provide air openings to room

Air openings — Ultra boiler alone in boiler room

1. No air ventilation openings into boiler room are needed when clearances around Ultra boiler are at least equal to the SERVICE clearances shown in Figure 1, page 6.
2. For spaces that do NOT supply this clearance, provide two openings as shown in Figure 1, page 6. Each opening must provide 1 square inch free area per 1,000 Btuh of boiler input.

Air openings — Ultra boiler in same space with other gas or oil-fired appliances

1. Follow the National Fuel Gas Code (U. S.) or CSA B149.1 and B149.2 (Canada) to size/verify size of the combustion/ventilation air openings into the space.

⚠WARNING The space must be provided with combustion/ventilation air openings correctly sized for all other appliances located in the same space as the Ultra boiler.

Reinstall boiler jacket front door after servicing. The boiler front door must be securely fastened to the boiler to prevent boiler from drawing air from inside the boiler room. This is particularly important if the boiler is located in the same room as other appliances.

Failure to comply with the above warnings could result in severe personal injury, death or substantial property damage.

2. Size openings only on the basis of the other appliances in the space. No additional air opening free area is needed for the Ultra boiler because it takes its combustion air from outside (direct vent installation).

Part number 550-100-066/0608

Prepare boiler

Vent and air piping (page 31)

1. The Ultra boiler requires a special vent system, designed for pressurized venting. Ultra boilers are rated ANSI Z21.13 Category IV (pressurized vent, likely to condense in the vent). See instructions beginning on page 31.
2. You must also install air piping from outside to the boiler air intake adapter. The resultant installation is categorized as direct vent (sealed combustion). Note prevention of combustion air contamination on page 30 when considering vent/air termination.
3. Vent and air must terminate near one another and may be vented vertically through the roof or out a side wall. You may use any of the vent/air piping methods covered in this manual. Do not attempt to install the Ultra boiler using any other means.
4. Be sure to locate the boiler such that the vent and air piping can be routed through the building and properly terminated. The vent/air piping lengths, routing and termination method must all comply with the methods and limits in instructions beginning on page 30.

Remove boiler from crate

⚠CAUTION Cold weather handling — If boiler has been stored in a very cold location (below 0°F) before installation, handle with care until the plastic components come to room temperature.

5. The Ultra boiler is generally easier to handle and maneuver after removing from crate.
6. After removing outer shipping carton from boiler, REMOVE jacket front door by loosening two knurled-head screws at lower front. Removing the door will prevent possible damage to the door during handling.
7. To remove boiler from pallet (after removing jacket front door):
   a. Remove the lag screws securing the shipping brackets.
   b. Unscrew the two rear boiler legs and remove the shipping brackets.
   c. Replace legs.
   d. Discard the cardboard protector insert on the rear of the boiler.

NOTICE Do not drop boiler or bump jacket on floor or pallet. Damage to boiler can result.

Prepare boiler for propane (when required)

Propane operation

⚠WARNING **Ultra boilers must be converted for propane operation unless specifically manufactured for propane**. Propane-ready boilers have suffix "LP" after the model number. All other boilers require conversion for propane operation.

Ultra-80 natural gas boilers require installation of a burner in addition to an orifice change. **DO NOT** use the instructions in this manual for these boilers. Use only the instructions included in the special-order conversion kits (See Figure 100, page 92).

Converting existing natural gas-fired boiler for propane — For a boiler already installed, you must turn off gas supply, turn off power and allow boiler to cool before proceeding. You must also completely test the boiler after conversion to verify performance and start up the boiler following instructions beginning on page 70 of this manual.

High altitude installations — For installations more than 5,500 feet above sea level, obtain the high altitude propane orifice kit. See Figure 100, page 92.

Verify orifice size — See Figure 5, page 10. Verify when installing that the orifice size marking matches boiler size. Use only the special-order **high altitude** orifice for altitudes above 5,500 feet.

Failure to comply could result in severe personal injury, death or substantial property damage.

Prepare boiler *(continued)*

Installing propane orifice

WARNING **If boiler is already installed** — You must turn off electrical supply to the boiler and close the external manual gas shut-off valve to isolate the boiler during conversion. Allow the boiler to cool if it has been operating. Following conversion of an installed boiler, follow all instructions in this manual to start up the boiler and verify operation of the boiler and all system components.

1. Locate propane orifice disc from conversion kit bag.
2. Verify that the stamping on the orifice disk matches the model size (see Figure 5).
3. With the new boiler on its back, remove jacket front door by removing two knurled head screws at lower front.
4. Lift the door away from boiler.
5. Remove the air inlet silencer from the adapter:
   a. Models 80 and 105: See Figure 105, page 97.
   b. Larger models: See Figure 107, page 99.
6. Disconnect the gas valve electrical plug.
7. See Figure 6 or Figure 7. Remove the 4 screws securing gas valve inlet adapter to valve.
8. Use a 5-mm wrench to remove the three Allen-head screws securing the gas valve to the venturi (Figure 6 or Figure 7).
9. Place orifice in the black rubber grommet in the side of the gas valve and secure in valve (Figure 6 or Figure 7).

DANGER See Figure 6 or Figure 7. Inspect the O-ring between the gas valve and gas valve inlet adapter whenever they are disassembled. The O-ring must be in good condition and must be installed. Failure to comply will cause a gas leak, resulting in severe personal injury or death.

10. Reposition gas valve against venturi and replace (3) Allen-head screws securing valve to venturi (Figure 6 or Figure 7).
11. See Figure 6 or Figure 7. Secure gas valve inlet adapter to gas valve with 4 screws. Make sure the plastic hose is connected from gas valve to inlet elbow on Ultra-80 and -105.

WARNING **DO NOT ATTEMPT TO MEASURE VALVE OUTLET PRESSURE.** The valve could be damaged by manometer fluid contamination. Failure to comply could result in severe personal injury, death or substantial property damage.

12. Connect gas valve electrical plug to valve terminals.
13. Re-attach the air inlet silencer.
14. After installation is complete, attach the propane conversion label (in conversion kit bag) next to the boiler rating plate.
15. Replace jacket front panel.

Figure 5 Orifice identification

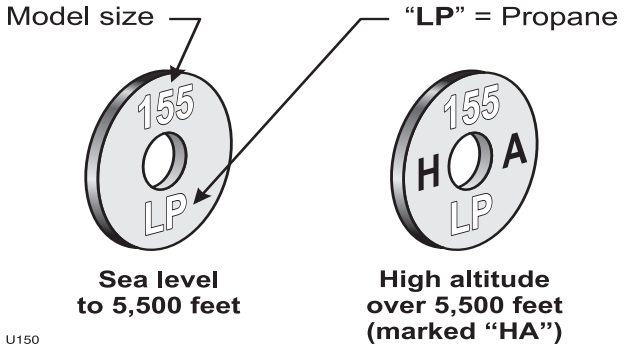

Figure 6 Installing propane orifice (Ultra-105 or Ultra-80LP ONLY)

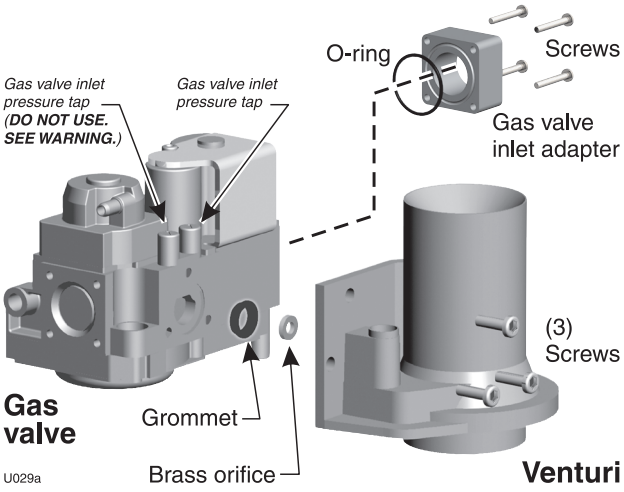

Figure 7 Installing propane orifice (Ultra-155, -210, -285, and -310)

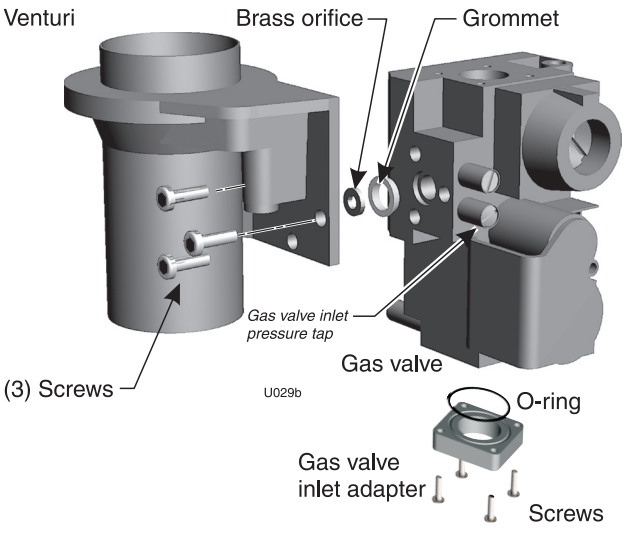

Prepare boiler *(continued)*

Placing floor-mounted boilers

1. Set boiler in place and check level.
   a. Adjust legs, if necessary to level boiler.

Wall-mounted boilers (Ultra-80 through -310)

1. The wall-mounting kit is NOT supplied as standard equipment with the boiler, and must be purchased separately. See **WARNING** below.

⚠WARNING Wall mount Ultra boilers only using the Weil-McLain Ultra boiler wall-mounting kit and accompanying instructions. (See Repair parts section for part number of wall mounting kit.) DO NOT use the shipping bracket to wall mount the boiler.

The wall must be vertically plumb and capable of carrying the weight of the boiler. The operating weights for wall-mountable boilers are:

Ultra-80: 139 pounds
Ultra-105: 145 pounds
Ultra-155: 181 pounds
Ultra-230: 192 pounds
Ultra-310: 229 pounds

Failure to comply with above and the procedure given below could result in severe personal injury, death or substantial property damage.

2. Verify kit contents:
   a. Wall-mount bracket.
   b. Black iron bushing, 1" x 1/8" NPT.
   c. Lag screws, (2) 3/8" x 3" hex head.
   d. Grommet, (1) 7/8" O.D & grommets, (2) 1 3/8" O.D.
   e. Automatic air vent, 1/8" NPT.
   f. Items b through e are needed only if routing piping through bottom of enclosure (applies only for Ultra-80 through -230).
   g. Verify all parts listed above are available before proceeding.
3. Stud spacing: Bracket holes are spaced for studs on 16-inch centers. For other stud spacing, provide secure, solid mounting surface on which to attach the boiler wall-mounting bracket.
4. Wood stud wall: Install bracket with lag screws (3/8" x 3") included in kit, only into the studs.
5. Metal stud wall: Secure bracket to studs with 3/16-inch toggle bolts and 3/16-inch flat washers (not included with kit).
6. **DO NOT** attempt to attach the wall mount bracket using anchors or any means other than directly securing to the wall studs (or equivalent wood structure if studs are not on 16-inch centers).
7. The boiler bracket must engage with the wall-mount bracket. Make sure the brackets are not just resting edge to edge.
8. Mount the boiler on the wall following these instructions. Perform all procedures given in the Boiler Manual on pages 1 through 9 before mounting the boiler.
9. The boiler is heavy. Use caution not to drop the boiler or cause bodily injury while lifting and handling. Verify that the boiler is securely attached to prevent possibility of boiler falling after installation.

Figure 8 **Ultra-80 through Ultra-230 only —** Install bottom-piping grommets if required

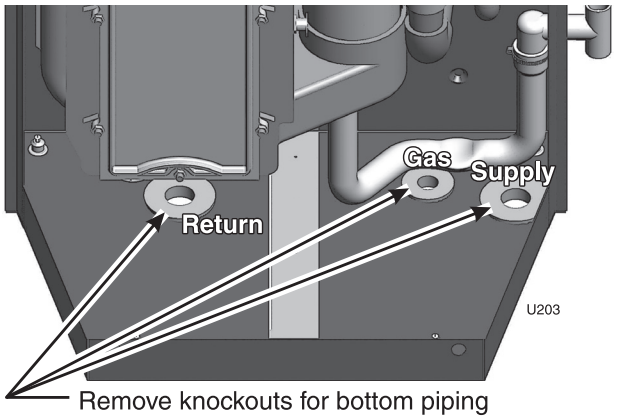

Remove knockouts for bottom piping penetrations. Insert grommets provided with wall-mounting kit.

Figure 9 Install wall-mount bracket

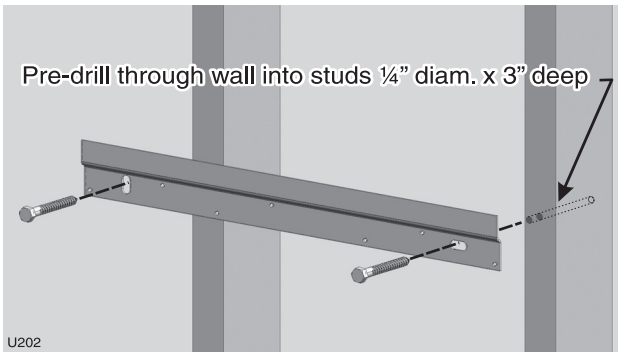

Figure 10 Place boiler on wall-mount bracket

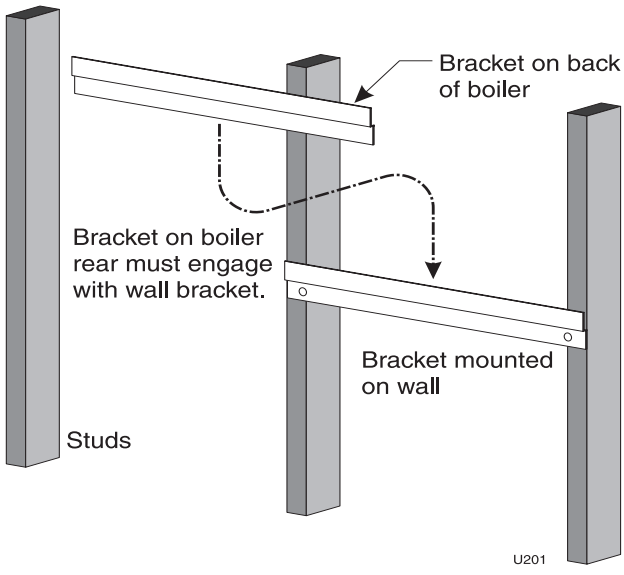

Prepare boiler *(continued)*

Prepare boiler for wall mounting

1. Remove the jacket front panel. This will simplify lifting and handling the boiler when mounting.
2. When piping will be routed out the top of the boiler, no special preparation is needed other than that given in this manual.
3. Ultra-80 to -230 only: To route the piping through the bottom of the boiler enclosure:
   a. Remove knockouts from bottom piping penetrations as shown in Figure 8, page 11.
   b. Insert grommets into the penetration holes as shown.

Install wall-mount bracket

1. Locate studs.
2. Place the wall-mount bracket on the wall, using a level to align correctly.
3. Place the bracket so the mounting slots are centered over the studs.
4. Level the bracket and trace the outline of the screw slots with a pencil.
5. Remove bracket and drill holes 1/4" diameter by 3 inches deep, centered on the screw slot outlines. (For metal stud walls, using 3/16" toggle bolts, drill required clearance holes.)
6. See Figure 9, page 11. Position bracket on wall. Insert and loosely tighten the two lag screws (or toggle bolts for metal studs).
7. Level the bracket. Then tighten screws securely. For drywall or plaster lathe installations, avoid tightening so much that brackets dig into wall surface.

Place boiler on bracket

1. Measure 30 3/4 inches below the bottom edge of the wall-mount bracket for Ultra-80 to -230 (35 5/8" for Ultra-310). Strike a line or place a piece of masking tape on the wall with its top edge even with the 30-inch mark. (This line, or tape, will indicate whether the boiler has been properly seated onto the wall-mount bracket.)
2. Obtain assistance to lift the boiler into position (see Figure 10, page 11):
   a. Lift the boiler high enough that its rear bracket will be above the wall-mount bracket.
   b. Let the rear of the boiler slide against the lag screw heads as you lower the boiler into place.
   c. When the brackets are engaged correctly, the bottom of the boiler enclosure will be at or near the pencil line, or tape, you applied in step 1.
   d. If the boiler does not slide down close to the mark, or tape, adjust until the brackets properly engage.

Piping through the bottom of the boiler

⚠WARNING Use two wrenches when tightening piping at boiler, using one wrench to prevent the boiler pipe from turning. Failure to support the boiler piping connections to prevent them from turning could cause damage to boiler components.

1. Use the following procedure to arrange piping through the bottom of the boiler.

Figure 11 Bottom-piping configuration only (Ultra-80 to -230 only)

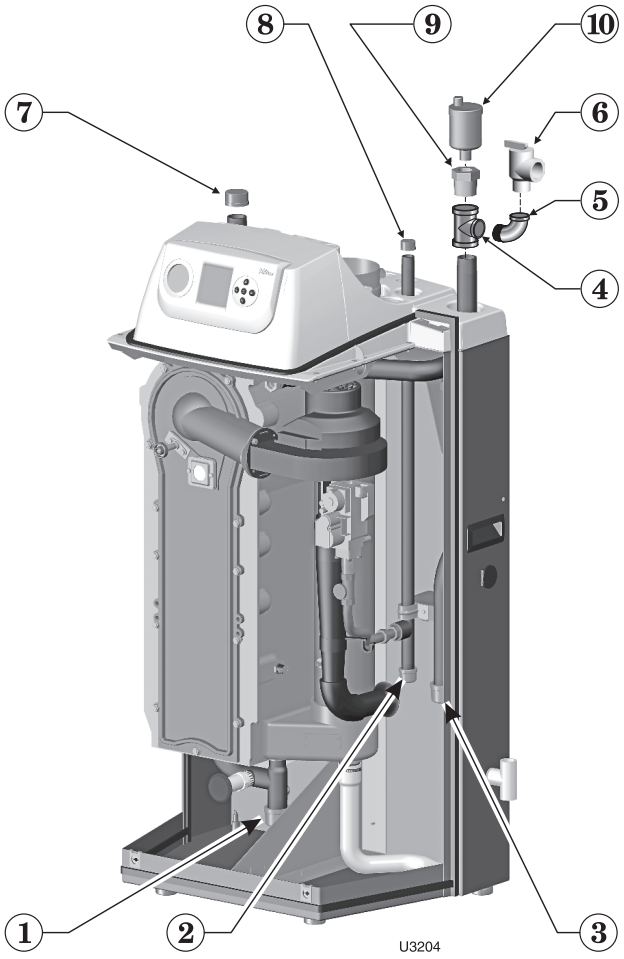

1. See Figure 11.
2. Remove pipe caps from bottoms of supply, return and gas lines to route piping through bottom.
3. Install:
   a. 1" pipe cap on top of return pipe (Figure 11, item 7).
   b. ½" pipe cap on top of gas line (Figure 11, item 8)
   c. 1" x 1" x ¾" tee (Figure 11, item 4).
   d. ¾" steel elbow (item 5), relief valve (item 6).
   e. 1" x 1/8" bushing (item 9).
   f. Air vent (item 10) on top of the supply pipe as shown.
4. See instructions beginning on page 14 to connect boiler piping. Connect piping to:
   a. 1" NPT male boiler return (Figure 11, item 1).
   b. 1" NPT male boiler outlet (item 3).
   c. ½" NPT male gas (item 2).

⚠WARNING DO NOT use automatic air vent on systems with closed-type expansion tanks. Instead, replace item 10 above with a line to the expansion tank.

Prepare boiler *(continued)*

⚠WARNING **DO NOT install a relief valve with a pressure higher than 30 PSIG**. This is the maximum allowable relief valve setting for the Ultra boiler.

Perform hydrostatic pressure test

Pressure test boiler before permanently attaching water or gas piping or electrical supply.

Prepare boiler for test

1. See Figure 12 for reference in following steps.
2. Remove supply line tee* and ¾" street elbow from accessory bag. Pipe to boiler supply connection as shown. Use pipe dope sparingly. (*1" x 1" x ¾" tee with Ultra-80 to -230 or 1¼" x 1¼" x ¾" tee with Ultra-310)
3. Temporarily plug the ¾" relief valve tapping in the street elbow with a ¾" NPT pipe plug.
4. Connect a hose to the boiler drain valve, the other end connected to a fresh water supply. Make sure the hose can also be used to drain the boiler after test.
5. Connect a nipple and shutoff valve to system supply connection on the supply tee. This valve will be used to bleed air during the fill. (Valve and nipple are not included with boiler.)
6. Connect a shutoff valve to system return connection. (Valve is not included with boiler.)
7. To avoid getting water on boiler, you may want to pipe street elbows on top of shutoff valves and attach catch-buckets beneath.
8. If convenient, install the boiler circulator and any other piping compatible with Figure 12 that would still allow bleeding air from shutoff valves.
9. Follow guidelines in this manual for piping components, locations and sizing.

Fill and pressure test

1. Open the shutoff valves you installed on supply and return connections.
2. Slowly open boiler drain valve and fresh water supply to fill boiler with water. The boiler will fill quickly because of its low water content.
3. When water reaches shutoff valves, close boiler drain valve.
4. Close shutoff valves.
5. Slowly reopen boiler drain valve until test pressure on the pressure/temperature gauge reaches at least 45 psig, but no higher than 55 psig.
6. Hold at test pressure for 10 minutes.

⚠WARNING Do not leave boiler unattended. A cold water fill could expand and cause excessive pressure, resulting in severe personal injury, death or substantial property damage.

7. Make sure constant gauge pressure has been maintained throughout test. Check for leaks. Repair if found.

⚠WARNING **Leaks must be repaired at once.** Failure to do so can damage boiler, resulting in substantial property damage.

Figure 12 Hydrostatic test piping connections

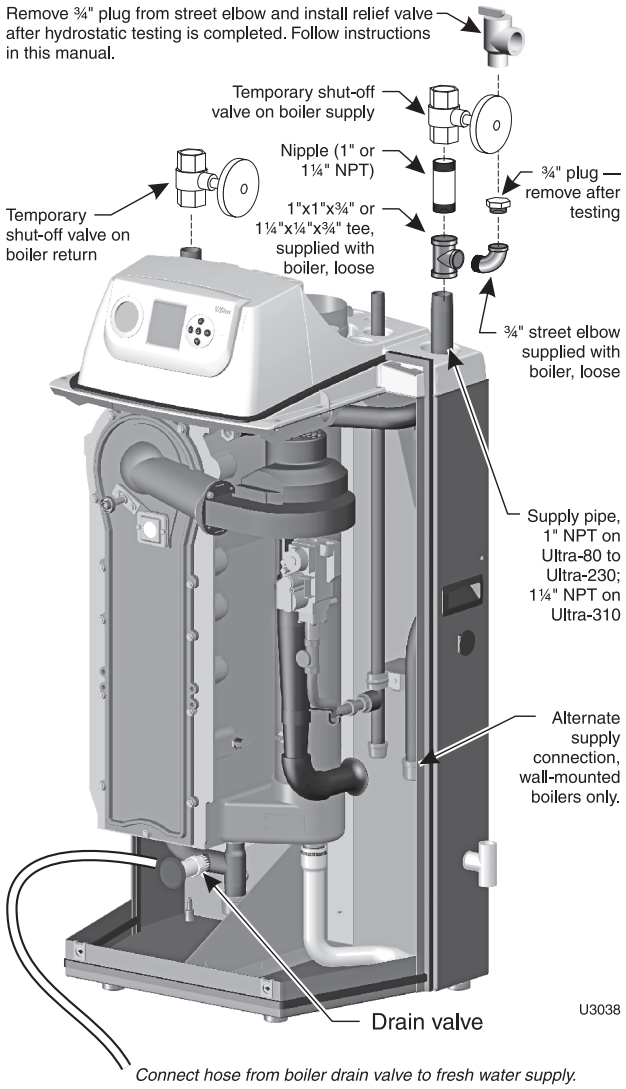

Connect hose from boiler drain valve to fresh water supply.

⚠WARNING Do not use petroleum-based cleaning or sealing compounds in boiler system. Gaskets and seals in the system may be damaged. This can result in substantial property damage.

Drain and remove fittings

1. Disconnect fill water hose from water source.
2. Drain boiler through drain valve. Remove hose after draining.
3. Remove nipples and valves unless they will remain for use in the system piping.
4. Remove plug from relief valve street elbow. See page 14 to install relief valve.

Install water piping

⚠WARNING Use two wrenches when tightening water piping at boiler, using one of the wrenches to prevent the boiler interior piping from turning. Failure to support the boiler piping connections to prevent them from turning could cause damage to boiler components.

General piping information

Additional controls, when required

NOTICE The U-Control module uses temperature sensors to provide both high limit protection and modulating temperature control. The U-Control module also provides low water protection by sensing the temperature of the heat exchanger. Some codes/jurisdictions may require additional external controls for high limit and/or low water cutoff protection.

Additional limit controls

Following standard industry practices, if installation is to comply with ASME or Canadian requirements, an additional high temperature limit may be needed. Consult local requirements for other codes/standards to determine if needed.

1. Install a manual reset high temperature limit constructed to prevent a temperature setting above 200°F in system supply piping between boiler and isolation valve. (Note that the U-Control module operating limit function shuts the boiler down at 195°F, or lower if set to a lower value.)

⚠WARNING **Multi-temperature systems** — If the heating system includes circuits that require lower temperature water (radiant slab circuits, for example) as well as higher temperature circuits, it is recommended to protect low-temperature circuits with limit controls that are wired to a U-Control external limit circuit (P13 terminals 1 and 2 for manual reset, or P13 terminals 3 and 4 for automatic reset).

2. See instructions beginning on page 54 for wiring information.
   a. Manual reset operation: If external limit controls are to cause **manual reset** of the U-control module, connect series-wired isolated contacts to P13 terminals 1 and 2 (see page 54 for wiring information).
   b. Automatic reset operation: If external limit controls are to cause **automatic reset** of the U-control module, connect series-wired isolated contacts to P13 terminals 3 and 4 (see page 54 for wiring information).
   c. If using a manual reset limit control or wiring in the manual reset circuit, set U-control boiler limit at least 20°F less than the external manual reset limit (i.e., set U-control no higher than 180°F for a 200°F external limit, for example).

Separate low water cutoff

1. A low water cutoff device is recommended when the boiler is installed above piping level, and may be required by certain state or local codes or insurance companies. Consult local requirements to determine. See the NOTICE above regarding the inherent protection provided by the U-Control module.
2. The U-Control's integral protection is accepted in many jurisdictions as meeting the requirement for low water protection. See page 57 for details.
3. When required, use a low water cutoff designed for water installations. Electrode probe-type is recommended. See Replacement parts section at the end of this manual for the Weil-McLain low water cut-off kit.
4. Purchase low water cutoff and install in a tee in the supply piping above boiler.
5. See field wiring instructions beginning on page 54 for wiring additional limit controls.

Backflow preventer

1. Use backflow check valve in cold water supply as required by local codes.

Install relief valve

1. Install relief valve in ¾" street elbow piped from boiler supply piping tee (Figure 12, page 13). Pipe the relief valve only as shown, in the location shown.
2. Connect discharge piping to safe disposal location, following guidelines in the **WARNING** below.

⚠WARNING **To avoid water damage or scalding due to relief valve operation, as per local or state codes:**

Discharge line must be connected to relief valve outlet and run to a safe place of disposal. Terminate the discharge line in a manner that will prevent possibility of severe burns or property damage should the valve discharge.

Discharge line must be as short as possible and be the same size as the valve discharge connection throughout its entire length.

Discharge line must pitch downward from the valve and terminate at least 6" above the floor drain where any discharge will be clearly visible.

The discharge line shall terminate plain, not threaded, with a material serviceable for temperatures of 375 °F or greater.

Do not pipe the discharge to any place where freezing could occur.

No shutoff valve shall be installed between the relief valve and boiler, or in the discharge line. Do not plug or place any obstruction in the discharge line.

Test the operation of the valve after filling and pressurizing system by lifting the lever. Make sure the valve discharges freely. If the valve fails to operate correctly, replace it with a new relief valve.

Failure to comply with the above guidelines could result in failure of the relief valve to operate, resulting in possibility of severe personal injury, death or substantial property damage.

Install water piping *(continued)*

System water piping methods

NOTICE All piping methods shown in this manual use primary/secondary connection to the boiler loop. These designs ensure proper flow through the Ultra boiler, for the most efficient and reliable operation of the boiler and the heating system. For other piping methods, consult your local Weil-McLain representative or see separate Ultra boiler piping guides.

Circulators

The boiler circulator (Taco 007 for Ultra-80 and -105; Taco 0014 for Ultra-155, -230, and -310) is shipped loose. Locate it in the return piping, as shown in the appropriate piping diagram in this manual.

⚠WARNING **DO NOT** use the boiler circulator in any location other than the ones shown in this manual. The boiler circulator is selected to ensure adequate flow through the Ultra boiler.

Install the boiler circulator only on the boiler return piping. This ensures the pressure drop through the boiler will not cause low pressure in the circulator intake.

Failure to comply could result in unreliable performance and nuisance shutdowns from insufficient flow.

Circulator flow rate

Size circulators based on the flow rate required to achieve the temperature change needed. You can closely estimate temperature rise (or drop) through a circuit by using the following formula, where TD is temperature rise (or drop), FLOW is flow rate (in gpm), and BTUH is the heat load for the circuit:

$$\text{FLOW} = \frac{\text{BTUH}}{\text{TD x 500}}$$

Example:

Consider a system loop for a system with total heating load equal to 210,000 Btuh. The desired temperature drop through the system piping is 20°F. Then the required flow rate is:

$$\text{FLOW} = \frac{210{,}000}{20 \text{ x } 500} = 21 \text{ gpm}$$

Circulator head requirement

The circulator must be capable of delivering the required flow against the head loss that will occur in the piping. Determine the pipe size needed, and the resultant head loss, using accepted engineering methods.

For typical residential applications, you can estimate the total equivalent piping length (TEL) of a circuit as 1.5 times the measured length of the circuit. Then use Figure 13 to determine the head loss for the circuit.

Sizing system water piping

1. See recommended piping layouts beginning on page 17. **As shown in these examples, the space heating system must be isolated from the boiler loop by the primary/secondary connection**.
2. Size the piping and components in the space heating system using Figure 13 or other recognized method. To use this table, select a pipe size with a flow rate just larger than that required. The head loss for the circuit is the value in the heading of the column selected. See the examples in the table notes.
3. For pipe sizes up to 2 inch, ensure a minimum flow velocity of 2 fps (feet per second) and a maximum of 4 fps. This ensures effective air removal and minimal noise. (For type M copper piping, this means flow rates of: 1-inch — 5.5 to 10.9 gpm; 1¼" — 8.2 to 16.3 gpm; 1½" — 11.4 to 22.9 gpm; 2" — 19.8 to 39.6 gpm.) For larger piping, size for a maximum head loss of 4 feet per hundred feet of pipe.

Figure 13 Head loss in type M copper pipe (140°F water)

Pipe size (inches)	Maximum recommended water flow rate in pipe (GPM) for head loss of either:	
	2.5 feet head loss per 100 feet of piping	4.0 feet head loss per 100 feet of piping
1	7	9
1¼	12	16
1½	19	23
2	40	not recommended (velocity more than 2 fps)
2½	70	91
3	112	146

Note:

Total head loss for a piping circuit equals the loss per 100 feet times the TEL (total equivalent length) of the circuit in feet. TEL includes head loss for valves and fittings in equivalent feet of piping (i.e., how much straight length of piping would cause the same head loss as the valve or fitting).

For example, if a piping circuit has a measure length of 250 feet, and includes valves and fittings with a total of 175 equivalent feet, the TEL for the circuit = 250 + 175 = 425 feet.

Examples:

Consider the circuit given above, with a TEL of 425 feet. If the flow rate required for the circuit is 21 gpm, as in the example at left, select a pipe size from above.

Using 1½-inch pipe would cause a head loss of 4.0 feet per 100 feet of piping. Since TEL is 425 feet, head loss would be:

Head loss = 4.0 x 425 / 100 = 4.0 x 4.25 = 17.0 feet

Using 2-inch piping would cause a head loss of 2.5 feet per 100 feet of piping. Since TEL is 425 feet, head loss would be:

Head loss = 2.5 x 425 / 100 = 2.5 x 4.25 = 12.3 feet.

Install water piping *(continued)*

Expansion tank and make-up water

1. Ensure expansion tank size will handle boiler and system water volume and temperature. Allow 3 gallons for boiler and its piping.

⚠CAUTION Undersized expansion tanks cause system water to be lost from relief valve and make-up water to be added through fill valve. Eventual boiler failure can result due to excessive make-up water addition.

2. Tank must be located as shown in this manual, or following recognized design methods. See tank manufacturer's instructions for details.
3. Connect the expansion tank to the air separator only if the separator is on the suction side of the circulator. Always install the system fill connection at the same point as the expansion tank connection to the system.
4. Most piping drawings in this manual show diaphragm expansion tanks. See Figure 14 for piping from air separator to expansion tank and make-up water line using a closed-type expansion tank.
5. Most chilled water systems are piped using a closed-type tank, as shown in Figure 19, page 21.

Diaphragm (or bladder) expansion tank

1. (Figure 14) Always install an automatic air vent on top of the air separator to remove residual air from the system.

NOTICE When using diaphragm or bladder tanks only — when the boiler is installed above the system main piping, install an automatic air vent in the top of the outgoing boiler piping to prevent air pocketing.

Closed-type expansion tank

1. See Figure 14, Alternate, for piping connections when using a closed-type expansion tank.
2. Pitch any horizontal piping up towards tank 1 inch per 5 feet of piping. Connect to tank with at least ¾" piping to allow room for air to rise.

⚠CAUTION DO NOT install automatic air vents on closed-type expansion tank systems. Air must remain in the system and return to the tank to provide its air cushion. An automatic air vent would cause air to leave system, resulting in water-logging the expansion tank.

Figure 14 Expansion tank piping

Piping to diaphragm (or bladder) expansion tank

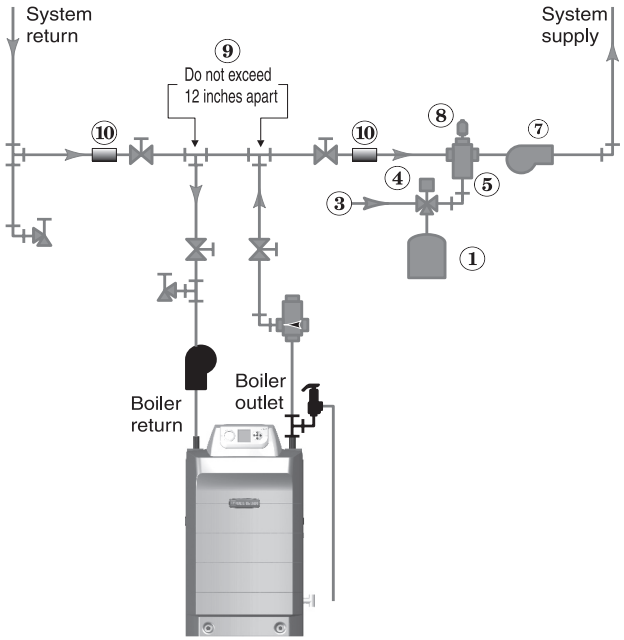

Alternate — Piping to closed-type expansion tank

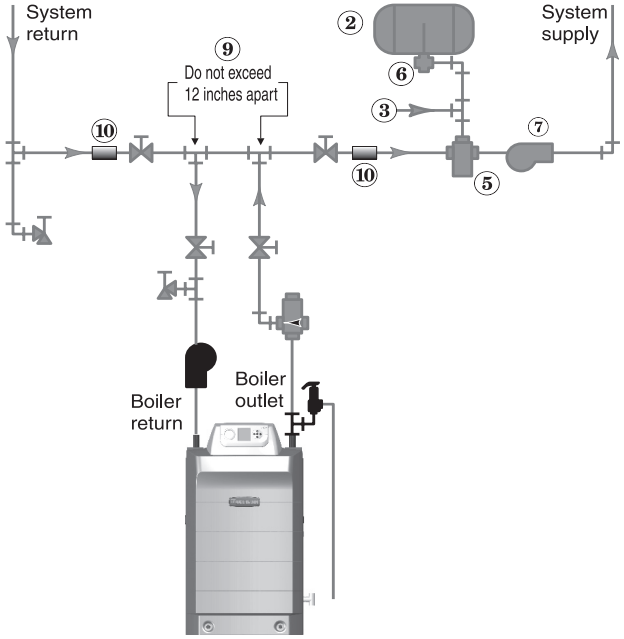

1. Diaphragm-type expansion tank
2. Closed-type expansion tank
3. Make-up water supply
4. Fill valve, typical
5. Air separator
6. Tank fitting
7. System circulator
8. Automatic air vent
9. Primary/secondary connection
10. System supply/return sensors

U3039

Install water piping *(continued)*

Zoning with zone valves

1. Connect boiler to system as shown in Figure 15 when zone valve zoning. The primary/secondary piping shown ensures the boiler loop will have sufficient flow. It also avoids applying the high head of the boiler circulator to the zone valves.
2. When using a closed-type expansion tank, connect the expansion tank and make-up water piping as shown in Figure 14, page 16.
3. Connect DHW (domestic hot water) piping to indirect storage water heater as shown.

NOTICE By default, the U-Control Module turns off space heating during DHW heating (if DHW input is priority 1). The boiler circulator will turn off, preventing hot water from circulating to the system (optional timeout setting can be used to override). The flow/check valve shown on the boiler outlet piping prevents gravity circulation in the boiler loop during DHW heating.

4. Controlling the circulators
   a. The U-Control can control up to three circulators (boiler circulator and two others). Refer to Field wiring, beginning on page 54, for instructions on wiring to circulators.
   b. The factory default settings are: DHW circulator as Circulator 1, boiler circulator as Circulator 2 and system circulator as Circulator 3. See Field wiring instructions, beginning on page 54, for details.

Figure 15 Zone valve zoning plus optional DHW piping

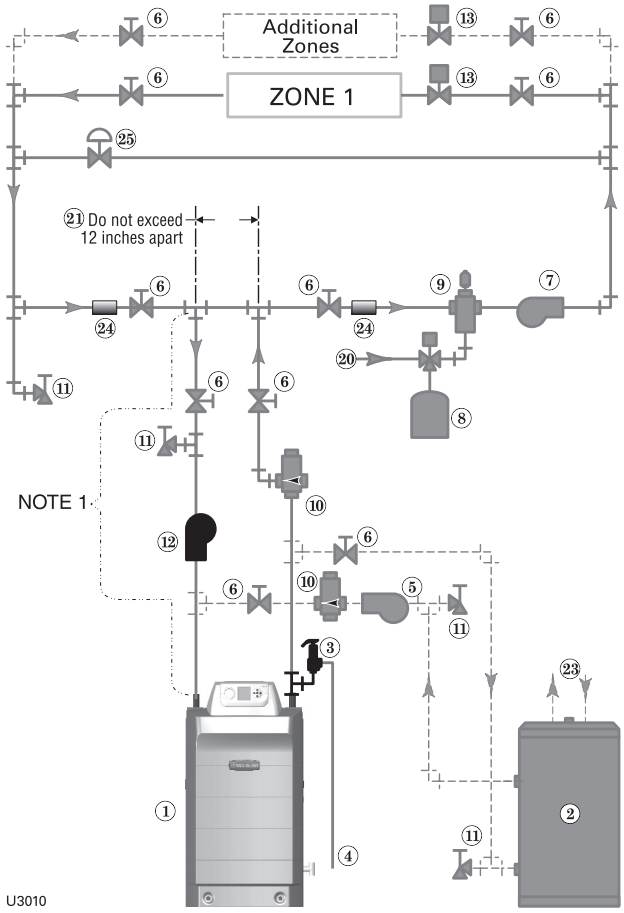

Legend — Figure 15

1	Ultra boiler
2	Indirect water heater (DHW), if used (see page 22)
3	Boiler relief valve (see page 14 for piping details)
4	Relief valve discharge piping (see page 14 for details)
5	DHW circulator (see page 22 for suggested sizing)
6	Isolation valves
7	System circulator (see information above for wiring)
8	Diaphragm (or bladder) type expansion tank (see page 22 for piping of closed-type expansion tank, if used)
9	Air separator [with automatic air vent only on systems using diaphragm (or bladder) type expansion tank]
10	Flow/check valves
11	Purge/drain valves
12	Boiler circulator
13	Zone valves, typical
20	Make-up water supply
21	Primary/secondary connection
24	Strap system supply and return sensors to lines as shown, at least 6 pipe diameters (but no more than 3 feet) from boiler connection tees.
25	Systems using high-head pumps may require a bypass pressure regulator to prevent damage to control valves.

■ Items supplied with boiler

▒ Items supplied by others

NOTE 1: **⚠ CAUTION** Use at least the following pipe sizes on all boiler loop piping (connecting boiler to and from the primary/secondary connection, item 21). Use only primary/secondary piping as shown. Failure to follow these guidelines could result in system problems.

- Ultra-80 or Ultra-105 – 1" or larger.
- Ultra-155 or -230 – 1¼" or larger.
- Ultra-310 – 1½" or larger.

Install water piping *(continued)*

Zoning with zone valves — alternate High-flow-rate/high-head-loss DHW circuits

1. For applications requiring DHW circuit flow rates higher than allowable for the boiler, or for high pressure-drop coil-type DHW tanks, connect the piping as in Figure 16. The DHW water only flows through the secondary circuit connector piping. NOTE: Make sure to size the connector piping (Figure 16, item 23) to handle the total flow it must handle.
2. Connect boiler to system as shown in Figure 16 when zone valve zoning. The primary/secondary piping shown ensures the boiler loop will have sufficient flow. It also avoids applying the high head of the boiler circulator to the zone valves.
3. When using a closed-type expansion tank, connect the expansion tank and make-up water piping as shown in Figure 14, page 16.
4. Connect DHW (domestic hot water) piping to indirect storage water heater as shown.

NOTICE By default, the U-Control Module turns off space heating during DHW heating (if DHW input is priority 1). The boiler circulator will turn off, preventing hot water from circulating to the system (optional timeout setting can be used to override). The flow/check valve shown on the boiler outlet piping prevents gravity circulation in the boiler loop during DHW heating.

5. Controlling the system circulator and boiler circulator
   a. You will have to set up the U-Control to operate both the boiler circulator and the DHW circulator during DHW operation. The system circulator should be off during DHW heating. Read the instructions on U-Control operation and setup, beginning on page 59.

Figure 16 Zone valve zoning plus optional DHW piping

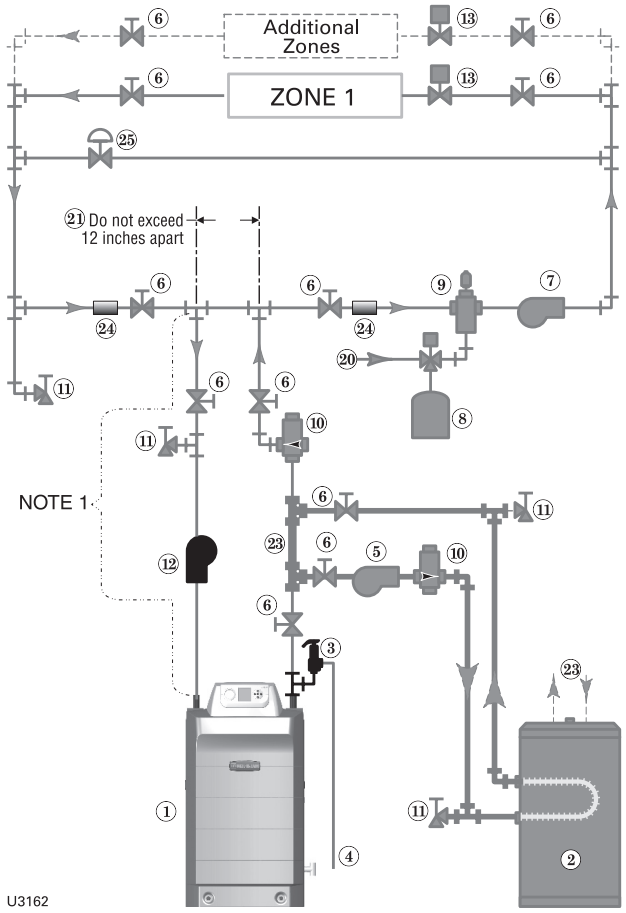

Legend — Figure 16

1	Ultra boiler
2	Indirect water heater (DHW), if used (see page 22)
3	Boiler relief valve (see page 14 for piping details)
4	Relief valve discharge piping (see page 14 for details)
5	DHW circulator (see page 22 for suggested sizing)
6	Isolation valves
7	System circulator (see information above for wiring)
8	Diaphragm (or bladder) type expansion tank (see page 22 for piping of closed-type expansion tank, if used)
9	Air separator [with automatic air vent only on systems using diaphragm (or bladder) type expansion tank]
10	Flow/check valves
11	Purge/drain valves
12	Boiler circulator
13	Zone valves, typical
20	Make-up water supply
21	Primary/secondary connection (tees no more than 12 inches apart)
23	DHW secondary connector piping — no more than 12 inches apart
24	Strap system supply and return sensors to lines as shown, at least 6 pipe diameters (but no more than 3 feet) from boiler connection tees.
25	Systems using high-head pumps may require a bypass pressure regulator to prevent damage to control valves.

■ Items supplied with boiler

■ Items supplied by others

NOTE 1: **⚠ CAUTION** Use at least the following pipe sizes on all boiler loop piping (connecting boiler to and from the primary/secondary connection, item 21). Use only primary/secondary piping as shown. Failure to follow these guidelines could result in system problems.

- Ultra-80 or Ultra-105 – 1" or larger.
- Ultra-155 or -230 – 1¼" or larger.
- Ultra-310 – 1½" or larger.

Install water piping *(continued)*

Zoning with circulators

1. Connect boiler to system as shown in Figure 17 when circulator zoning. The boiler circulator cannot be used for a zone. It must supply only the boiler loop.
2. Install a separate circulator for each zone.
3. When using a closed-type expansion tank, connect the expansion tank and make-up water piping as shown in Figure 14, page 16.
4. Connect DHW (domestic hot water) piping to indirect storage water heater as shown.

NOTICE By default, the U-Control Module turns off space heating during DHW heating (if DHW input is priority 1). The boiler circulator will turn off, preventing hot water from circulating to the system (optional timeout setting can be used to override). The flow/check valve shown on the boiler outlet piping prevents gravity circulation in the boiler loop during DHW heating.

5. Controlling the circulators
   a. The U-Control can control up to three circulators (boiler circulator and two others). Refer to Field wiring, beginning on page 54, for instructions on wiring to circulators.
   b. The factory default settings are: DHW circulator as Circulator 1, boiler circulator as Circulator 2. See Field wiring instructions, beginning on page 54, for details.
   c. The zone circulators in Figure 17 must be controlled by circulator relays activated by the zone thermostats or zone controller.

Figure 17 Circulator zoning plus optional DHW piping

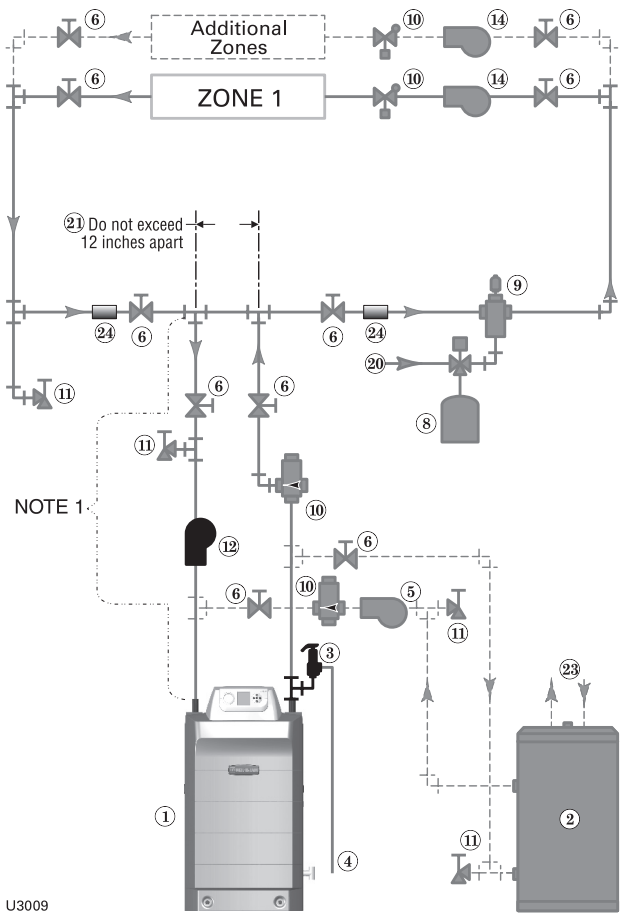

Legend — Figure 17

1	Ultra boiler
2	Indirect water heater (DHW), if used (see page 22)
3	Boiler relief valve (see page 14 for piping details)
4	Relief valve discharge piping (see page 14 for details)
5	DHW circulator (see page 22 for suggested sizing)
6	Isolation valves
7	System circulator (see information above for wiring)
8	Diaphragm (or bladder) type expansion tank (see page 22 for piping of closed-type expansion tank, if used)
9	Air separator [with automatic air vent only on systems using diaphragm (or bladder) type expansion tank]
10	Flow/check valves
11	Purge/drain valves
12	Boiler circulator
14	Zone circulators, typical
20	Make-up water supply
21	Primary/secondary connection (tees no more than 12 inches apart)
24	Strap system supply and return sensors to lines as shown, at least 6 pipe diameters (but no more than 3 feet) from boiler connection tees.

■ Items supplied with boiler

▒ Items supplied by others

NOTE 1: **⚠ CAUTION** Use at least the following pipe sizes on all boiler loop piping (connecting boiler to and from the primary/secondary connection, item 21). Use only primary/secondary piping as shown. Failure to follow these guidelines could result in system problems.

- Ultra-80 or Ultra-105 – 1" or larger.
- Ultra-155 or -230 – 1¼" or larger.
- Ultra-310 – 1½" or larger.

Install water piping *(continued)*

Radiant heating applications

1. The Ultra boiler is ideal for use in radiant heating. The Ultra boiler's unique heat exchanger design allows it to work well even in condensing mode. So there is no need to regulate boiler return water temperature in radiant heating applications.
2. Connect boiler to system as shown in Figure 18 for typical radiant heating applications. The primary/secondary piping shown ensures the boiler loop will have sufficient flow. Size the system piping and circulator to provide the flow and pressure drop needed for the radiant system.
3. Adding the recommended high limit control (Figure 18, item 22) can help ensure supply water temperature will not exceed the maximum allowable for the radiant system. Wire this limit control in either the manual reset or automatic reset external limit circuit of the U-Control.
4. When using a closed-type expansion tank, connect the expansion tank and make-up water piping as shown in Figure 14, page 16.
5. Connect DHW (domestic hot water) piping to indirect storage water heater as shown.

NOTICE By default, the U-Control Module turns off space heating during DHW heating (if DHW input is priority 1). The boiler circulator will turn off, preventing hot water from circulating to the system (optional timeout setting can be used to override). The flow/check valve shown on the boiler outlet piping prevents gravity circulation in the boiler loop during DHW heating.

6. Controlling the circulators
   a. The U-Control can control up to three circulators (boiler circulator and two others). Refer to Field wiring, beginning on page 54, for instructions on wiring to circulators.
   b. The factory default settings are: DHW circulator as Circulator 1, boiler circulator as Circulator 2. See Field wiring instructions, beginning on page 54, for details.

Figure 18 Typical radiant heating system piping plus optional DHW

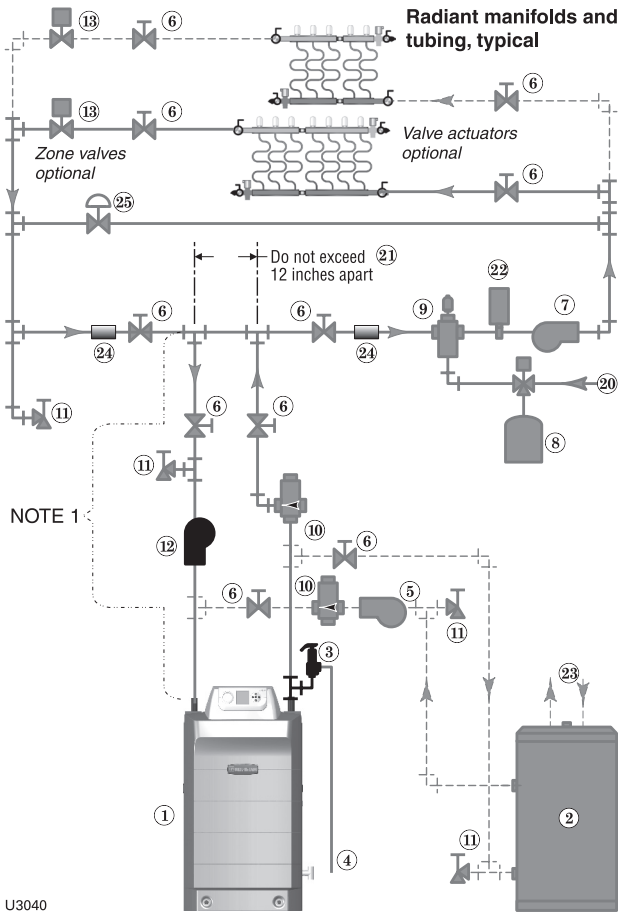

Legend — Figure 18

1	Ultra boiler
2	Indirect water heater (DHW), if used (see page 22)
3	Boiler relief valve (see page 14 for piping details)
4	Relief valve discharge piping (see page 14 for details)
5	DHW circulator (see page 22 for suggested sizing)
6	Isolation valves
7	System circulator (see information above for wiring)
8	Diaphragm (or bladder) type expansion tank (see page 22 for piping of closed-type expansion tank, if used)
9	Air separator [with automatic air vent only on systems using diaphragm (or bladder) type expansion tank]
10	Flow/check valves
11	Purge/drain valves
12	Boiler circulator
13	Zone valves, when used (zoning may also be done using manifold-mounted valve actuators)
20	Make-up water supply
21	Primary/secondary connection (tees no more than 12 inches apart)
22	Optional high limit temperature control, set to protect radiant tubing
24	Strap system supply and return sensors to lines as shown, at least 6 pipe diameters (but no more than 3 feet) from boiler connection tees.
25	Systems using high-head pumps may require a bypass pressure regulator to prevent damage to control valves.

■ Items supplied with boiler

■ Items supplied by others

NOTE 1: **⚠ CAUTION** Use at least the following pipe sizes on all boiler loop piping (connecting boiler to and from the primary/secondary connection, item 21). Use only primary/secondary piping as shown. Failure to follow these guidelines could result in system problems.

- Ultra-80 or Ultra-105 – 1" or larger.
- Ultra-155 or -230 – 1¼" or larger.
- Ultra-310 – 1½" or larger.

Install water piping *(continued)*

Chilled water systems

1. Install boiler so that chilled medium is piped in parallel with the heating boiler. Use appropriate valves to prevent chilled medium from entering boiler. See Figure 19 for typical installation of balancing valve and check valve.
2. The space heating system may be zoned with circulators if a separate circulator is supplied for the chilled water loop.

NOTICE If antifreeze is used in the system, consider the effects of antifreeze on circulator sizing and DHW performance. Some local codes may require double-wall DHW heat exchanger design.

⚠WARNING Chilled medium, if used, is piped in parallel with heating boiler as shown in Figure 19. Use appropriate valves to prevent chilled medium from entering boiler.

If boiler is connected to heating coils located in air handling units where they can be exposed to refrigerated air, use flow control valves or other automatic means to prevent gravity circulation during cooling cycle.

NOTICE By default, the U-Control Module turns off space heating during DHW heating (if DHW input is priority 1). The boiler circulator will turn off, preventing hot water from circulating to the system (optional timeout setting can be used to override). The flow/check valve shown on the boiler outlet piping prevents gravity circulation in the boiler loop during DHW heating.

3. Controlling the circulators
   a. The U-Control can control up to three circulators (boiler circulator and two others). Refer to Field wiring, beginning on page 54, for instructions on wiring to circulators.
   b. The factory default settings are: DHW circulator as Circulator 1, boiler circulator as Circulator 2. See Field wiring instructions, beginning on page 54, for details.

Figure 19 Chilled water system plus optional DHW piping

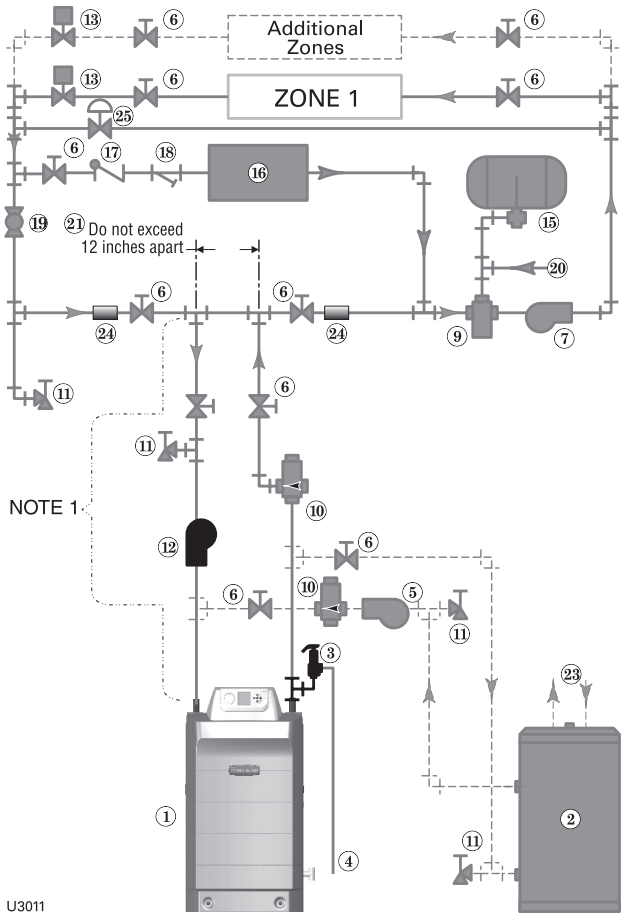

Legend — Figure 19

1 Ultra boiler
2 Indirect water heater (DHW), if used (see page 22)
3 Boiler relief valve (see page 14 for piping details)
4 Relief valve discharge piping (see page 14 for details)
5 DHW circulator (see page 22 for suggested sizing)
6 Isolation valves
7 System circulator (see information above for wiring)
8 Diaphragm (or bladder) type expansion tank (see page 22 for piping of closed-type expansion tank, if used)
9 Air separator [with automatic air vent only on systems using diaphragm (or bladder) type expansion tank]
10 Flow/check valves
11 Purge/drain valves
12 Boiler circulator
13 Zone valves, typical
15 Closed-type expansion tank
16 Water chiller
17 Check valve
18 Strainer
19 Balancing valve
20 Make-up water supply
21 Primary/secondary connection (tees no more than 12 inches apart)
24 Strap system supply and return sensors to lines as shown, at least 6 pipe diameters (but no more than 3 feet) from boiler connection tees.
25 Systems using high-head pumps may require a bypass pressure regulator to prevent damage to control valves.

■ Items supplied with boiler
■ Items supplied by others

NOTE 1: **⚠CAUTION** Use at least the following pipe sizes on all boiler loop piping (connecting boiler to and from the primary/secondary connection, item 21). Use only primary/secondary piping as shown. Failure to follow these guidelines could result in system problems.

- Ultra-80 or Ultra-105 – 1" or larger.
- Ultra-155 or -230 – 1¼" or larger.
- Ultra-310 – 1½" or larger.

Install water piping *(continued)*

Sizing DHW system piping

NOTICE For **Weil-McLain PLUS water heaters** — Refer to the installation manual for PLUS, GOLD PLUS, Ultra PLUS and other Weil-McLain heaters for application information. The information here is for other water heater designs.

NOTICE When using the Ultra boiler for dedicated DHW applications, use the circulator supplied with the boiler (007 for Ultra-80/105; 0014 for Ultra-155/230/310) to circulate to the water heater, except where higher flow rates may be required for the heater used. Use the following method to select a circulator for the water heater on combined space heating/DHW systems.

1. To pipe the DHW tank and boiler, follow the suggested piping diagrams beginning on page 17.
2. Figure 23, page 23 shows the pump curves for typical DHW circulators. Use these curves along with boiler pressure drop data from Figure 22, page 23 to size the DHW piping and circulator.
3. Procedure to select a DHW circulator:

Step 1:

From the water heater manufacturer's data, find:

- Required boiler water flow rate, GPM, at 190°F.
- Pressure drop across the water heater at this flow rate, in feet water column.

Step 2:

Find your boiler model in Figure 22, page 23.

Select a flow rate in the Flow rate column just larger than the required boiler water flow rate from Step 1.

Step 3:

Read across the row selected to find the boiler pressure drop, H1, and the pressure drop in the piping, H2. Make sure to use the copper pipe size given in column 3 when piping the water heater.

Step 4:

Add the pressure drop across the water heater, from Step 1, to the values of H1 and H2 for total head loss.

$$H_{total} = H1 + H2 + H3$$

Step 5:

Select a circulator that can deliver the required flow rate, gpm, against the total head loss found in Step 4.

Example:

Consider an Ultra-155 used with a water heater that requires a flow of 12 gpm with boiler water at 190°F. The water heater is to be piped as in Figure 20.

From the example water heater manufacturer's data, the head loss across the water heater at 12 gpm is 5.5 feet water column.

Read down the first column of Figure 22, page 23 for the Ultra-155 until you find a flow rate just larger than the required 12 gpm. You'll find a value of 13 gpm in the fourth row.

At 13 gpm, with an Ultra-155, the recommended pipe size is 1¼ inch. From the table, the head losses are:

H1 = 13.3 feet H2 = 3.9 feet

H3 = 5.5 feet (from water heater manufacturer's data)

H_{total} = 13.3 + 3.9 + 5.5 = 22.7 feet.

The closest circulator selection (from Figure 23, page 23) that can deliver 12 gpm at 22.7 feet head is either a Taco 0013 or a B&G PL-36.

Note that, if the water heater were piped as in Figure 21, then H1 would be 0, so total head loss would be 14.7 feet (9.2 + 5.5). A Taco 0014 would handle the load if piped this way.

NOTICE See Figure 15 through Figure 19 for piping details not shown below. For DHW piping as shown in Figure 16, use sizing information in .

Figure 20 DHW piping direct-connected across the boiler (used for Figure 15 through Figure 19, but not for Figure 16)

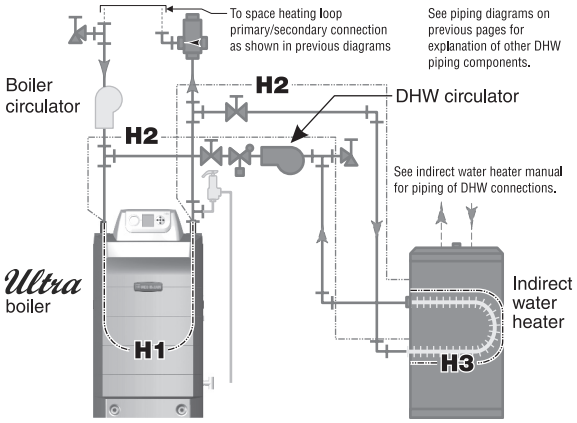

Figure 21 DHW piping as a secondary circuit (used for systems with DHW piping as shown in Figure 16)

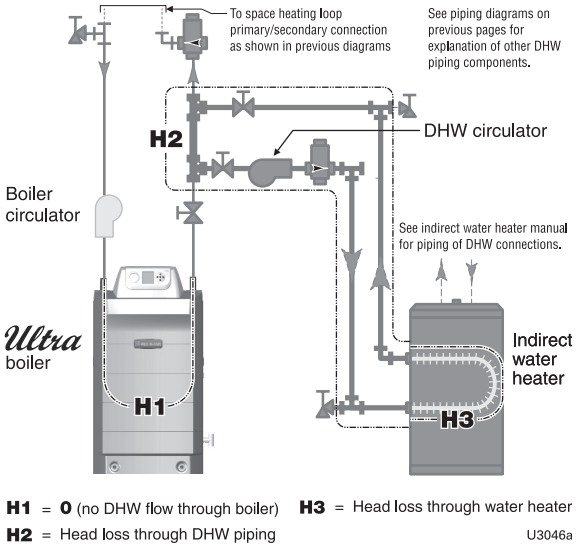

Install water piping *(continued)*

Figure 22 Pipe sizing and head losses for DHW applications *(H1=Ultra boiler head loss; H2=piping head loss)*

Flow rate	Temp rise	Pipe size	H1	H2
GPM	°F	Inches	Boiler head loss Feet w.c.	Piping head loss Feet w.c.
Ultra-80 (71,000 Btuh output)				
3.5 (min)	41	1	1.4	0.8
7	20	1	6.6	2.7
9	16	1	11.6	4.2
10	14	1¼	14.6	2.5
Ultra-105 (94,000 Btuh output)				
4.5 (min)	42	1	3.1	1.2
7	27	1	7.0	2.7
9	21	1	11.2	4.2
10	19	1¼	13.6	2.5
13	14	1¼	22.2	3.9
Ultra-155 (139,000 Btuh output)				
7.0 (min)	40	1¼	3.6	1.3
9	31	1¼	6.2	2.1
10.0	28	1¼	7.7	2.5
13	21	1¼	13.3	3.9
16	17	1¼	20.5	5.7
Ultra-230 (207,000 Btuh output)				
10 (min)	41	1¼	5.9	2.5
13	32	1¼	9.4	3.9
16	26	1¼	13.7	5.7
21	20	1½	22.0	4.2
Ultra-310 (289,000 Btuh output)				
14.5 (min)	40	1½	4.6	2.1
18	32	1½	6.5	2.9
21.5	27	1½	9.2	4.4
29	20	1½	15.5	7.4

Figure 23 Pump curves for typical circulators suggested for DHW loop

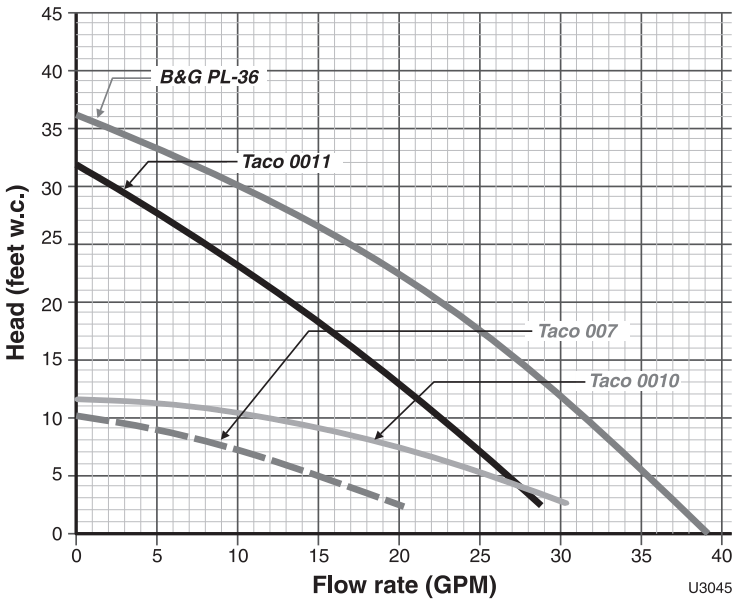

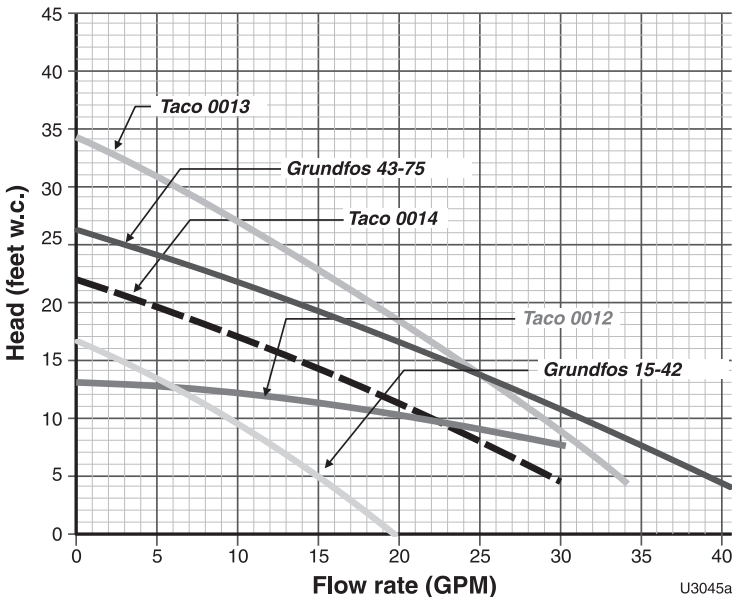

Multiple boiler water piping

Easy-Fit® piping installation

1. Main header and Easy-Fit® Manifold pipe sizing.
   a. New system — See page 15.
   b. Replacing boilers in an existing system — Without reducing size, connect system supply and return lines. Install tees or crosses for Easy-Fit® manifolds as shown in Figure 24 or Figure 25. Size manifolds to handle total connected boiler output as shown.
2. Provide connections in main header for Easy-Fit® manifolds as close as possible to the midpoint of multiple boilers.
   a. Use tees for four or less boilers, as in Figure 24.
   b. Use either tees (Figure 24) or crosses (Figure 25) for five or more boilers.
3. Manifold placement:
   a. To alternate spacing for supply and return lines to boilers, reverse the short-end and long-end of the manifolds as shown in Figure 24 and Figure 25.
   b. Return manifold must be on the return side of the main and supply manifold must be on the supply side of the main. Drawings in this manual show flow in system main from right to left. For system flowing left to right, reverse the locations of the manifolds accordingly.
4. Connect from Easy-Fit® manifold branches to boiler supply and return connections using copper or steel pipe, sized for the required flow rate. See page 15 for information.
5. Provide a flow/check valve in the supply piping of each boiler as shown in piping diagrams in this manual. Install an isolation valve on the supply and return of each boiler as shown. Some local codes may require the use of individual water level controls and limits on each boiler when isolation valves are installed.
6. Install main system air eliminator and primary circulator in supply piping as shown in piping diagrams. Place expansion tank on suction side of system circulator as shown.
7. Install system accessories as shown in drawings.
8. Piping recommendation drawings:
   a. Figure 24 and Figure 25 show details of Easy-Fit® manifolds.
   b. Figure 26, page 25 is a schematic piping drawing showing the locations of typical boiler piping and system piping, including limits and other devices often required by local codes.
   c. Figure 27, page 26 and Figure 28, page 27 are three-dimensional piping drawings of typical multiple boiler installation.
   d. Figure 29, page 28 shows recommended piping when an isolating heat exchanger is needed.
9. If desired, other primary/secondary piping arrangements can be used.

NOTICE When using isolation valves on each boiler, some codes may require providing a low water control and additional limit for each boiler. Consult local codes to determine if omission of the individual boiler isolation valves may allow the use of a single water level control and additional limit for the entire multiple boiler system. **The U-Control module proves water level using a dual temperature sensor installed in the Ultra heat exchanger.** This will satisfy some code requirements for low water cutoff protection.

Maximum connected load per manifold:
2-inch manifold — 450 MBH
3-inch manifold — 1400 MBH
4-inch manifold — 2900 MBH

Figure 24 Single-sided EZ-Fit Header connection

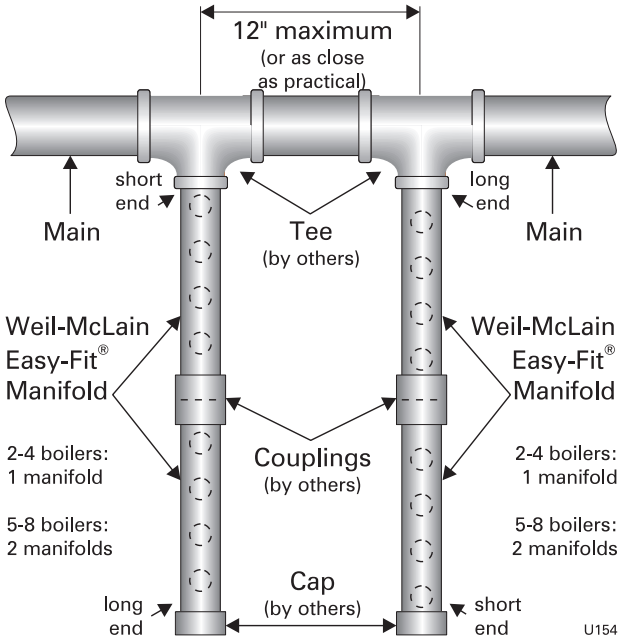

Figure 25 Double-sided EZ-Fit Header connection

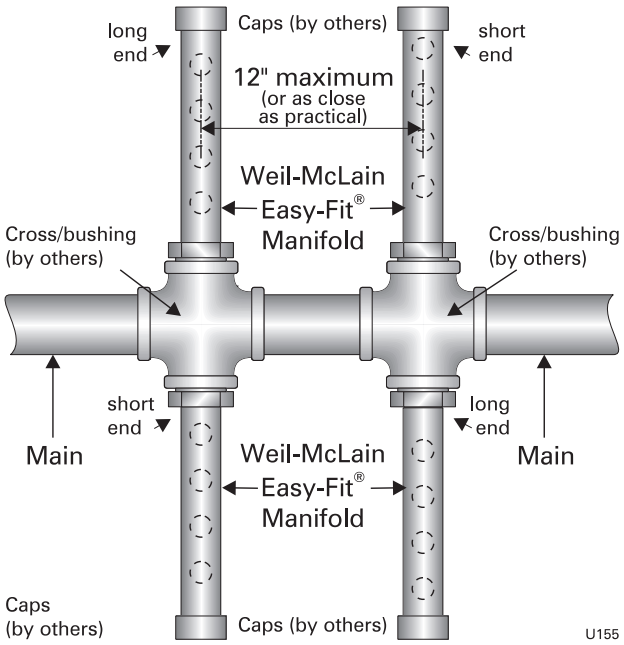

Multiple boiler water piping *(continued)*

Figure 26 Piping schematic — typical piping for multiple Ultra boilers, using Weil-McLain Easy-Fit manifolds

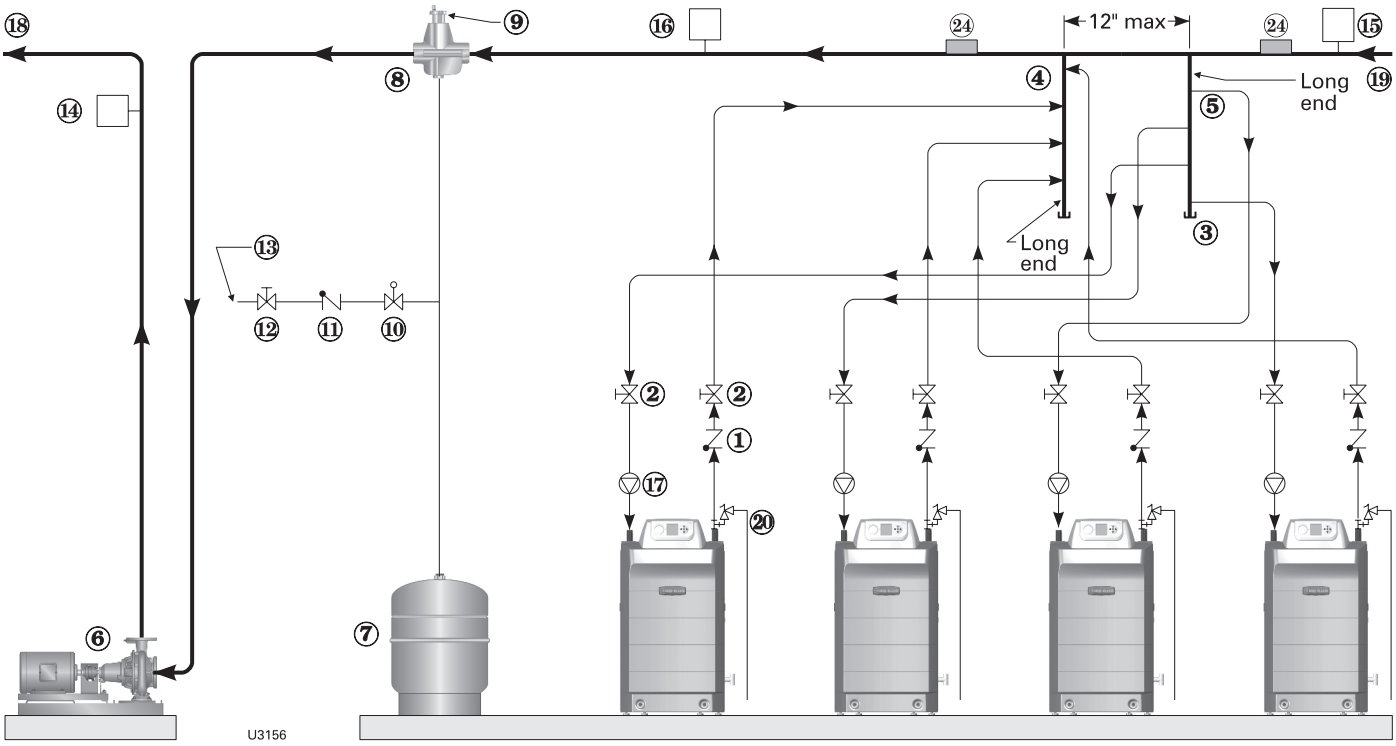

Legend — Figure 26

1 Flow/check valve (each boiler)

2 Isolation valves (when used)

3 Cap

4 Easy-Fit® Manifold (supply) — layout and size per page 24

5 Easy-Fit® Manifold (return) — layout and size per page 24

6 Primary circulator

7 Expansion tank (diaphragm type)

8 System air eliminator

9 System automatic air vent

10 Pressure reducing valve

11 Check valve or backflow preventer, as required by applicable codes

12 Isolation valve

13 Cold water supply

14 Supply water temperature control (when used)

15 Low water cutoff (when used) (place above primary header)

16 Water flow switch (when used)

17 Boiler circulator (each boiler)

18 System supply

19 System return

20 Boiler relief valve and discharge piping, installed per Ultra Boiler Manual

24 Strap system supply and return sensors to lines as shown, at least 6 pipe diameters (but no more than 3 feet) from boiler connection tees. For pipe sizes larger than 3-inch, contact Weil-McLain for well-mounted sensors.

Multiple boiler water piping *(continued)*

Figure 27 Piping layout — typical piping for multiple Ultra boilers, using Weil-McLain Easy-Fit manifolds

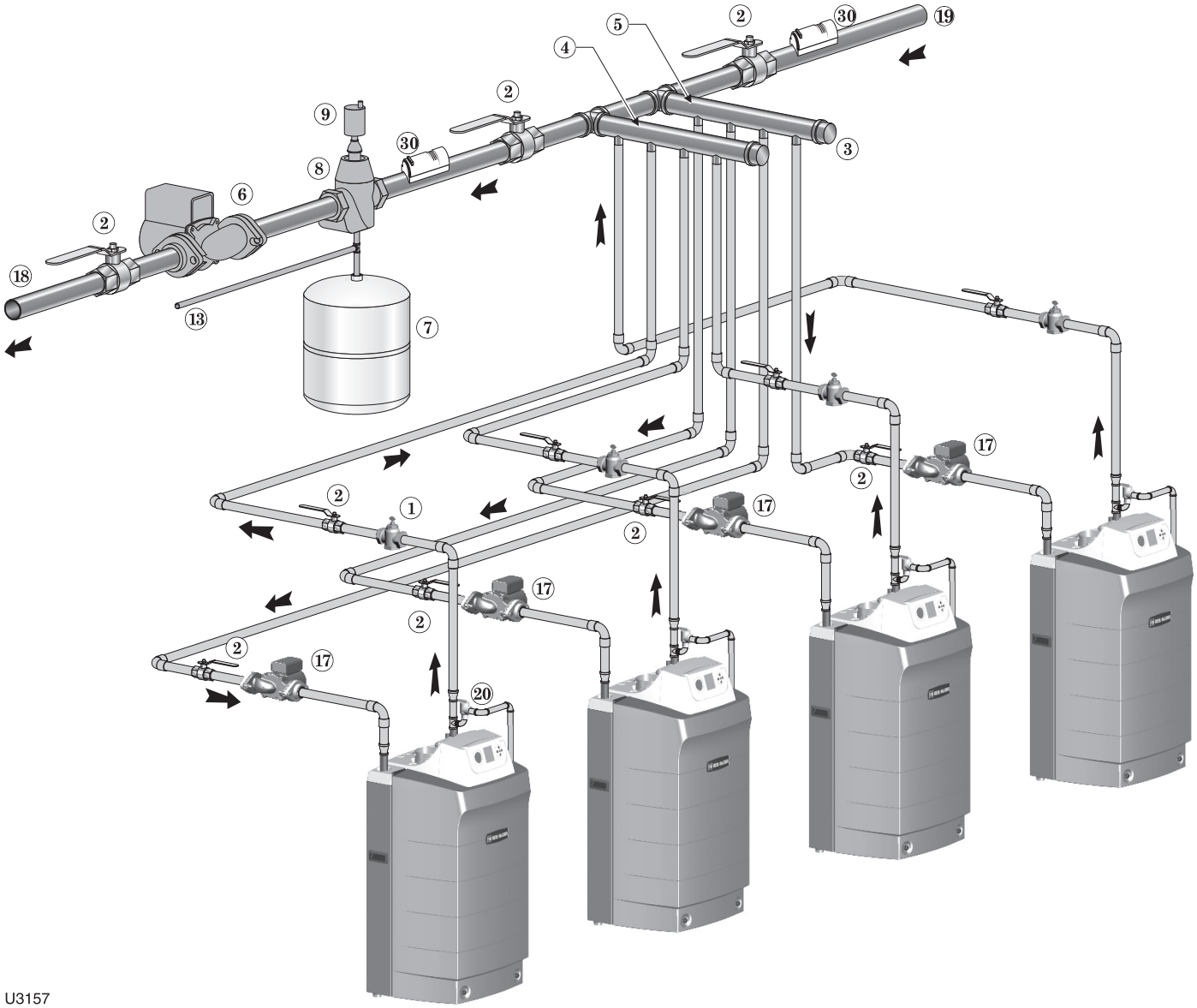

Legend — Figure 27	
1 Flow/check valve (each boiler)	9 System automatic air vent
2 Isolation valves (when used)	13 Cold water supply
3 Caps	17 Boiler circulator (each boiler)
4 Easy-Fit® Manifold (supply) — layout and size per page 24	18 System supply
5 Easy-Fit® Manifold (return) — layout and size per page 24	19 System return
6 Primary circulator	20 Boiler relief valve and discharge piping, installed per Ultra Boiler Manual
7 Expansion tank (diaphragm type)	30 Strap system supply and return sensors to lines as shown, at least 6 pipe diameters (but no more than 3 feet) from boiler connection tees. For pipe sizes larger than 3-inch, contact Weil-McLain for well-mounted sensors.
8 System air eliminator	

Multiple boiler water piping *(continued)*

Figure 28 Piping layout — typical piping for multiple Ultra boilers, with DHW storage heaters

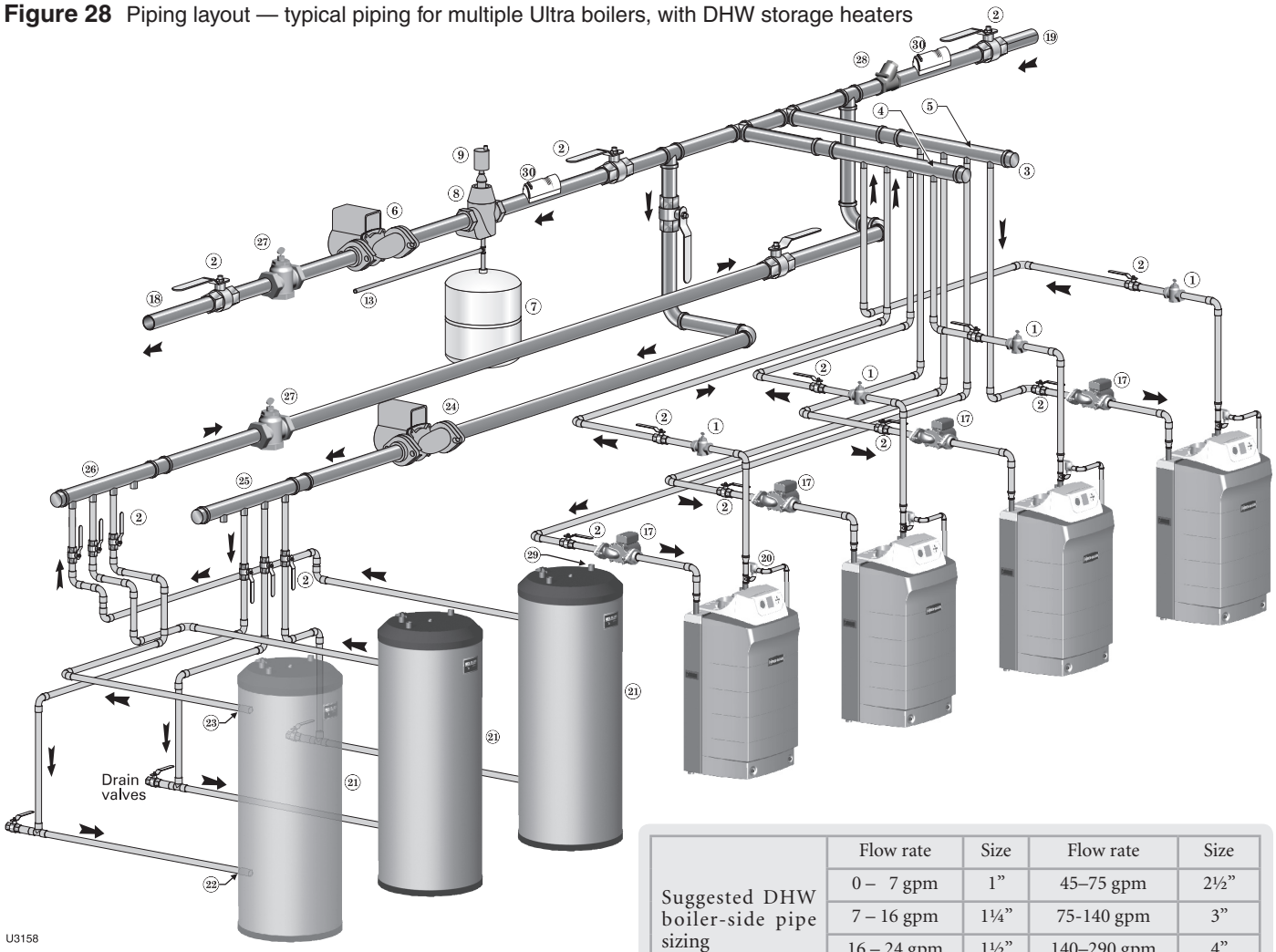

Suggested DHW boiler-side pipe sizing	Flow rate	Size	Flow rate	Size
	0 – 7 gpm	1”	45–75 gpm	2½”
	7 – 16 gpm	1¼”	75-140 gpm	3”
	16 – 24 gpm	1½”	140–290 gpm	4”
	24 – 45 gpm	2”		

Legend — Figure 28

1 Flow/check valve (each boiler)
2 Isolation valves (when used)
3 Caps
4 Easy-Fit® Manifold (supply) — layout and size per page 24
5 Easy-Fit® Manifold (return) — layout and size per page 24
6 Primary circulator
7 Expansion tank (diaphragm type)
8 System air eliminator
9 System automatic air vent
13 Cold water supply
17 Boiler circulator (each boiler)
18 System supply
19 System return
20 Boiler relief valve and discharge piping, installed per Ultra Boiler Manual
21 Indirect-fired storage water heaters (Weil-McLain PLUS Line shown) — Example is shown with reverse-return boiler-side piping using a single circulator. Alternate: each water heater could have its own circulator.
22 Boiler water inlet
23 Boiler water outlet
24 DHW boiler-side circulator
25 DHW boiler-side supply Easy-Fit® Manifold
26 DHW boiler-side return Easy-Fit® Manifold
27 Flow/check valves (to prevent induced or gravity flow in heating system or DHW piping)
28 Check valve to prevent heat migration in heating system
29 See water heater manual for DHW piping — The DHW piping must also be manifolded together since the boiler-side piping is manifolded. If DHW heaters supply separate DHW circuits, provide an individual circulator for each water heater, and control each circulator by its water heater’s aquastat.
30 Strap system supply and return sensors to lines as shown, at least 6 pipe diameters (but no more than 3 feet) from boiler connection tees. For pipe sizes larger than 3-inch, contact Weil-McLain for well-mounted sensors.

NOTICE This piping is suggested only. The layout above should be controlled with a boiler sequencing panel that provides DHW operation as well. Wire the heating system circulator to operate only on call for heat. Alternatively, use the boiler sequencing panel to provide domestic priority by disabling the heating system circulator any time there is a DHW call for heat. The boiler circulators, item 17, must operate on any call for heat, whether heating system or DHW. Offset the DHW boiler-side supply and return manifolds as shown so the total run of pipe and fittings to each of the water heaters is approximately equal.

Multiple boiler water piping *(continued)*

Figure 29 Piping layout — typical piping for multiple Ultra boilers, using isolation exchanger

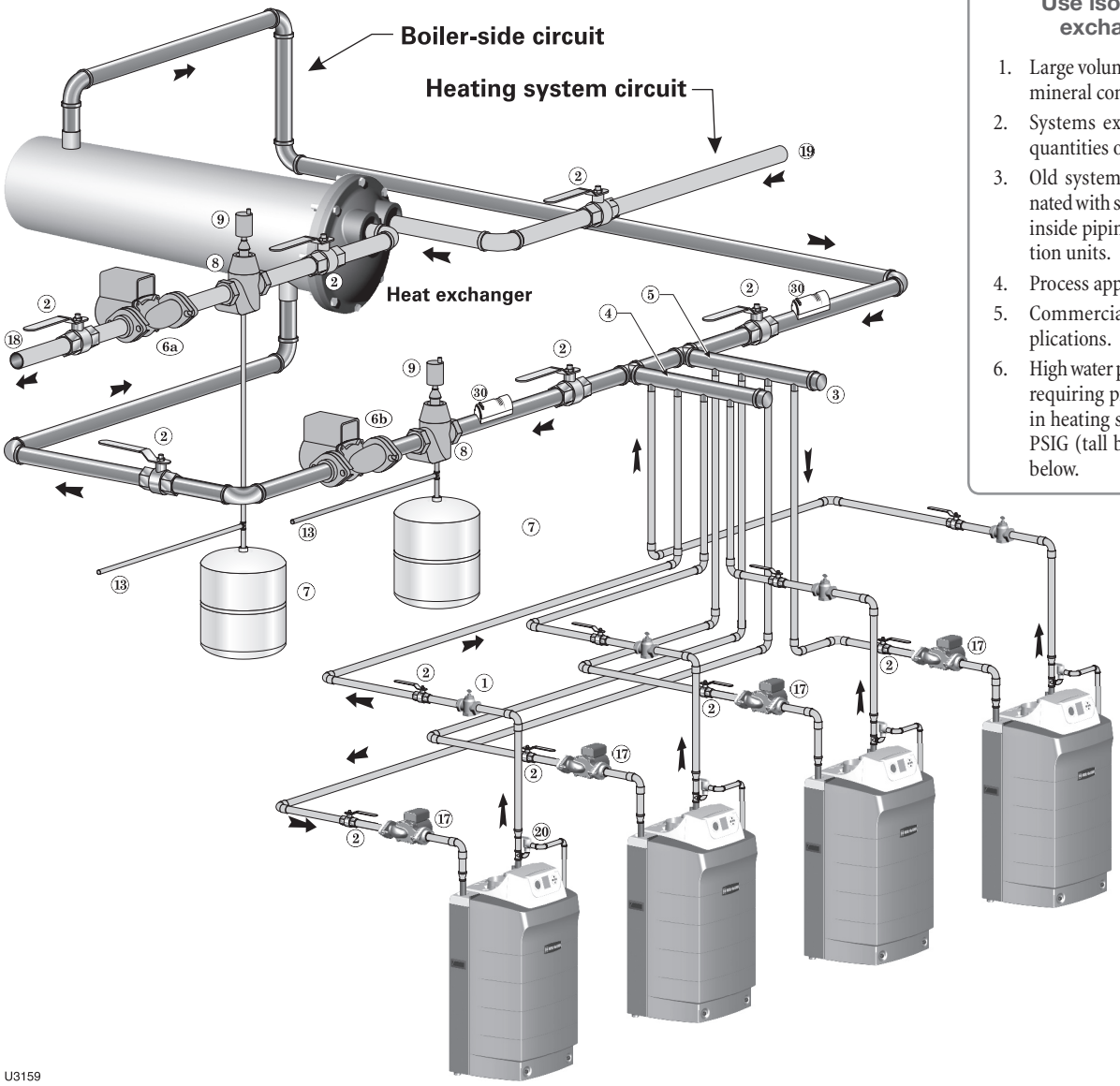

Use isolation heat exchanger for:

1. Large volume systems with high mineral content in water.
2. Systems exposed to untreated quantities of makeup water.
3. Old systems severely contaminated with scale and rust buildup inside piping and heat distribution units.
4. Process applications.
5. Commercial service water applications.
6. High water pressure applications, requiring pressure relief setting in heating system more than 30 PSIG (tall buildings). See notes below.

Legend — Figure 29

1 Flow/check valve (each boiler)	9 System automatic air vent	Notes:
2 Isolation valves (when used)	13 Cold water supply connections	1. Contact heat exchanger manufacturer for heat exchanger shell-side and tube-side piping and circulator requirements. Tube-side flow and temperatures must meet heating system requirements.
3 Cap	17 Boiler circulator (each boiler)	2. Contact heat exchanger manufacturer for sizing heat exchanger.
4 Easy-Fit® Manifold (supply) — layout and size per page 24	18 Heating system supply	3. Heat exchanger shell-side circuit requires its own expansion tank as shown.
5 Easy-Fit® Manifold (return) — layout and size per page 24	19 Heating system return	4. Heating system circuit requires its own expansion tank, as shown, plus its own relief valve set to protect heating system and heat exchanger piping and components.
6a Heating system circulator (exchanger tube-side)	20 Boiler relief valve and discharge piping, installed per Ultra Boiler Manual	5. When individual isolation valves are used, individual boiler and level controls may be required.
6b Heat exchanger shell-side circulator	30 Strap system supply and return sensors to lines as shown, at least 6 pipe diameters (but no more than 3 feet) from boiler connection tees. For pipe sizes larger than 3-inch, contact Weil-McLain for well-mounted sensors.	
7 Expansion tanks (diaphragm type)		
8 System air eliminator		

Appliances remaining on an existing vent system

⚠ DANGER Do not install the Ultra boiler into a common vent with any other appliance. This will cause flue gas spillage or appliance malfunction, resulting in possible severe personal injury, death or substantial property damage.

⚠ WARNING Existing common vent systems may be too large for the appliances remaining connected after the existing boiler is removed.

⚠ WARNING Failure to follow all instructions can result in flue gas spillage and carbon monoxide emissions, causing severe personal injury or death.

When removing a boiler from an existing common vent system

The Ultra boiler cannot be common vented with any other appliance. When an existing boiler is replaced with an Ultra boiler, the Ultra boiler CANNOT use the existing common vent. The Ultra boiler requires its own vent and air piping, as specified in this manual. This may cause a problem for the appliances that remain on the old common vent, because the vent may be too large. The following test is intended to check for proper operation of the appliances remaining on the old common vent system.

Vent system verification

At the time of removal of an existing boiler, the following steps shall be followed with each appliance remaining connected to the common venting system placed in operation, while the other appliances remaining connected to the common venting system are not in operation. Seal any unused openings in the common venting system.

Existing vent test procedure

(The following is intended to test whether the appliances remaining on an existing vent system will operate satisfactorily.)

1. Visually inspect the venting system for proper size and horizontal pitch and determine there is no blockage or restriction, leakage, corrosion or other deficiencies which could cause an unsafe condition.
2. Test vent system — Insofar as is practical, close all building doors and windows and all doors between the space in which the appliances remaining connected to the common venting system are located and other spaces of the building. Turn on clothes dryers and any appliance not connected to the common venting system. Turn on any exhaust fans, such as range hoods and bathroom exhausts, so they will operate at maximum speed. Do not operate a summer exhaust fan. Close fireplace dampers.
3. Place in operation the appliance being inspected. Follow the lighting instructions. Adjust thermostat so appliance will operate continuously.
4. Test for spillage at draft hood relief opening after 5 minutes of main burner operation. Use the flame of a match or candle, or smoke from a cigarette, cigar, or pipe.
5. After it has been determined that each appliance remaining connected to the common venting system properly vents when tested as outlined herein, return doors, windows, exhaust fans, fireplace dampers, and any other gas-burning appliance to their previous conditions of use.

Any improper operation of common venting system should be corrected so the installation conforms with the National Fuel Gas Code, ANSI Z223.1 — latest edition. Correct by re-sizing to approach the minimum size as determined using the appropriate tables in Part 11 of that code. Canadian installations must comply with B149.1 or B149.2 Installation Code.

Air piping — general

WARNING **You must pipe combustion air to the boiler air intake.**

The air termination fitting must be installed with the clearances and geometry relative to the vent outlet depicted in this manual to ensure that flue products do not enter the air intake.

Ensure that the combustion air will not contain any of the contaminants in Figure 30.

Do not pipe combustion air near a swimming pool, for example.

Avoid areas subject to exhaust fumes from laundry facilities. These areas will always contain contaminants.

Contaminated combustion air will damage the boiler, resulting in possible severe personal injury, death or substantial property damage.

Manifolded combustion air option

1. Multiple Ultra boilers can use a common combustion air manifold.
   a. See Figure 114, page 106 for minimum cross sectional area of combined air ducts.
   b. Provide minimum clearance to adjacent vents and grade/snow line as shown in Figure 31.
   c. Provide minimum free area in duct (adjusted for louver restriction) of **1 square inch per 2,000 Btuh** total boiler input.
   d. If combustion air damper is used, wire to boilers to prevent operation except after damper has opened.

WARNING ONLY air piping can be combined. DO NOT use combined vent piping. Flue gas leakage and boiler component damage can occur. Failure to comply could result in severe personal injury, death or substantial property damage.

Figure 31 Manifolded combustion air option (DO NOT use common venting — the manifold option is only for combustion air — all vent pipes must be routed and terminated individually as described in this manual.) — (See Figure 114, page 106 for minimum cross sectional area of combined air ducts.)

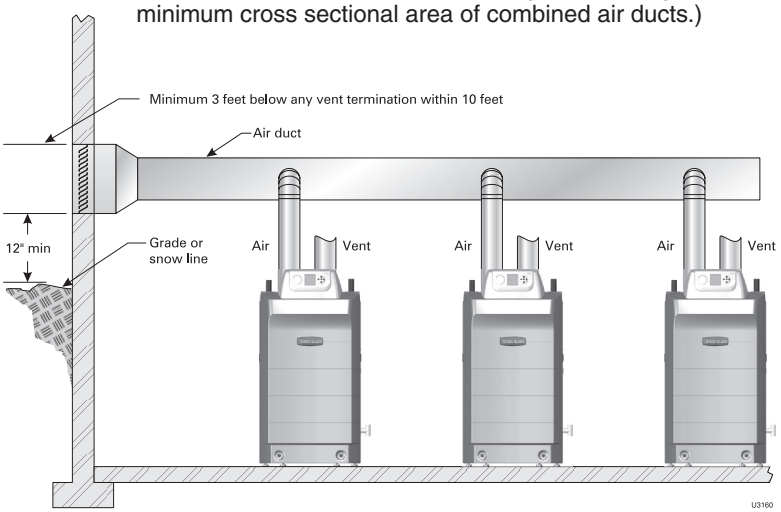

Prevent combustion air contamination

1. Install air inlet piping for the Ultra boiler as described in this manual.
2. Do not terminate air piping in locations that can allow contamination of combustion air.
3. Refer to Figure 30 for products and areas which may cause contaminated combustion air.

Figure 30 Corrosive contaminants and sources

Products to avoid
Spray cans containing chloro/fluorocarbons
Permanent wave solutions
Chlorinated waxes/cleaners
Chlorine-based swimming pool chemicals
Calcium chloride used for thawing
Sodium chloride used for water softening
Refrigerant leaks
Paint or varnish removers
Hydrochloric acid/muriatic acid
Cements and glues
Antistatic fabric softeners used in clothes dryers
Chlorine-type bleaches, detergents, and cleaning solvents found in household laundry rooms
Adhesives used to fasten building products and other similar products
Excessive dust and dirt

Areas likely to have contaminants
Dry cleaning/laundry areas and establishments
Swimming pools
Metal fabrication plants
Beauty shops
Refrigeration repair shops
Photo processing plants
Auto body shops
Plastic manufacturing plants
Furniture refinishing areas and establishments
New building construction
Remodeling areas
Garages with workshops

Venting/air piping — general

⚠ DANGER **Ultra Boilers must be vented and supplied with combustion and ventilation air using piping and methods described in this manual**.

Every boiler must have its own vent. **DO NOT** common vent with any other appliance. See page 29.

Inspect finished vent and air piping thoroughly to ensure all are airtight and comply with the instructions provided and with all requirements of applicable codes.

Failure to provide a properly-installed vent and air system will cause severe personal injury or death.

⚠ WARNING Installations must comply with local requirements and with the National Fuel Gas Code, ANSI Z223.1 for U.S. installations or CSA B149.1 or B149.2 for Canadian installations.

⚠ WARNING Use only the materials listed in this manual for vent and air pipe and fittings. Failure to comply could result in severe personal injury, death or substantial property damage.

⚠ WARNING **If used, a masonry chimney can ONLY be used as a PIPE CHASE for vent and air pipes** — The vent and air piping must be installed as instructed in this manual and all joints must be sealed. The chimney must be used only for Ultra boilers. NO OTHER appliance or fireplace can be connected to the chimney.

The chimney must be straight, with no offsets, and the vent and air piping materials must comply with this instruction manual.

The chimney must be fitted with a sealed access opening, through which the interior of the chimney can be inspected.

The chimney and liner must be inspected at least once annually to verify condition.

Failure to comply could result in severe personal injury, death or substantial property damage.

Combustion air piping

1. Combustion air must be piped from outside to the boiler, following the instructions in this manual, and compliant with all applicable codes. Read the warning in Figure 30, page 30, and ensure the air intake will not be likely to draw in contaminated air.
2. Combustion air can be piped individually for each boiler, or it can be manifolded as shown in Figure 31, page 30. Air piping must always terminate on the same side (or roof) of the building as the vent.

Vent piping

1. Boiler flue gases must be piped from the boiler to outside, following the instructions in this manual, and compliant with all applicable codes. The vent pipe must terminate either through the sidewall or through the roof, located with the correct separation from the air termination. See Figure 34, page 32, and the associated instructions referenced.
2. Each Ultra boiler requires a separate vent. Do not common vent.

Vent and air piping materials

1. See Figure 32 for approved vent and air piping materials.

Figure 32 Use only the materials listed below, ensuring that all materials meet local codes

<table>
<tr><th rowspan="2">Item</th><th rowspan="2">Material</th><th colspan="2">Standards for installations in:</th></tr>
<tr><th>United States</th><th>Canada</th></tr>
<tr><td colspan="4">Plastic piping materials</td></tr>
<tr><td rowspan="4">Vent or air pipe & fittings</td><td>PVC schedule 40</td><td>ANSI/ASTM D1785</td><td rowspan="7">Plastic vent pipe must be certified to UL S636 when required.

Air pipe can be any of those listed at left if acceptable for local codes.</td></tr>
<tr><td>PVC-DWV</td><td>ANSI/ASTM D2665</td></tr>
<tr><td>CPVC schedule 40</td><td>ANSI/ASTM F441</td></tr>
<tr><td>ABS-DWV schedule 40</td><td>ANSI/ASTM D2661</td></tr>
<tr><td rowspan="3">PVC & ABS pipe cement & primer</td><td>PVC</td><td>ANSI/ASTM D2564</td></tr>
<tr><td>CPVC</td><td>ANSI/ASTM F493</td></tr>
<tr><td>ABS</td><td>ANSI/ASTM D2235</td></tr>
<tr><td colspan="4">AL29-4C piping materials</td></tr>
<tr><td>Vent pipe AL29-4C stainless steel</td><td>Heat Fab, Inc.
Saf-T-Vent®

Z-Flex, Inc.
Z-Vent II

Protech Systems
FasNSeal™</td><td>Certified for Category IV and direct vent appliance venting</td><td>Certified for Category IV and direct vent appliance venting</td></tr>
</table>

⚠ WARNING AL29-4C vent piping — Install a PVC-to-stainless adapter supplied by the vent pipe manufacturer at the boiler vent connection and at the termination (when using Weil-McLain plate or concentric PVC termination). DO NOT mix piping from different vent pipe manufacturers unless using adapters specifically designed for the purpose by the manufacturer.

⚠ WARNING Plastic piping — Do not attempt to connect different types of plastic piping together.

NOTICE Do not use cellular core pipe.

Venting/air piping — general *(continued)*

Vent and air pipe diameters

1. Vent and air pipe diameters can be as specified in

Figure 33 Vent and air pipe diameters options

Boiler models	2" Plastic	3" Plastic or 3" AL29-4C	4" Plastic or 4" AL29-4C
80 & 105	Yes	Yes	No
155	No	Yes	No
230	No	Yes	Yes
310	No	No	Yes

Use appropriate adapters where needed — Ultra-80 through -155 require 3.5 inch outside diameter pipe at the boiler vent and air connections. Ultra-230 & -310 boilers require 4.5 inch outside diameter pipe at the boiler vent and air connections. Concentric terminations and the Weil-McLain sidewall plate require 3.5 inch outside diameter pipe.

Vent and air pipe minimum length

1. Vent pipe and air pipe must each be at least 2 feet long, with 2 elbows if sidewall venting or 1 elbow if vertical venting.

Vent and air pipe maximum length

1. Maximum length of pipe depends on the termination method, the boiler size and the pipe diameter used.
2. See the maximum length information for each termination method listed in the appropriate section.

Vent and air pipe termination options

1. Vent and air piping must terminate out the same side (or roof) of the building, using only one of the methods described in this manual. Refer to the associated installation manual section for the method chosen.
2. Sidewall options (Figure 34, left side):
   a. Weil-McLain termination plate (kit included with boiler).
   b. Concentric PVC pipe (requires special kit, page 93).
   c. Separate air pipe and vent pipe, .
3. Vertical options (Figure 34, right side):
   a. Concentric PVC pipe (requires special kit, page 93).
   b. Separate air pipe and vent pipe.

Vent and air pipe installation sequence

Step 1 Install the boiler.

Step 2 Determine the termination method — sidewall or vertical, concentric or separate pipes, etc.

Step 3 Determine proper location for wall or roof penetration for each termination.

Step 4 Install termination assembly as described in this manual.

Step 5 Install air and vent piping from boiler to termination.

Step 6 Install pipe supports and brackets as required.

Figure 34 Vent and air termination options

Sidewall termination

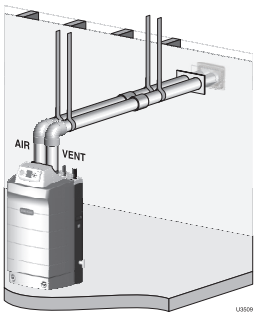

Weil-McLain sidewall termination plate
(Go to page 33)

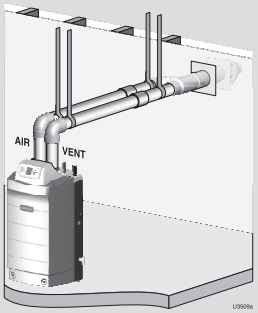

Weil-McLain 3" PVC concentric termination
(Go to page 36)

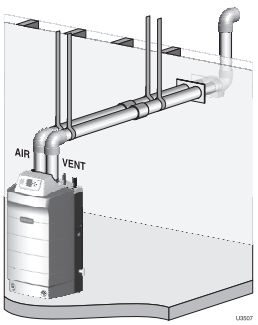

Sidewall termination with separate vent and air pipes
(Go to page 39)

Vertical termination

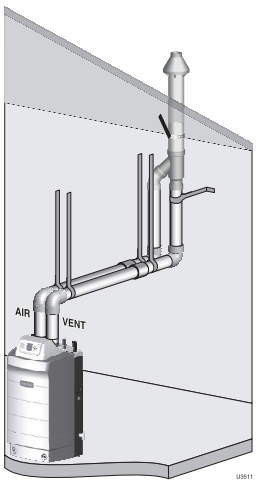

Weil-McLain 3" PVC concentric termination
(Go to page 42)

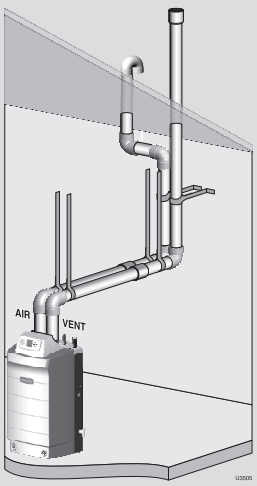

Vertical termination with separate vent and air pipes
(Go to page 46)

Sidewall vent/air termination: *Weil-McLain plate*

Termination kit — Weil-McLain vent/air plate

1. The Weil-McLain sidewall vent/air kit is shipped with each Ultra boiler.

⚠WARNING Provide pipe adapters as needed for 2" or 4" plastic piping or for AL29-4C vent pipe.

Allowable vent/air pipe materials

1. Use only the materials listed in Figure 32, page 31.

Maximum piping length

1. Locate the termination such that the total air piping and vent piping from the boiler to the termination will not exceed the maximum length given in Figure 35.
2. Maximum lengths listed in Figure 35 allow for 2 elbows. Additional elbows required a reduction in maximum length as explained in the table notes.

Connecting from termination to boiler

1. Install the termination as instructed in the following. Then proceed to page 48 to complete the air and vent piping between the termination and the boiler.

Determine locations for terminations

⚠WARNING A gas vent extending through an exterior wall shall not terminate adjacent to the wall or below building extensions such as eaves, parapets, balconies or decks. Failure to comply could result in severe personal injury, death or substantial property damage.

1. Locate the vent/air terminations using the following guidelines.
2. You must consider the surroundings when terminating the vent and air:
   a. Position the vent termination where vapors will not damage nearby shrubs, plants or air conditioning equipment or be objectionable.
   b. The flue products will form a noticeable plume as they condense in cold air. Avoid areas where the plume could obstruct window views.
   c. Prevailing winds could cause freezing of condensate and water/ice buildup where flue products impinge on building surfaces or plants.

Figure 35 Maximum piping lengths for Weil-McLain sidewall vent/air plate

Boiler Ultra–	Maximum Piping, 2" *		Maximum Piping, 3" *		Maximum Piping, 4" *	
	Feet	Elbows	Feet	Elbows	Feet	Elbows
80	30	2	100	2	Not allowed	
105	30	2	100	2		
155	Not allowed		100	2		
230	Not allowed		30	2	100	2
310	Not allowed		Not allowed		100	2

* Install pipe reducers to adapt from pipe size used to the 3.5 inch outside diameter required at the termination. You do not have to reduce allowable pipe length for the reducers. Also install reducers as necessary where connecting to the boiler vent and air connections.

For piping using more than 2 elbows, reduce maximum allowable length:

- 7 feet for each additional 4-inch elbow (90° or 45°)
- 7 feet for each additional 3-inch long radius elbow
- 16 feet for each 3-inch short radius elbow
- 7 feet for each 3-inch 45-degree elbow.

Figure 36 Termination location — Weil-McLain vent/air plate — height above grade or snow line

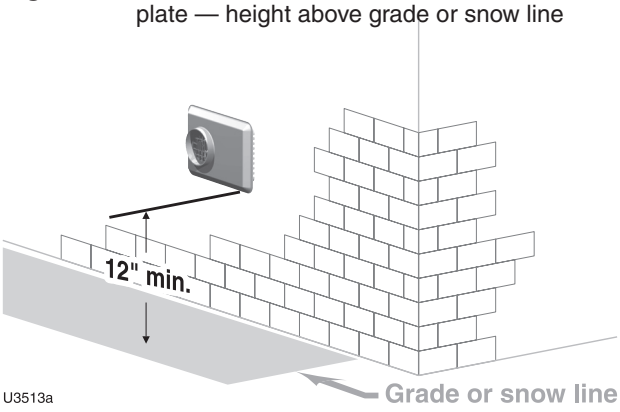

Sidewall vent/air termination: *Weil-McLain plate* (continued)

d. Avoid possibility of accidental contact of flue products with people or pets.

e. Do not locate the terminations where wind eddies could affect performance or cause recirculation, such as inside building corners, near adjacent buildings or surfaces, window wells, stairwells, alcoves, courtyards or other recessed areas.

f. Do not terminate above any door or window or under a deck. Condensate can freeze, causing ice formations.

g. Locate or guard vent to prevent condensate damage to exterior finishes.

3. Maintain clearances as shown in Figure 36, Figure 37, Figure 38 and Figure 39. Also maintain the following:

   a. Vent must terminate:
      - At least 6 feet from adjacent walls.
      - No closer than 5 feet below roof overhang.
      - At least 7 feet above any public walkway.
      - At least 3 feet above any forced air intake within 10 feet.
      - No closer than 12 inches below or horizontally from any door or window or any other gravity air inlet.

   b. Air inlet must terminate at least 12" above grade or snow line

   c. Do not terminate closer than 4 feet horizontally (above or below) from any electric meter, gas meter, regulator, relief valve or other equipment.

4. Locate terminations so they are not likely to be damaged by foreign objects, such as stones or balls, or subject to buildup of leaves or sediment.

Multiple vent/air terminations

1. When terminating multiple Ultra boilers, terminate each vent/air connection as described in this manual.

⚠WARNING All vent pipes and air inlets must terminate at the same height to avoid possibility of severe personal injury, death or substantial property damage.

2. Place wall penetrations to obtain minimum clearance as shown in Figure 39 for U. S. installations. For Canadian installations, provide clearances required by CSA B149.1 or B149.2 Installation Code.

3. The air inlet of an Ultra boiler is part of a direct vent connection. It is not classified as a forced air intake with regard to spacing from adjacent boiler vents.

4. Combustion air (NOT vent piping) can be manifolded as shown in Figure 31, page 30.

Install terminations — Weil-McLain vent/air plate

NOTICE The inside and outside plates are stamped to identify the exhaust (vent) and intake (air) openings. Make sure to orient the plates correctly.

1. Locate termination opening and avoid obstructions:

   a. Use the template supplied with the termination kit.

   b. Locate the template on the outside building surface where the penetration is to be made.

Figure 37 Termination location — Weil-McLain vent/air plate — clearances to openings

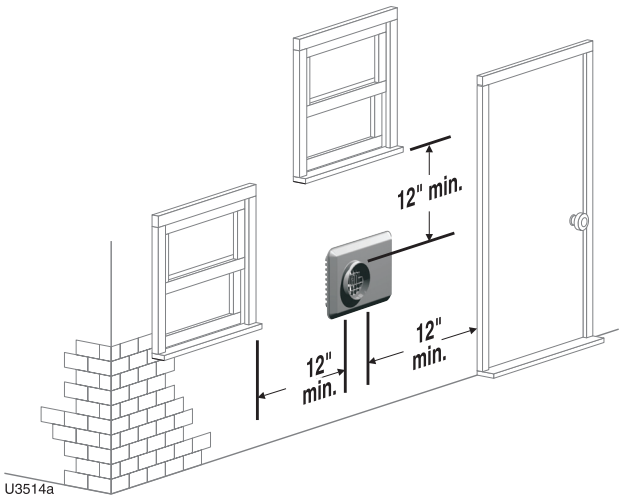

Figure 38 Termination location — Weil-McLain vent/air plate — clearances to public walkway or forced air intake

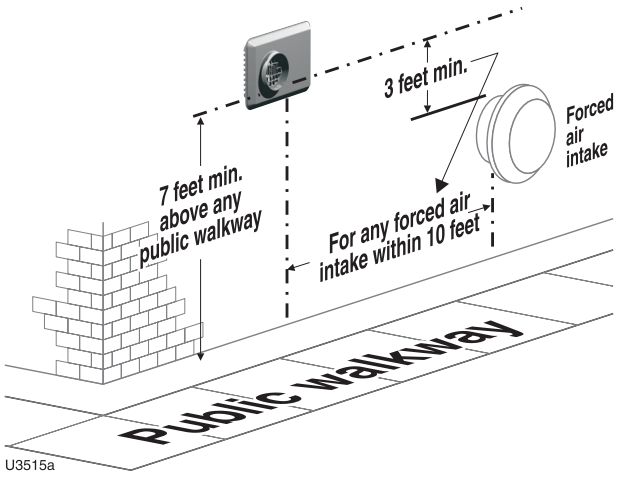

Figure 39 Termination location — Weil-McLain vent/air plate — multiple boilers — clearance from vent of one to air intake of the next

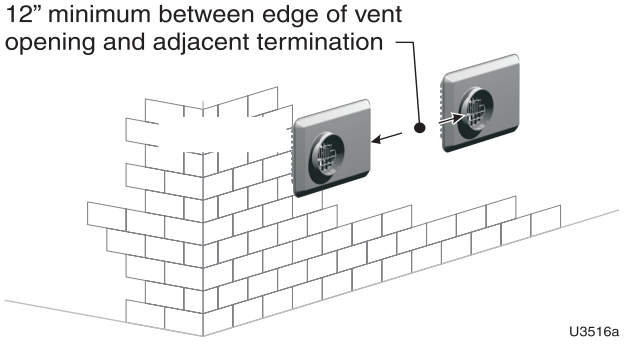

Sidewall vent/air termination: *Weil-McLain plate (continued)*

c. Make sure there will be no obstructions that might prevent proper placement of the termination.
d. Use the template to mark the locations for the four mounting holes, flue pipe and air pipe. Level the template with a spirit level.

⚠WARNING For the Weil-McLain plate, the template must be level to ensure the flue and air pipe will be side-to-side, as shown in Figure 40. Failure to comply could result in severe personal injury, death or substantial property damage.

e. Cut holes in the wall as shown in Figure 41, using the location marks made with the template. For best results, use a small-diameter, long drill bit to drill centering holes for the flue and air pipe openings. Then drill the large openings from both the inside and outside.
f. The flue pipe and air pipe may be run through a rectangular cutout (as marked on the template) in lieu of two separate holes if desired.

2. Drill holes for the screws or plastic anchors to secure the outside plate. Install the outside plate and mount the termination on the plate (temporarily).
   a. Cut the flue pipe so the extension through the wall will cause the vent pipe to fully extend into the termination socket.
   b. Cut the air pipe so the extension through the wall will butt the air pipe against the stops inside the termination.
   c. When using 3-inch vent piping with a 4-inch termination (Ultra-230 applications), increase the flue pipe size to 4 inch before the pipe passes through the wall. This is required to obtain a seal between the flue pipe and the termination.
   d. Temporarily slide the flue and air pipes through the opening(s). Slide the inside wall plate over the two pipes and into position on the inside wall.
   e. Position the inside plate so the flue pipe and air pipe slope downward slightly toward the boiler (1/4" per foot).
   f. Mark the four (4) mounting holes for the plate.
   g. Remove the vent and air pipe, drill the four mounting holes, and mount the inside plate.
3. Test fit the vent/air termination on the vent pipe. Make sure the vent pipe fully penetrates the termination socket and the air pipe butts against the interior stops.
4. Apply silicon RTV sealant to the interior of the vent termination and slide onto vent pipe. Rotate slightly to spread the silicon to ensure a tight seal around the vent pipe.
5. Secure the termination in place using the four #10 x ½" sheet metal screws and lock washers (see Figure 41).

Figure 40 Hole preparation in wall — Weil-McLain vent/air plate

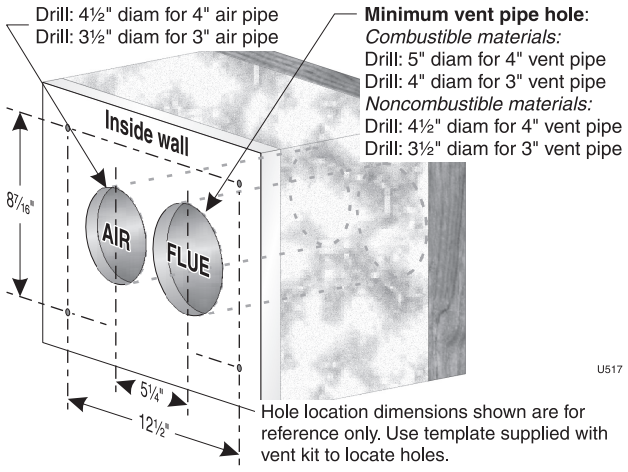

Figure 41 Termination assembly — Weil-McLain vent/air plate

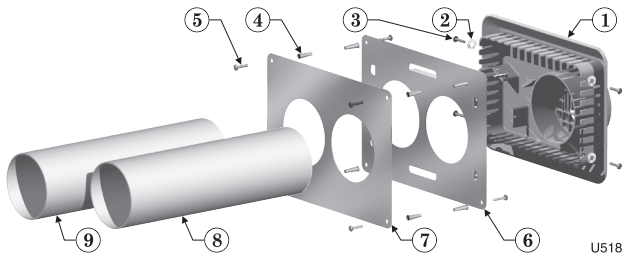

1	Vent termination (3" or 4")	6	Outer mounting plate
2	Lock washer, #10 (4)	7	Inner mounting plate
3	Sheet metal screw, #10 x ½" (4)	8	Vent pipe (butt to screen in termination)
4	Plastic wall anchor (8)	9	Air pipe (butt to stops in termination)
5	Sheet metal screw, #10 x 1¼" (8)		

Sidewall vent/air termination: *3" PVC concentric*

Termination kit — Weil-McLain 3" PVC concentric termination

1. The Weil-McLain 3" PVC concentric termination kit must be purchased separately. See Figure 101, page 93 for part number.

WARNING Use only the Weil-McLain 3" PVC concentric termination kit for concentric venting. Provide pipe adapters as needed for 2" or 4" plastic piping or for AL29-4C vent pipe.

Allowable vent/air pipe materials

1. Use only the materials listed in Figure 32, page 31.

Maximum piping length

1. Locate the termination such that the total air piping and vent piping from the boiler to the termination will not exceed the maximum length given in Figure 42.
2. Maximum lengths listed in Figure 42 allow for 1 elbow. Additional elbows required a reduction in maximum length as explained in the table notes.

Connecting from termination to boiler

1. Install the termination as instructed in the following. Then proceed to page 48 to complete the air and vent piping between the termination and the boiler.
2. The center lines between the air and vent are wider at the concentric termination connections than at the boiler. See Figure 60, page 45 for suggestions on adjusting the spacing when required. In addition to the method given there, you can rotate the Y-fitting slightly, which will cause the air pipe to be slightly higher or lower than the vent, but the center lines will match those at the boiler vent and air connections.

Determine locations for terminations

WARNING A gas vent extending through an exterior wall shall not terminate adjacent to the wall or below building extensions such as eaves, parapets, balconies or decks. Failure to comply could result in severe personal injury, death or substantial property damage.

1. Locate the vent/air terminations using the following guidelines.
2. You must consider the surroundings when terminating the vent and air:
   a. Position the vent termination where vapors will not damage nearby shrubs, plants or air conditioning equipment or be objectionable.

Figure 42 Maximum piping lengths for Weil-McLain 3" PVC concentric termination

Boiler Ultra–	Maximum Piping, 2" *		Maximum Piping, 3" *		Maximum Piping, 4" *	
	Feet	Elbows	Feet	Elbows	Feet	Elbows
80	30	1	100	1	Not allowed	
105	30	1	100	1		
155	Not allowed		100	1		
230	Not allowed		30	1	70	1
310	Not allowed		Not allowed		70	1

* Install pipe reducers to adapt from pipe size used to the 3.5 inch outside diameter required at the termination. You do not have to reduce allowable pipe length for the reducers. Also install reducers as necessary where connecting to the boiler vent and air connections.

You do not have to reduce allowable pipe length for the 45° elbow used to connect to the air fitting on the concentric assembly.

For piping using more than 1 elbow, reduce maximum allowable length:

- 7 feet for each additional 4-inch elbow (90° or 45°)
- 7 feet for each additional 3-inch long radius elbow
- 16 feet for each 3-inch short radius elbow
- 7 feet for each 3-inch 45-degree elbow.

Figure 43 Termination location — Weil-McLain vent/air plate — height above grade or snow line

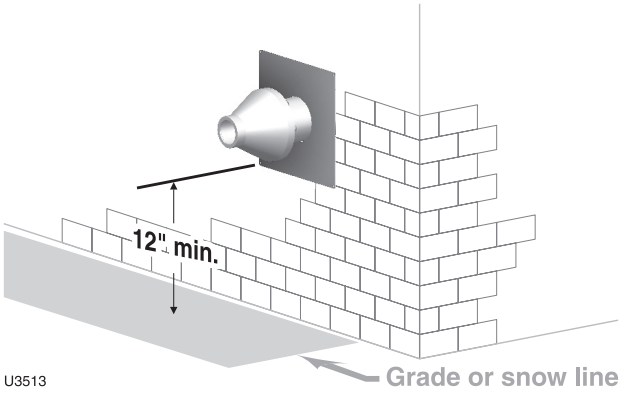

Sidewall vent/air termination: *3" PVC concentric (continued)*

b. The flue products will form a noticeable plume as they condense in cold air. Avoid areas where the plume could obstruct window views.
c. Prevailing winds could cause freezing of condensate and water/ice buildup where flue products impinge on building surfaces or plants.
d. Avoid possibility of accidental contact of flue products with people or pets.
e. Do not locate the terminations where wind eddies could affect performance or cause recirculation, such as inside building corners, near adjacent buildings or surfaces, window wells, stairwells, alcoves, courtyards or other recessed areas.
f. Do not terminate above any door or window or under a deck. Condensate can freeze, causing ice formations.
g. Locate or guard vent to prevent condensate damage to exterior finishes.

3. Maintain clearances as shown in Figure 35, Figure 37, Figure 38 and Figure 39. Also maintain the following:
   a. Vent must terminate:
      - At least 6 feet from adjacent walls.
      - No closer than 5 feet below roof overhang.
      - At least 7 feet above any public walkway.
      - At least 3 feet above any forced air intake within 10 feet.
      - No closer than 12 inches below or horizontally from any door or window or any other gravity air inlet.
   b. Air inlet must terminate at least 12" above grade or snow line
   c. Do not terminate closer than 4 feet horizontally (above or below) from any electric meter, gas meter, regulator, relief valve or other equipment.
4. Locate terminations so they are not likely to be damaged by foreign objects, such as stones or balls, or subject to buildup of leaves or sediment.

Multiple vent/air terminations

1. When terminating multiple Ultra boilers, terminate each vent/air connection as described in this manual.

⚠WARNING All vent pipes and air inlets must terminate at the same height to avoid possibility of severe personal injury, death or substantial property damage.

2. Place wall penetrations to obtain minimum clearance as shown in Figure 39 for U. S. installations. For Canadian installations, provide clearances required by CSA B149.1 or B149.2 Installation Code.
3. The air inlet of an Ultra boiler is part of a direct vent connection. It is not classified as a forced air intake with regard to spacing from adjacent boiler vents.
4. Combustion air (NOT vent piping) can be manifolded as shown in Figure 31, page 30.

Install terminations — concentric pipes

1. Assemble the vent termination as described for vertical concentric terminations, beginning on page 43.

⚠WARNING If necessary, you can shorten the lengths of the inner and outer pipes for a shorter finished assembly. But you must ensure the pipes butt correctly at both ends. Failure to properly assemble the concentric termination can result in flue gas recirculation, causing possible severe personal injury or death.

Figure 44 Termination location — Weil-McLain vent/air plate — clearances to openings

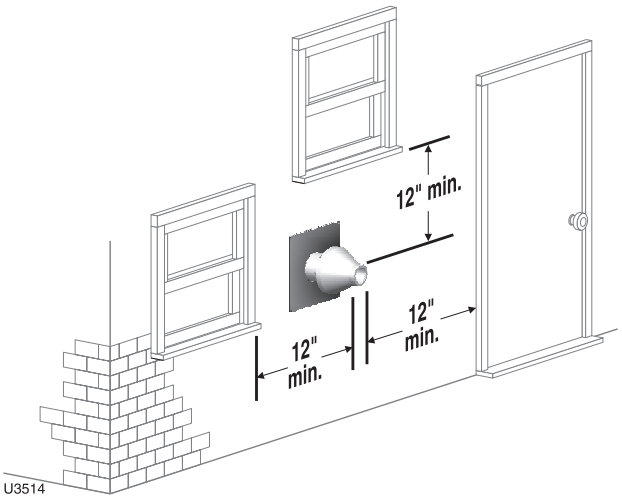

Figure 45 Termination location — Weil-McLain vent/air plate — clearances to public walkway or forced air intake

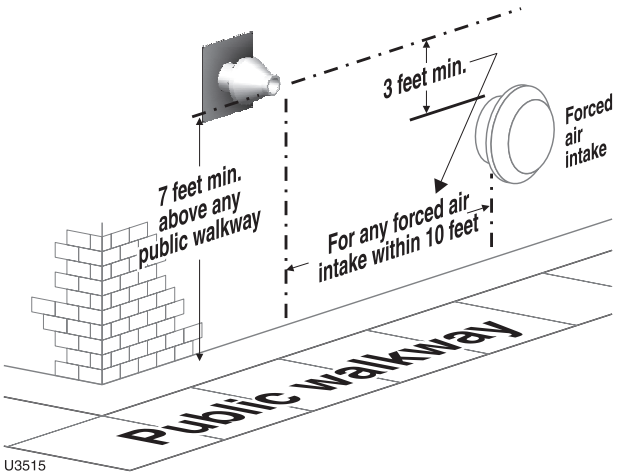

Figure 46 Termination location — Weil-McLain vent/air plate — multiple boilers — clearance from vent of one to air intake of the next

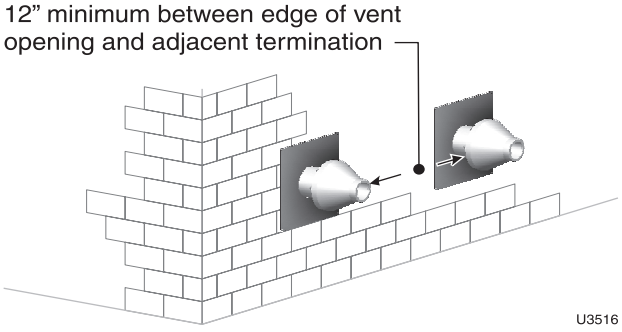

Sidewall vent/air termination: *3" PVC concentric (continued)*

2. Wall penetration — Preferably, use a thimble with a 4½-inch hole. If not using a thimble, carefully use a hole saw to cut a hole not larger than 4¾ inches in diameter through the wall. The finished hole must provide a solid stop for the rain cap ribs, as shown in the inset to Figure 47, page 38.
3. Secure the termination in place so the rain cap will butt against the outside wall or outer thimble plate as shown in Figure 47.
4. Before beginning vent and air piping from the boiler to the concentric termination, mount and secure the concentric termination as shown in Figure 47.

⚠WARNING The vent and air piping must be securely supported, and must not rest its weight on the boiler fittings. Failure to properly support the vent and air piping could result in vent piping damage, resulting in possible severe personal injury, death or substantial property damage.

The supports/bracing used must support the termination assembly to prevent vertical slippage or movement.

The clamps used on the outside of the termination pipe must not cut into the pipe or contain sharp edges that could cause a crack to form.

⚠WARNING When inserting the partially-assembled termination kit through the roof penetration, wrap plastic or other protection over the end of the exposed assembly to prevent debris from entering the pipes. If the air passages become blocked, the boiler will not operate. Once the rain cap has been cemented to the assembly, there is no way to correct the problem. The assembly would have to be replaced if it were cut to be removed and cleaned. Altering the assembly in any way could result in severe personal injury or death due to toxic flue product emissions.

⚠WARNING When using AL294C stainless vent pipe, use the vent pipe manufacturer's 3-inch PVC adapter when connecting to the concentric vent attachment.

5. After the assembly has been positioned in the opening and all supports have been attached, install the bird screen and rain cap as follows:
   a. Place the bird screen on the end of the inner pipe as in Figure 59, page 44.
   b. Cement the rain cap in place as shown.

Figure 47 Installing and supporting the concentric sidewall vent assembly

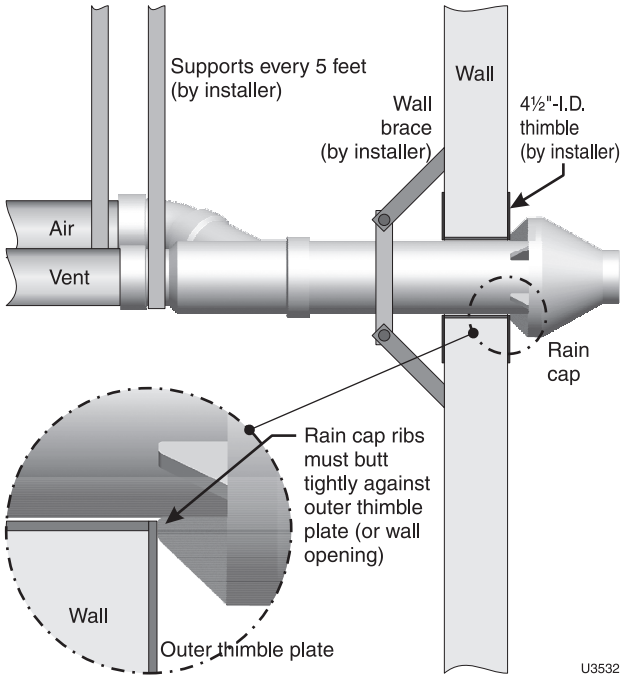

⚠WARNING Ensure that the wall material is strong enough to prevent the rain cap from being pushed inward if struck or pushed from the outside.

Sidewall vent/air termination: *Separate pipes*

Allowable vent/air pipe materials

1. Use only the materials listed in Figure 32, page 31.
2. Purchase termination plates and bird screens separately. See the parts list at the end of this manual.

Maximum piping length

1. Locate the terminations such that the total air piping and vent piping from the boiler to the termination will not exceed the maximum length given in Figure 48.
2. Maximum lengths listed in Figure 48 allow for 2 elbows. Additional elbows required a reduction in maximum length as explained in the table notes.

Connecting from termination to boiler

1. Install the terminations as instructed in the following. Then proceed to page 48 to complete the air and vent piping between the termination and the boiler.

Determine location — separate elbows

⚠WARNING A gas vent extending through an exterior wall shall not terminate adjacent to the wall or below building extensions such as eaves, parapets, balconies or decks. Failure to comply could result in severe personal injury, death or substantial property damage.

1. Locate the vent/air terminations using the following guidelines.
2. The air piping must terminate in a down-turned elbow as shown in Figure 49. This arrangement avoids recirculation of flue products into the combustion air stream.
   a. Apply the configuration on the left side of Figure 49 unless the terminations would fail to meet minimum clearance to grade or snow line.
   b. Apply the configuration on the right side of Figure 49 when the terminations need to be raised higher to meet clearance to grade or snow line.
   c. The vent and air pipes may run up as high as 4 feet, as shown in Figure 49 right side with no enclosure. The vent and air pipes must be secured with braces, and all clearances and lengths must be maintained. Space braces no further than 24 inches apart. (See WARNING below for extremely cold climates.)
   d. External venting greater than 4 feet requires an enclosure around the vent and air pipes. The vent and air terminations must exit through the enclosure as shown in Figure 49, maintaining all required clearances.
3. The vent piping must terminate in an elbow pointed outward or away from the air inlet, as shown in Figure 49.

⚠WARNING Do not exceed the maximum lengths of the outside vent piping shown in Figure 49. Excessive length exposed to the outside could cause freezing of condensate in the vent pipe, resulting in potential boiler shutdown. In extremely cold climates, install an insulated chase around the vent piping, particularly when using longer lengths. The chase must allow for inspection of the vent pipe, and insulation must be protected from water.

Figure 48 Maximum piping lengths for separate vent and air pipe sidewall termination

Boiler Ultra–	Maximum Piping, 2" *		Maximum Piping, 3" *		Maximum Piping, 4" *	
	Feet	Elbows	Feet	Elbows	Feet	Elbows
80	30	2	100	2	Not allowed	
105	30	2	100	2		
155	Not allowed		100	2		
230	Not allowed		30	2	100	2
310	Not allowed		Not allowed		100	2

* Install pipe reducers to adapt from pipe size used to the 3.5-inch outside diameter required at the termination. You do not have to reduce allowable pipe length for the reducers. Also install reducers as necessary where connecting to the boiler vent and air connections.

For piping using more than 2 elbows, reduce maximum allowable length:
- 7 feet for each additional 4-inch elbow (90° or 45°)
- 7 feet for each additional 3-inch long radius elbow
- 16 feet for each 3-inch short radius elbow
- 7 feet for each 3-inch 45-degree elbow.

Figure 49 Sidewall termination — separate pipes — configuration options and minimum clearances from vent to air terminations

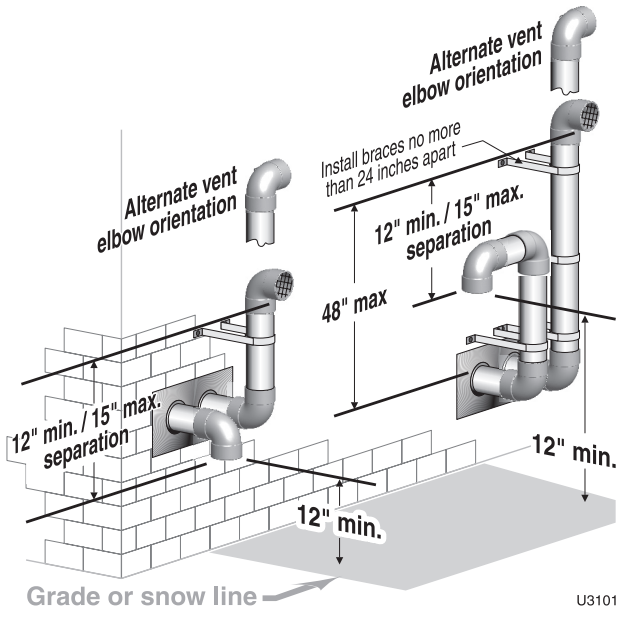

Sidewall vent/air termination: *Separate pipes* *(continued)*

4. You must consider the surroundings when terminating the vent and air:
   a. Position the vent termination where vapors will not damage nearby shrubs, plants or air conditioning equipment or be objectionable.
   b. The flue products will form a noticeable plume as they condense in cold air. Avoid areas where the plume could obstruct window views.
   c. Prevailing winds could cause freezing of condensate and water/ice buildup where flue products impinge on building surfaces or plants.
   d. Avoid possibility of accidental contact of flue products with people or pets.
   e. Do not locate the terminations where wind eddies could affect performance or cause recirculation, such as inside building corners, near adjacent buildings or surfaces, window wells, stairwells, alcoves, courtyards or other recessed areas.
   f. Do not terminate above any door or window or under a deck. Condensate can freeze, causing ice formations.
   g. Locate or guard vent to prevent condensate damage to exterior finishes.
5. Maintain clearances as shown in the illustrations in this manual section. Also maintain the following:
   a. Vent must terminate:
      - At least 6 feet from adjacent walls.
      - No closer than 5 feet below roof overhang.
      - At least 7 feet above any public walkway.
      - At lease 3 feet above any forced air intake within 10 feet.
      - No closer than 12 inches below or horizontally from any door or window or any other gravity air inlet.
   b. Do not terminate closer to 4 feet horizontally from any electric meter, gas meter, regulator, relief valve or other equipment. Never terminate above or below any of these within 4 feet horizontally.
6. Locate terminations so they are not likely to be damaged by foreign objects, such as stones or balls, or subject to buildup of leaves or sediment.
7. Do not connect any other appliance to the vent pipe or multiple boilers to a common vent pipe.

Completing the vent/air piping

1. Install vent/air penetrations as explained in the following pages before installing vent and air piping from the boiler to the terminations. Insert piping from boiler air and vent connections, then attach exterior termination piping.
2. Follow instructions beginning on page 48 to complete piping from boiler to termination.

Multiple vent/air terminations

1. When terminating multiple Ultra boilers, terminate each vent/air connection as described in this manual.

⚠WARNING All vent pipes and air inlets must terminate at the same height to avoid possibility of severe personal injury, death or substantial property damage.

Figure 50 Sidewall termination with separate pipes — clearances to openings

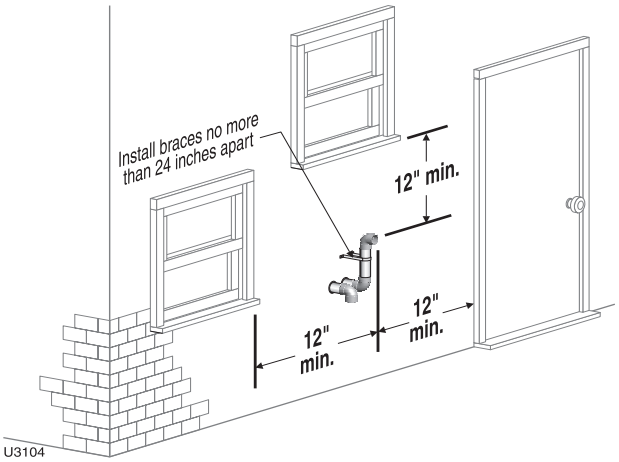

Figure 51 Sidewall termination with separate pipes — clearances to public walkway or forced air intake

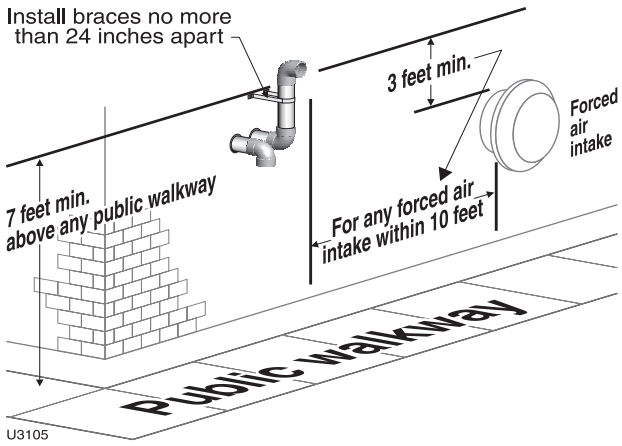

Figure 52 Multiple terminations — separate pipes — clearance from vent of one to air intake of the next

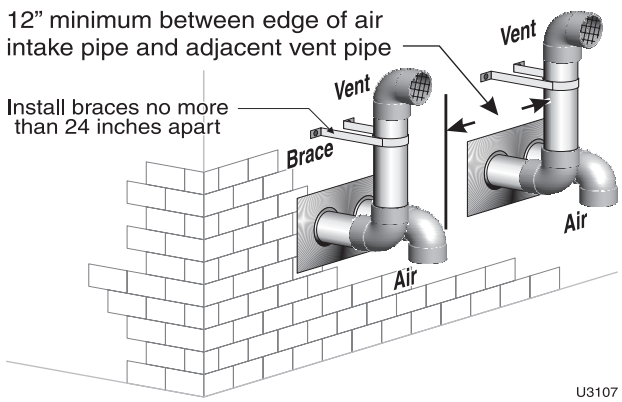

Sidewall vent/air termination: *Separate pipes* (continued)

2. Place wall penetrations to obtain minimum clearance of 12 inches between vent pipe and adjacent air inlet elbow, as shown in Figure 52, page 40 for U. S. installations.
3. For Canadian installations, provide clearances required by CSA B149.1 or B149.2 Installation Code.
4. The air inlet of an Ultra boiler is part of a direct vent connection. It is not classified as a forced air intake with regard to spacing from adjacent boiler vents.
5. Combustion air (NOT vent piping) can be manifolded as shown in Figure 31, page 30.

Prepare wall penetrations

1. Air pipe penetration:
   a. Cut a hole for the air pipe. Size the air pipe hole as close as desired to the air pipe outside diameter.
2. Vent pipe penetration:
   a. Cut a hole for the vent pipe. For either combustible or non-combustible construction, size the vent pipe hole at least 0.4" larger than the vent pipe diameter:
      - 4" hole for 3" PVC
      - 5" hole for 4" PVC
   b. Insert a galvanized metal thimble in the vent pipe hole as shown in Figure 54.
3. Use a sidewall termination plate as a template for correct location of hole centers. Sidewall termination plates must be purchased separately. See the parts list at the end of this manual for part numbers.
4. Follow all local codes for isolation of vent pipe when passing through floors or walls.
5. Seal exterior openings thoroughly with exterior caulk.

Termination and fittings

1. Prepare the vent termination elbow and the air termination elbow (Figure 54) by inserting the bird screens. Bird screens must be purchased separately. See the parts list at the end of this manual for part numbers.
2. When completed, the air termination coupling must be oriented at least 12 inches below the vent termination and at least 12 inches above grade or snow line as shown in Figure 49, page 39.
3. You can orient the vent termination elbow either directly outward or 90 degrees away from the air inlet elbow as shown in Figure 49, page 39.
4. Maintain the required dimensions of the finished termination piping as shown in Figure 49, page 39.
5. Do not extend exposed vent pipe outside of building more than shown in this document. Condensate could freeze and block vent pipe.

Figure 53 Multiple terminations — separate pipes — clearance from vent of one to air intake of the next — alternate configuration of air and vent terminations

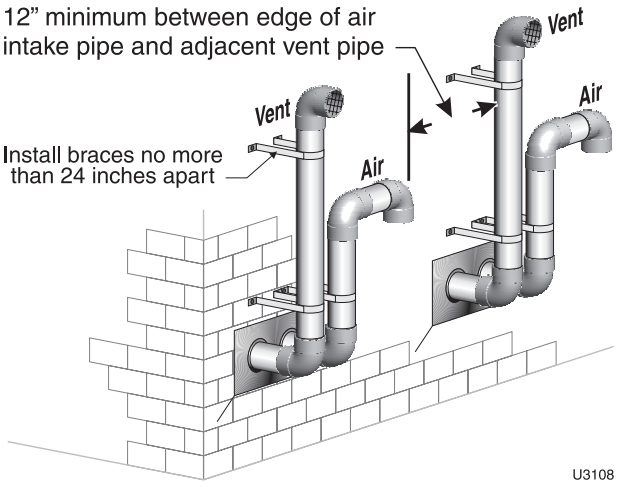

Figure 54 Sidewall termination assembly — using separate pipes

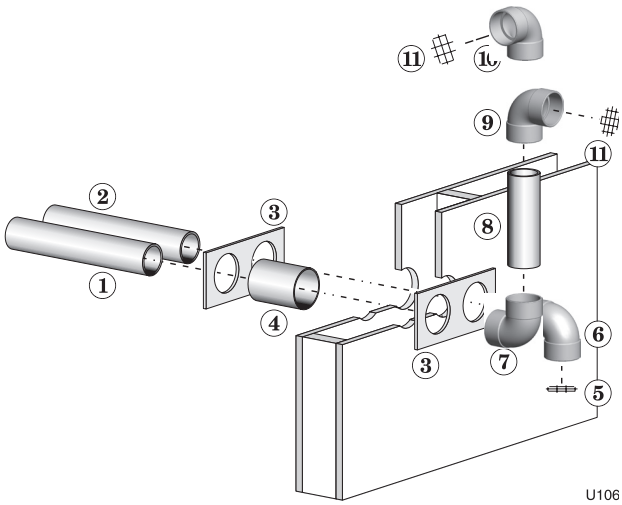

1	Vent piping	7	Elbow
2	Air piping	8	Nipple
3	Sidewall termination plates, by installer	9	Elbow (vent termination)
4	Galvanized thimbles, by installer	10	Alternate elbow orientation
5	Bird screen (air), by installer	11	Bird screen (vent termination) — supplied by installer
6	Air inlet elbow		

Vertical vent/air termination: *3" PVC concentric*

Termination kit — Weil-McLain 3" PVC concentric termination

1. The Weil-McLain 3" PVC concentric termination kit must be purchased separately. See Figure 101, page 93 for part number.

WARNING Use only the Weil-McLain 3" PVC concentric termination kit for concentric venting. Provide pipe adapters as needed for 2" or 4" plastic piping or for AL29-4C vent pipe.

2. Purchase a bird screen separately. See the parts list at the end of this manual.

Allowable vent/air pipe materials

1. Use only the materials listed in Figure 32, page 31.

Maximum piping length

1. Locate the termination such that the total air piping and vent piping from the boiler to the termination will not exceed the maximum length given in Figure 55.
2. Maximum lengths listed in Figure 55 allow for 1 elbow. Additional elbows required a reduction in maximum length as explained in the table notes.

Connecting from termination to boiler

1. Install the termination as instructed in the following. Then proceed to page 48 to complete the piping between the termination and the boiler.

Determine location

Locate the concentric vent/air termination using the following guidelines:

1. The concentric vent/air assembly must terminate as shown in Figure 56.
2. The vent and air piping connected to the termination assembly must comply with the instructions in this supplement.
3. You must consider the surroundings when terminating the vent and air:
   a. Position the termination where vent vapors will not damage nearby shrubs, plants or air conditioning equipment or be objectionable.
   b. The flue products will form a noticeable plume as they condense in cold air. Avoid areas where the plume could obstruct window views.
   c. Prevailing winds could cause freezing of condensate and water/ice buildup where flue products impinge on building surfaces or plants.
   d. Avoid possibility of accidental contact of flue products with people or pets.
   e. Do not locate the termination where wind eddies could affect performance or cause recirculation, such as inside building corners, near adjacent buildings or surfaces, window wells, stairwells, alcoves, courtyards or other recessed areas.
   f. Locate or guard vent outlet to prevent condensate damage to exterior finishes.

Figure 55 Maximum piping lengths for Weil-McLain 3" PVC concentric termination

Boiler Ultra–	Maximum Piping, 2" *		Maximum Piping, 3" *		Maximum Piping, 4" *	
	Feet	Elbows	Feet	Elbows	Feet	Elbows
80	30	1	100	1	Not allowed	
105	30	1	100	1		
155	Not allowed		100	1		
230	Not allowed		30	1	70	1
310	Not allowed		Not allowed		70	1

* Install pipe reducers to adapt from pipe size used to the 3.5 inch outside diameter required at the termination. You do not have to reduce allowable pipe length for the reducers. Also install reducers as necessary where connecting to the boiler vent and air connections.

You do not have to reduce allowable pipe length for the 45° elbow used to connect to the air fitting on the concentric assembly.

For piping using more than 1 elbow, reduce maximum allowable length:

- 7 feet for each additional 4-inch elbow (90° or 45°)
- 7 feet for each additional 3-inch long radius elbow
- 16 feet for each 3-inch short radius elbow
- 7 feet for each 3-inch 45-degree elbow.

Figure 56 Vertical termination — Weil-McLain 3" PVC concentric

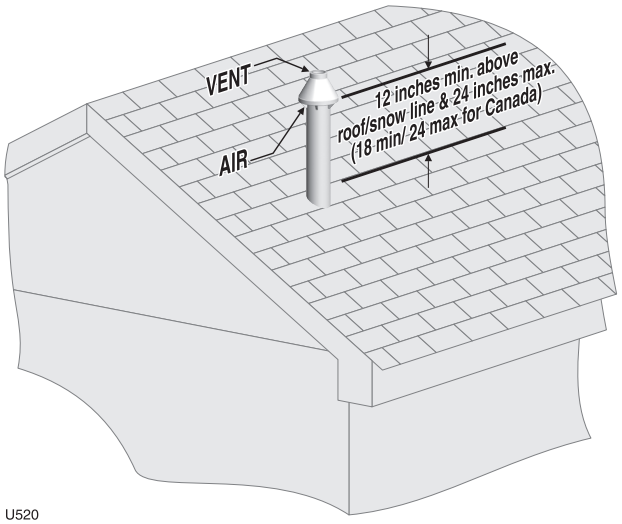

Vertical vent/air termination: *3" PVC concentric (continued)*

4. Maintain clearances to termination as given below:
   a. Vent outlet must be located:
      - At least 6 feet from adjacent walls.
      - No closer than 5 feet below roof overhang.
      - At least 7 feet above any public walkway.
      - At lease 3 feet above any forced air intake within 10 feet.
      - No closer than 12 inches below or horizontally from any door or window or any other gravity air inlet.
   b. Air inlet must terminate at least 12 inches above the roof or snow line as shown in Figure 56, page 42. (For Canada, the minimum is 18 inches.)
   c. Do not terminate closer than 4 feet horizontally from any electric meter, gas meter, regulator, relief valve or other equipment. Never terminate above or below any of these within 4 feet horizontally.
5. Locate termination so it is not likely to be damaged by foreign objects, such as stones or balls, or subject to buildup of leaves or sediment.
6. Do not connect any other appliance to the vent pipe or multiple boilers to a common vent pipe.

Multiple vent/air terminations

1. When terminating multiple Ultra boilers, install the concentric vent/air termination assemblies as described in this supplement.

⚠WARNING All vent outlets must terminate at the same height to avoid possibility of severe personal injury, death or substantial property damage.

2. Place roof penetrations to obtain minimum of 12 inches between centers of adjacent vent pipe of another boiler for U. S. installations (see Figure 57).
3. For Canadian installations, provide clearances required by CSA B149.1 or B149.2 Installation Code.
4. The air inlet of an Ultra boiler is part of a direct vent connection. It is not classified as a forced air intake with regard to spacing from adjacent boiler vents.

Prepare roof penetration

1. Roof penetration hole:
   a. Cut a 5-inch diameter hole to clear the 4½-inch termination outside diameter.
   b. Insert a galvanized metal thimble in the vent pipe hole.
2. Follow all local codes for isolation of vent pipe when passing through floors, ceilings and roofs.
3. Provide flashing and sealing boots sized for the concentric termination outside diameter, 4½ inches.
4. Mount the termination as shown in Figure 60, page 45.

Figure 57 Vertical termination — Weil-McLain 3" PVC concentric — multiple boilers

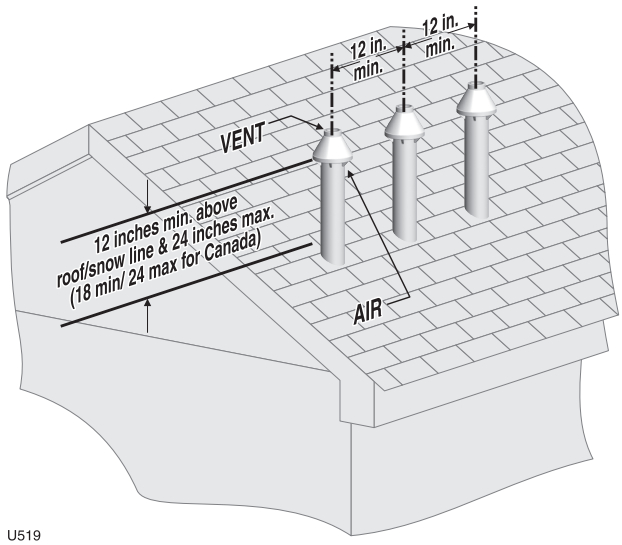

Assembling the concentric termination

1. See Figure 58, page 44 for the dimensions and details of the termination assembly.
2. You must obtain a bird screen separately. See the parts list at the end of this manual. Prepare the bird screen.
   a. Cut the bird screen to fit the outside diameter of the 2½-inch PVC inner pipe supplied with the termination kit (inner pipe O.D. is 2⅞ inches).
3. Partially assemble the vent termination kit in the sequence shown in Figure 59, page 44.

⚠WARNING **DO NOT** install the rain cap and bird screen until the assembly has been inserted through the roof and all supports have been installed. Follow instructions to cover the end of the assembly with plastic before inserting through the roof penetration to prevent debris from blocking the air passages.

4. Use the following procedures to prepare termination components and cement together.
5. Deburr inside and outside of pipe ends.
6. Chamfer outside of each pipe end to ensure even cement distribution when joining.
7. Clean all pipe ends and fittings.
8. Dry thoroughly.
9. Dry assemble entire vent or air piping to ensure proper fit before assembling any joint.

Vertical vent/air termination: *3" PVC concentric (continued)*

Figure 58 Weil-McLain 3" PVC concentric termination assembly — DO NOT attach the rain cap until the termination has been inserted through the roof and all supports have been installed.

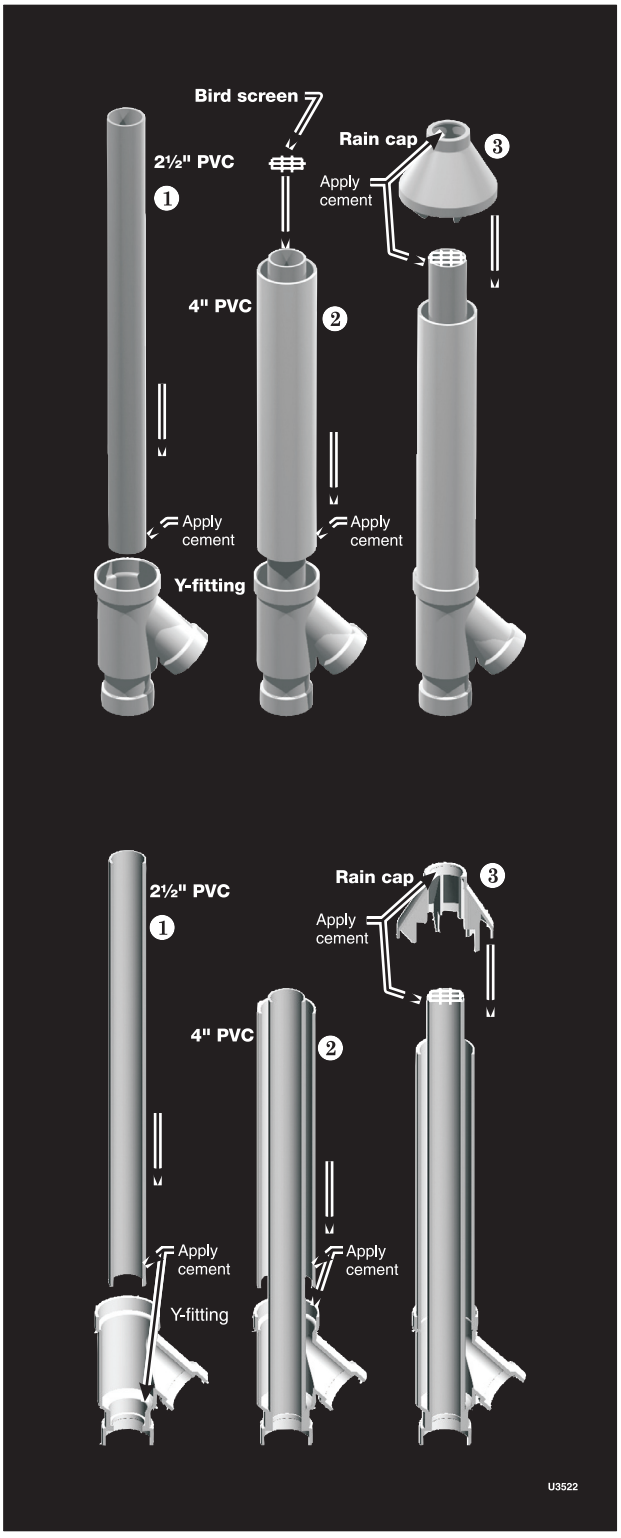

Figure 59 Weil-McLain 3" PVC concentric termination assembly

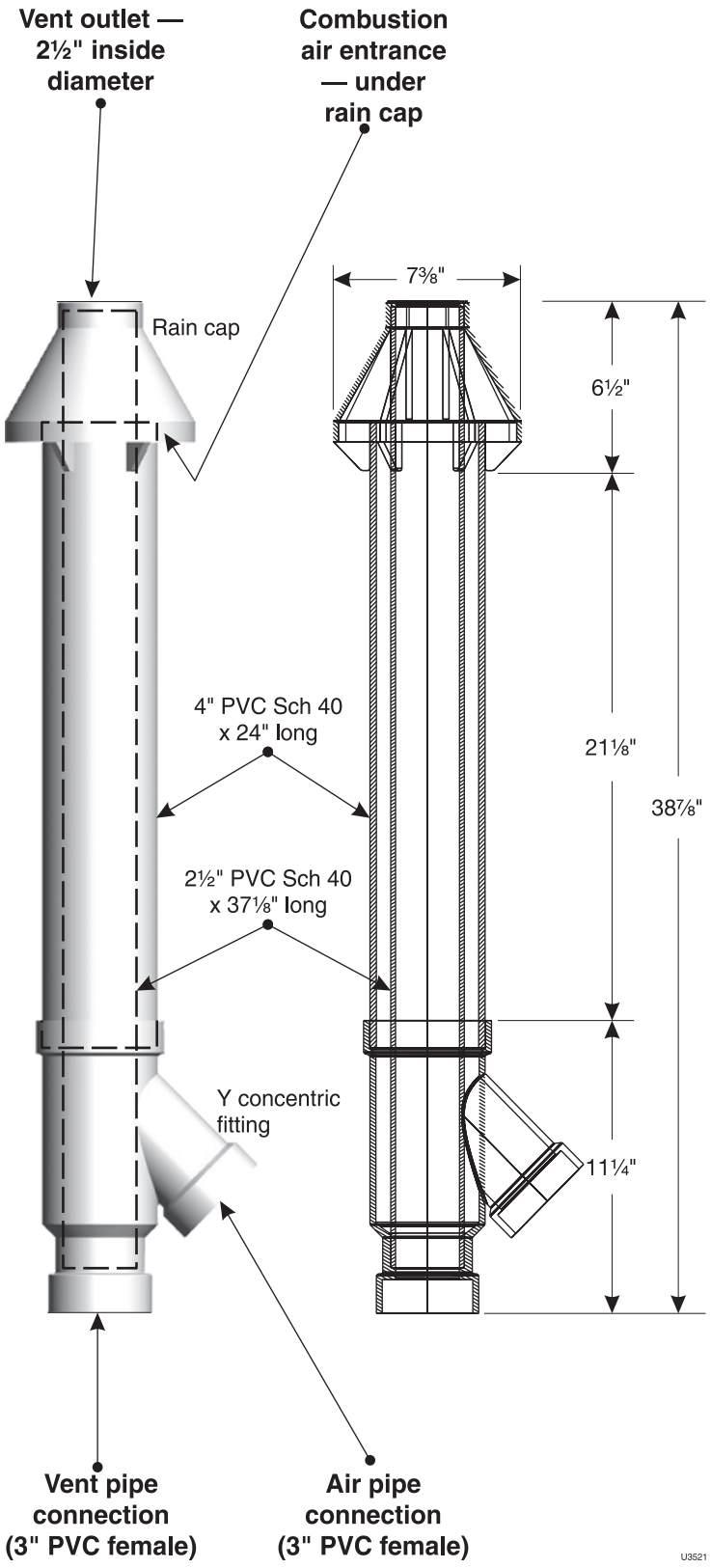

Vertical vent/air termination: *3" PVC concentric (continued)*

10. For each joint:
    a. Handle fittings and pipes carefully to prevent contamination of surfaces.
    b. Apply primer liberally to both joint surfaces — pipe end and fitting socket.
    c. While primer is still damp, lightly apply approved cement to both surfaces in a uniform coating.
    d. Apply a second coat to both surfaces. Avoid using too much cement on sockets to prevent cement buildup inside.
    e. With cement still wet, insert pipe into fitting, twisting ¼ turn. Make sure pipe is fully inserted.

⚠WARNING If necessary, you can shorten the lengths of the inner and outer pipes for a shorter finished assembly. But you must ensure the pipes butt correctly at both ends. Failure to properly assemble the concentric termination can result in flue gas recirculation, causing possible severe personal injury or death.

Mount concentric termination

1. Before beginning vent and air piping from boiler, mount and secure the concentric termination as shown in Figure 60.

⚠WARNING The vent and air piping must be securely supported, and must not rest its weight on the boiler fittings. DO NOT drill or screw into either the vent pipe or air pipe. Failure to properly support the vent and air piping could result in vent piping damage, resulting in possible severe personal injury, death or substantial property damage.

⚠WARNING When inserting the partially-assembled termination kit through the roof penetration, wrap plastic or other protection over the end of the exposed assembly to prevent debris from entering the pipes. If the air passages become blocked, the boiler will not operate. Once the rain cap has been cemented to the assembly, there is no way to correct the problem. The assembly would have to be replaced if it were cut to be removed and cleaned. Altering the assembly in any way could result in severe personal injury or death due to toxic flue product emissions.

⚠WARNING When using AL294C stainless vent pipe, use the vent pipe manufacturer's 3-inch PVC adapter when connecting to the concentric vent attachment.

2. After the assembly has been positioned in the roof opening and all supports have been attached, install the bird screen and rain cap as follows:
    a. Place the bird screen on the end of the inner pipe as in Figure 59, page 44.
    b. Cement the rain cap in place as shown.

Vent termination support

1. Support the concentric vent/air termination at the roof penetration as shown in Figure 60.
    - The supports/bracing used must support the termination assembly to prevent vertical slippage or sideways movement.
    - The clamps used on the outside of the termination pipe must not cut into the pipe or contain sharp edges that could cause a crack to form.

Figure 60 Weil-McLain 3" PVC concentric termination supports

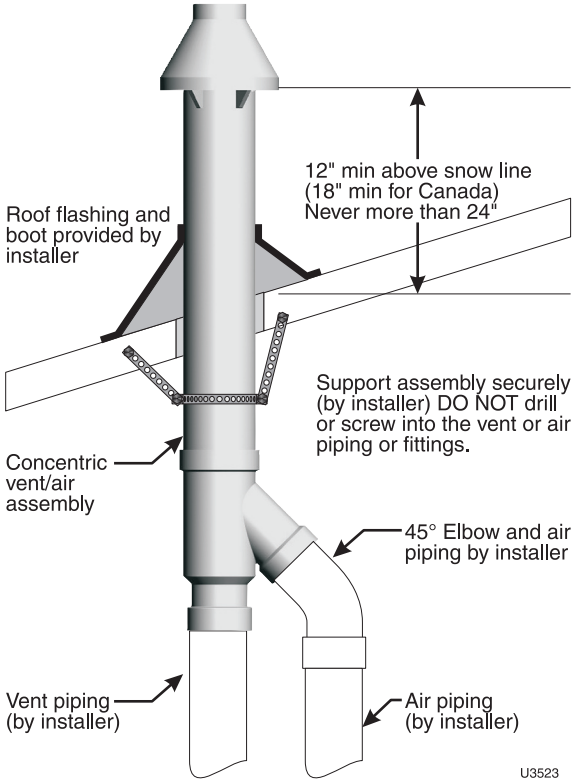

Figure 61 Alternate piping configuration, using (3) 45-degree elbows to obtain closer pipe centers

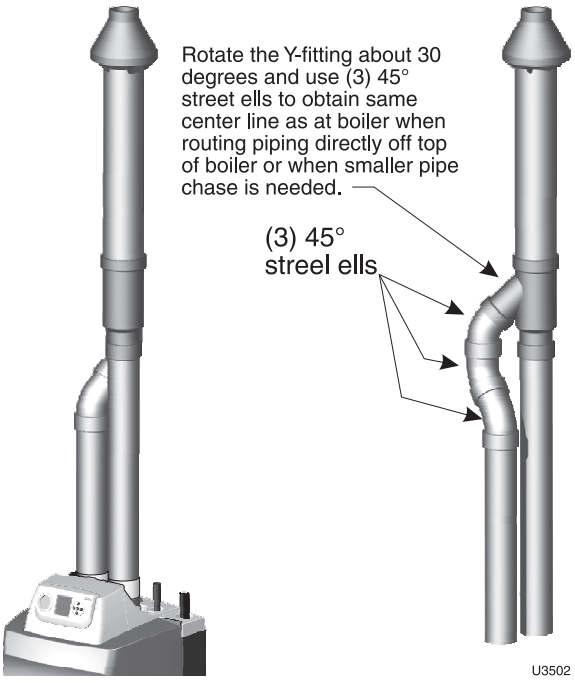

Vertical vent/air termination: *Separate pipes*

Allowable vent/air pipe materials

1. Use only the materials listed in Figure 32, page 31.
2. Purchase bird screens for vent and air terminations separately. See the parts list at the end of this manual.

Maximum piping length

1. Locate the terminations such that the total air piping and vent piping from the boiler to the termination will not exceed the maximum length given in Figure 62.
2. Maximum lengths listed in Figure 62 allow for 1 elbow. Additional elbows required a reduction in maximum length as explained in the table notes.

Connecting from termination to boiler

1. Install the termination penetrations as instructed in the following. Then proceed to page 48 to complete the piping between the termination and the boiler.

Determine location

1. Locate the vent/air terminations using the following guidelines:
2. The air piping must terminate in a down-turned 180-degree return bend as shown in Figure 63. Locate the air inlet pipe no further than 2 feet from the center of the vent pipe. This placement avoids recirculation of flue products into the combustion air stream.
3. The vent piping must terminate in an up-turned coupling as shown in Figure 63. The top of the coupling must be at least 1 foot above the air intake. The air inlet pipe and vent pipe can be located in any desired position on the roof, but must always be no further than 2 feet apart and with the vent termination at least 1 foot above the air intake.
4. You must consider the surroundings when terminating the vent and air:
   a. Position the vent termination where vapors will not damage nearby shrubs, plants or air conditioning equipment or be objectionable.
   b. The flue products will form a noticeable plume as they condense in cold air. Avoid areas where the plume could obstruct window views.
   c. Prevailing winds could cause freezing of condensate and water/ice buildup where flue products impinge on building surfaces or plants.
   d. Avoid possibility of accidental contact of flue products with people or pets.
   e. Do not locate the terminations where wind eddies could affect performance or cause recirculation, such as inside building corners, near adjacent buildings or surfaces, window wells, stairwells, alcoves, courtyards or other recessed areas.
   f. Do not terminate above any door or window. Condensate can freeze, causing ice formations.
   g. Locate or guard vent to prevent condensate damage to exterior finishes.

Figure 62 Maximum piping lengths for separate vent and air pipe vertical termination

Boiler Ultra–	Maximum Piping, 2" *		Maximum Piping, 3" *		Maximum Piping, 4" *	
	Feet	Elbows	Feet	Elbows	Feet	Elbows
80	30	1	100	1	Not allowed	
105	30	1	100	1		
155	Not allowed		100	1		
230	Not allowed		30	1	100	1
310	Not allowed		Not allowed		100	1

* Install reducers as necessary where connecting to the boiler vent and air connections.

For piping using more than 1 elbow, reduce maximum allowable length:
- 7 feet for each additional 4-inch elbow (90° or 45°)
- 7 feet for each additional 3-inch long radius elbow
- 16 feet for each 3-inch short radius elbow
- 7 feet for each 3-inch 45-degree elbow.
- 14 feet for the air termination return bend

Figure 63 Vertical termination — separate pipes

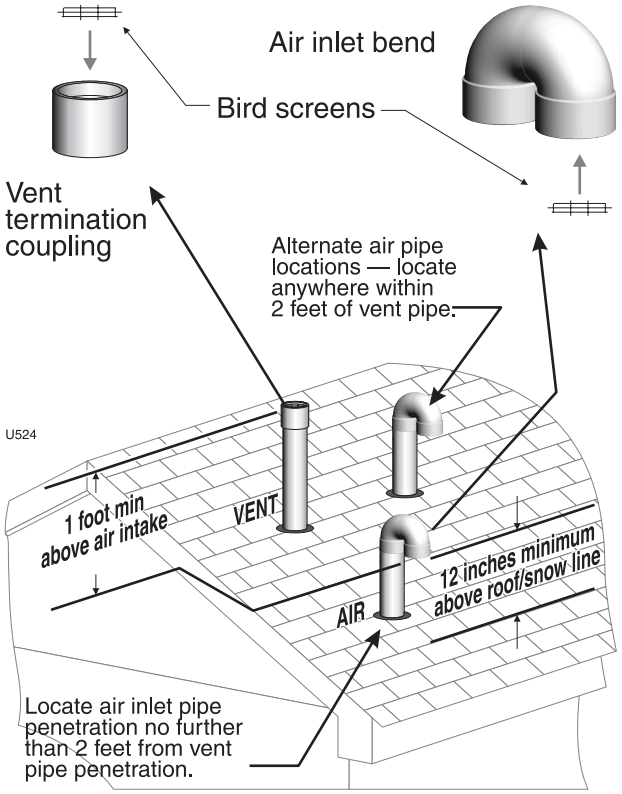

Vertical vent/air termination: *Separate pipes* (continued)

5. Maintain clearances to vent termination as given below:
   a. Vent must terminate:
      - At least 6 feet from adjacent walls.
      - No closer than 5 feet below roof overhang.
      - At least 7 feet above any public walkway.
      - At least 3 feet above any forced air intake within 10 feet.
      - No closer than 12 inches below or horizontally from any door or window or any other gravity air inlet.
   b. Air inlet must terminate at least 6 inches above the roof or snow line and at least 12 inches below the vent termination as shown in Figure 63, page 46.
   c. Do not terminate closer to 4 feet horizontally from any electric meter, gas meter, regulator, relief valve or other equipment. Never terminate above or below any of these within 4 feet horizontally.
6. Locate terminations so they are not likely to be damaged by foreign objects, such as stones or balls, or subject to buildup of leaves or sediment.
7. Do not connect any other appliance to the vent pipe or multiple boilers to a common vent pipe.

Prepare roof penetrations

1. Air pipe penetration:
   a. Cut a hole for the air pipe. Size the air pipe hole as close as desired to the air pipe outside diameter.
2. Vent pipe penetration:
   a. Cut a hole for the vent pipe. For either combustible or non-combustible construction, size the vent pipe hole at least 0.4" larger than the vent pipe diameter:
      - 4" hole for 3" PVC
      - 5" hole for 4" PVC
   b. Insert a galvanized metal thimble in the vent pipe hole.
3. Space the air and vent holes to provide the minimum spacings shown in Figure 63, page 46.
4. Follow all local codes for isolation of vent pipe when passing through floors, ceilings and roofs.
5. Provide flashing and sealing boots sized for the vent pipe and air pipe.

Termination and fittings

1. Prepare the vent termination coupling and the air termination elbow (Figure 63, page 46) by inserting the bird screens provided with the boiler. Bird screens are provided for either 3-inch (Ultra-80, -105 and -155) or 4-inch (Ultra-230 or -310) fittings.
   a. If using 3-inch piping for an Ultra-230, cut the 4-inch bird screen supplied by placing 3-inch fitting on screen and cutting around it as a template.
2. The air piping must terminate in a down-turned 180-degree return bend as shown in Figure 63, page 46. Locate the air inlet pipe no further than 2 feet from the center of the vent pipe. This placement avoids recirculation of flue products into the combustion air stream.

Figure 64 Termination location — separate pipes — terminations for multiple boilers

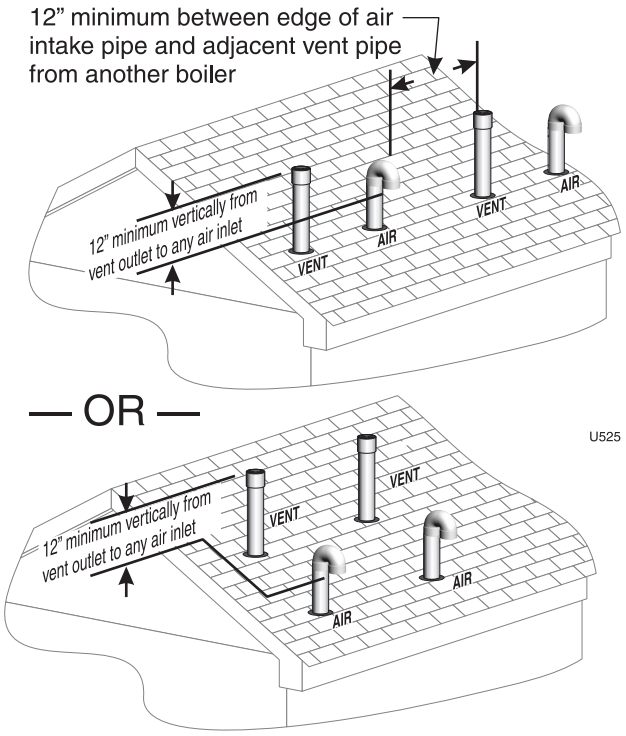

3. The vent piping must terminate in an up-turned coupling as shown in Figure 63, page 46. The top of the coupling must be at least 1 foot above the air intake. The air inlet pipe and vent pipe can be located in any desired position on the roof, but must always be no further than 2 feet apart and with the vent termination at least 1 foot above the air intake.
4. Maintain the required dimensions of the finished termination piping as shown in Figure 63, page 46.
5. Do not extend exposed vent pipe outside of building more than shown in this document. Condensate could freeze and block vent pipe.

Multiple vent/air terminations (Figure 64)

1. When terminating multiple Ultra boilers, terminate each vent/air connection as described in this section.

⚠WARNING Terminate all vent pipes at the same height and all air pipes at the same height to avoid possibility of severe personal injury, death or substantial property damage.

2. Place roof penetrations to obtain minimum clearance of 12 inches between edge of air intake elbow and adjacent vent pipe of another boiler for U. S. installations (see Figure 2). For Canadian installations, provide clearances required by CSA B149.1 or B149.2 Installation Code.
3. The air inlet of an Ultra boiler is part of a direct vent connection. It is not classified as a forced air intake with regard to spacing from adjacent boiler vents.

Install vent/air piping — boiler to termination

Complete termination preparation

1. Install vent and air terminations before proceeding. See previous pages for instructions.

Installing vent and air piping

1. For reference in the following see:
   a. Sidewall terminations: see Figure 66, page 49.
   b. Vertical terminations: see Figure 67, page 49.
2. Work from the boiler to vent or air termination. Do not exceed the lengths given in the previous pages for either the air or vent piping.
   a. As shown in the maximum length tables, the Ultra-80 or Ultra-105 may be installed with either 2-inch or 3-inch vent and air piping.
   b. As shown in the maximum length tables, the Ultra-230 may be installed with either 3-inch or 4-inch vent and air piping.
   c. You must install appropriate pipe reducers, where required, at both the boiler and at the termination assembly.
3. See Figure 65 for attaching vent and air pipes at the boiler.
4. Cut pipe to required lengths.
5. Deburr inside and outside of pipe ends.
6. Chamfer outside of each pipe end to ensure even cement distribution when joining.
7. Clean all pipe ends and fittings. Dry thoroughly.
8. Dry assemble entire vent or air piping to ensure proper fit before assembling any joint.
9. For each joint:
   a. Handle fittings and pipes carefully to prevent contamination of surfaces.
   b. Apply primer liberally to both joint surfaces — pipe end and fitting socket.
   c. While primer is still damp, lightly apply approved cement to both surfaces in a uniform coating.
   d. Apply a second coat to both surfaces. Avoid using too much cement on sockets to prevent cement buildup inside.
   e. With cement still wet, insert pipe into fitting, twisting ¼ turn. Make sure pipe is fully inserted.
   f. Wipe excess cement from joint. Check joint to be sure a smooth bead of cement shows around the entire joint.
10. Install pipe supports as shown in Figure 66, page 49 or Figure 67, page 49.
11. Slope vent and air piping continuously toward boiler, with at least 1/4 inch drop per foot of run. Do not allow sags at any point.
12. Maintain minimum clearance of 3⁄16 inch between vent pipe and any combustible wall or material.
13. Seal wall or floor penetration openings following local code requirements.

Figure 65 Boiler vent and air connections

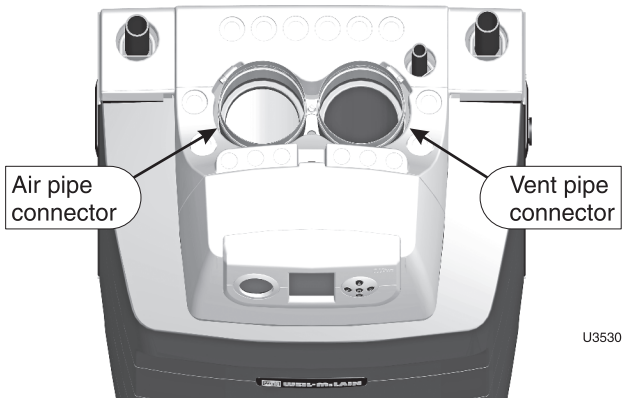

Inserting/securing vent or air pipe into boiler connectors

⚠WARNING AL294C vent pipe — If using AL294C stainless vent pipe, you must install a PVC-to-vent pipe adapter at the boiler vent connection (and at the termination if using the Weil-McLain plate or the concentric termination). Use only the adapter made by the vent pipe manufacturer.

1. PVC/ABS pipe — Clean and chamfer insertion end of pipe. Deburr inside of insertion end. Clean and deburr inside and outside of other end of pipe.

⚠WARNING The pipe end must be smooth and chamfered to prevent possible damage to sealing gasket in vent or air pipe adapter. Failure to comply could result in leakage, causing possible severe personal injury or death.

2. Inspect vent or air adapter (above) — verify no obstructions or foreign objects inside.
3. Loosen clamp screw.
4. Measure 3½ inches from end of pipe and make a mark with felt-tip pen.
5. Loosen adapter clamp screw.
6. Apply small amount of silicon grease to end of pipe to ease insertion.
7. Insert pipe into adapter.
8. Slide pipe down until the 3½-inch mark is reached.

⚠WARNING Do not apply excessive force or bend the adapter or flue/air pipe when inserting. The adapter or seal could be damaged.

9. Secure vent or air pipe by tightening the adapter clamp securely. Do not overtighten. The seal is accomplished with the internal gasket. The clamp is only to hold the pipe in place.

Install vent/air piping — boiler to terminations *(continued)*

Figure 66 Sidewall termination methods and installation requirements

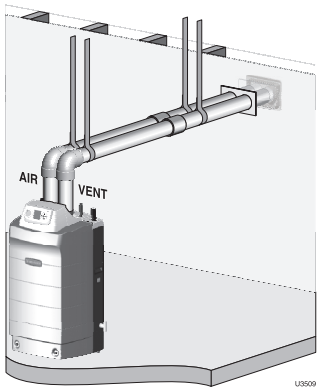

Weil-McLain sidewall termination plate

(install termination — page 33)

- Install pipe supports every 5 feet on both the horizontal and vertical runs.
- Install a hanger support within 6 inches of any upturn in the piping.
- The Weil-McLain plate termination must be installed before piping from the boiler to the termination.
- Slope horizontal piping downward toward the boiler at least 1/4 inch per foot.

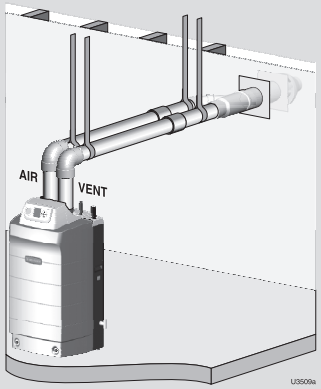

Weil-McLain 3" PVC concentric termination

(install termination — page 36)

- Install pipe supports every 5 feet on both the horizontal and vertical runs.
- Install a hanger support within 6 inches of any upturn in the piping.
- The Weil-McLain 3" PVC concentric termination assembly must be installed before piping from the boiler to the termination. Support the termination at the wall as shown in the termination instructions.
- Slope horizontal piping downward toward the boiler at least 1/4 inch per foot.
- Rotate the concentric termination Y-fitting about 30° to result in pipe centers the same as at the boiler.

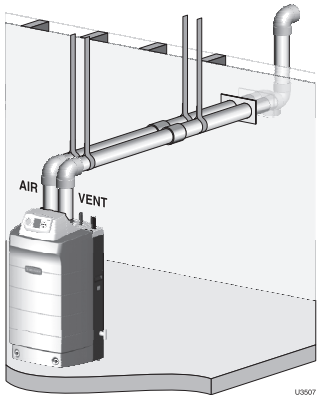

Sidewall termination with separate vent and air pipes

(install termination — page 39)

- Prepare wall penetrations before installing vent and air piping. Finish by attaching external pipe and fittings as shown in the termination instructions.
- Install pipe supports every 5 feet on both the horizontal and vertical runs.
- Install a hanger support within 6 inches of any upturn in the piping.
- Support vertical runs on the outside of the building with brackets as shown in the termination instructions.
- Slope horizontal piping downward toward the boiler at least 1/4 inch per foot.

Figure 67 Vertical termination methods and installation requirements

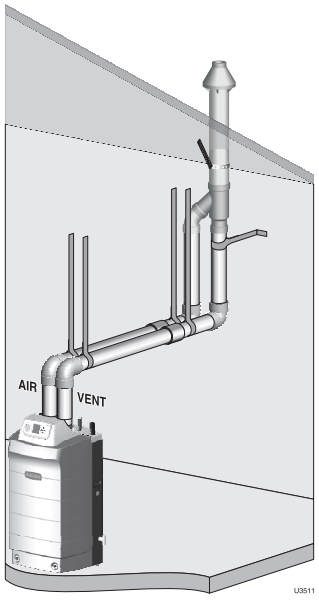

Weil-McLain 3" PVC concentric termination

(install termination — page 42)

- Install pipe supports every 5 feet on both the horizontal and vertical runs.
- Install a hanger support within 6 inches of any upturn in the piping.
- The Weil-McLain 3" PVC concentric termination assembly must be installed before piping from the boiler to the termination. Support the termination at the ceiling and above the roof as shown in the termination instructions.
- Slope horizontal piping downward toward the boiler at least 1/4 inch per foot.
- Use long-radius elbows for air piping when using 2" or 3" pipe to reduce pressure drop.
- Rotate the concentric termination Y-fitting about 30° to result in pipe centers the same as at the boiler.

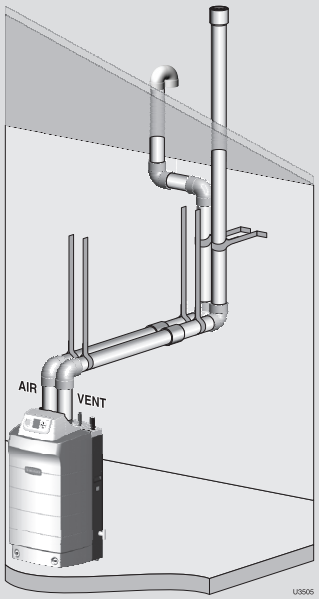

Vertical termination with separate vent and air pipes

(install termination — page 46)

- Prepare roof penetrations before installing vent and air piping. Finish by attaching termination fittings as shown in termination instructions.
- Install pipe supports every 5 feet on both the horizontal and vertical runs.
- Install a hanger support within 6 inches of any upturn in the piping.
- Slope horizontal piping downward toward the boiler at least 1/4 inch per foot.
- Air piping may be offset as shown at left so termination can be located as required in the installation instructions.
- Use long-radius elbows for air piping when using 2" or 3" pipe to reduce pressure drop.

Install condensate line

Prepare condensate fittings

1. Remove PVC fittings and gasket from the accessories bag.
2. Deburr and chamfer outside and inside of ½" x 1¼" PVC nipple to ensure even cement distribution when joining.
3. Clean nipple ends and all fittings. Dry thoroughly.
4. For each joint in the condensate line, apply the following. Assemble parts ONLY in the order given.
   a. Apply primer liberally to both joint surfaces — pipe end and fitting socket.
   b. While primer is still damp, lightly apply approved cement to both surfaces in a uniform coating.
   c. Apply a second coat of cement to both surfaces. Avoid using too much cement on sockets to prevent cement buildup inside.
   d. With cement still wet, insert pipe into fitting, twisting ¼ turn. Make sure pipe is fully inserted.
   e. Wipe excess cement from joint. Check joint to be sure a smooth bead of cement shows around the entire joint.
5. See Figure 68.
6. Assemble the ½" PVC nipple to the PVC reducing elbow as shown.
7. Allow joint to dry completely. Then slide gasket over nipple as shown.
8. Slide nipple through jacket condensate line hole to position as shown in Figure 69, page 50.
9. Cement the ½" tee to the protruding ½" nipple. Be sure both nipple and reducing elbow finish upright.

⚠CAUTION Firmly press the reducing elbow and the tee together while the cement sets to ensure the gasket is securely compressed. The gasket ensures the jacket enclosure is airtight at this location.

Connect condensate drain

1. Remove condensate trap line (or line sections) from bag.
2. Slide trap line onto flue outlet condensate connection and PVC reducing elbow as shown in Figure 71, page 51 and Figure 72, page 51. (Also see special assembly for Ultra-80 and -105 in step 4. below.)
3. Secure line with hose clamps.
4. Ultra-80 & -105 only — Screw ½-inch hose barb fitting into ½-inch tee and insert into the condensate line sections as shown in Figure 71, page 51. Slide the ¼-inch hose onto the hose barb and secure with hose clamp. (The upper end of the hose is factory-attached to the air inlet trap.)

Figure 68 Condensate trap assembly

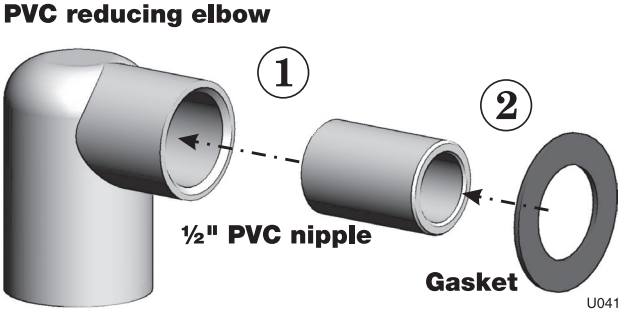

Figure 69 Condensate drain — Ultra-80 & -105

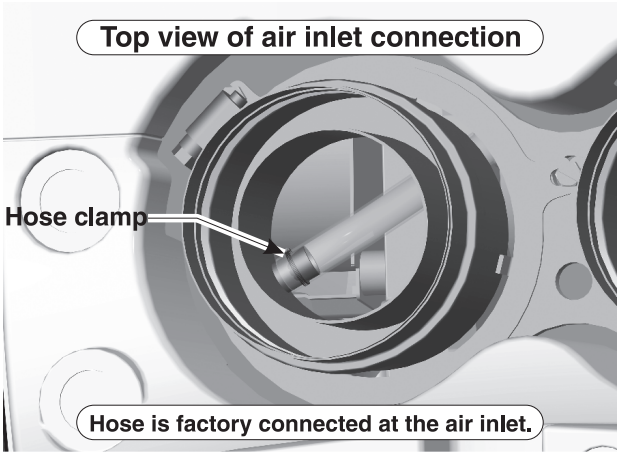

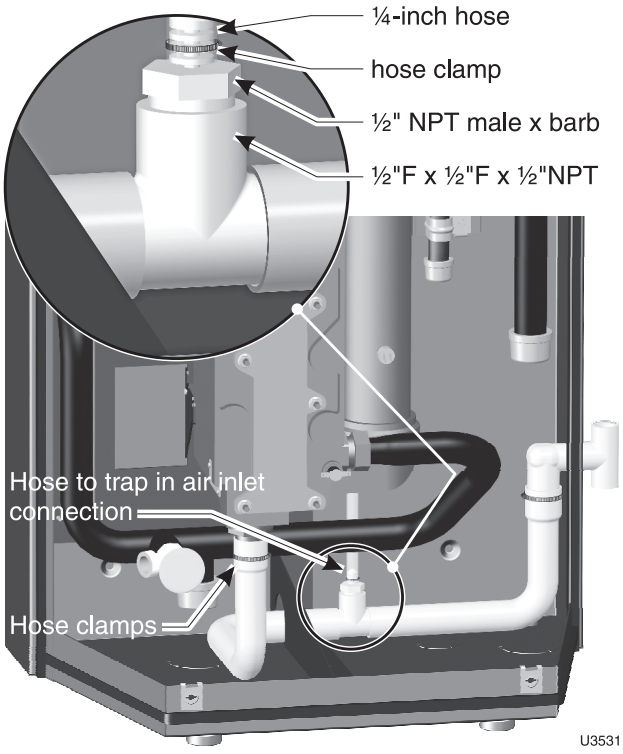

Install condensate line *(continued)*

1. Connect condensate drain tubing to the ½" PVC tee and run to floor drain or condensate pump (see Figure 73). Use ½" PVC or CPVC pipe; or 5/8" I.D. tubing.

NOTICE Use materials approved by the authority having jurisdiction. In the absence of other authority, PVC and CPVC pipe must comply with ASTM D1785, F441 or D2665. Cement and primer must comply with ASTM D2564 or F493. For Canada, use CSA or ULC certified PVC or CPVC pipe, fittings and cement.

2. Leave the top of the ½" tee OPEN. This is needed as a vacuum break.
3. When installing a condensate pump, select one approved for use with condensing boilers and furnaces. The pump should have an overflow switch to prevent property damage from condensate spillage. See Figure 70 for required flow capacity.
4. When sizing condensate pumps, make sure to include the total load of all Ultra boilers connected to it.

⚠CAUTION The condensate line must remain unobstructed, allowing free flow of condensate. If condensate is allowed to freeze in the line or if the line is obstructed in any other manor, condensate can exit from the boiler tee, resulting in potential water damage to property.

NOTICE Condensate from the Ultra boiler will be slightly acidic (typically with a pH from 3.2 to 4.5). Install a neutralizing filter if required by local codes. See Replacement parts section at the end of this manual for the Weil-McLain kit.

Figure 70 Suggested condensate pump capacity, GPH

Boiler	Minimum recommended condensate pump capacity, per boiler, GPH		
Ultra-80	2	Ultra-230	6
Ultra-105	3	Ultra-310	8
Ultra-155	4	—	—

Figure 71 Condensate drain — Ultra-155 & -230 (PVC tee installation shown applies to all models))

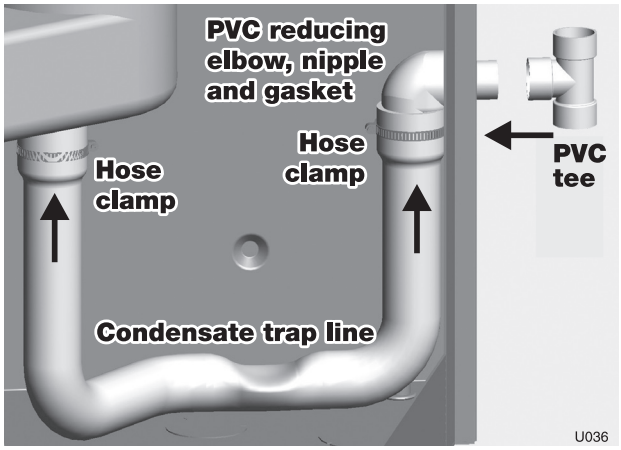

Figure 72 Condensate drain — Ultra-310

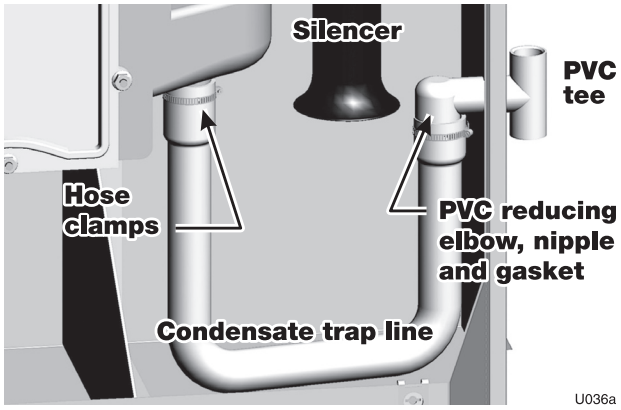

Figure 73 Condensate pump (by others), typical

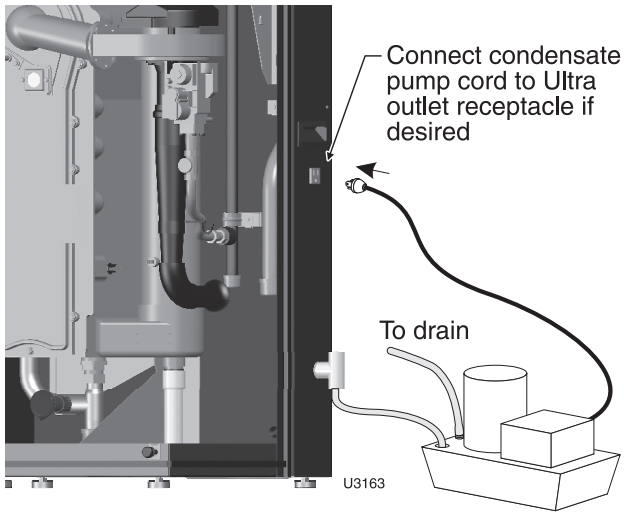

Gas piping

Connecting gas supply piping

1. Remove jacket front panel and refer to Figure 74 to pipe gas to boiler.
   a. Install ground joint union for servicing, when required.
   b. Install manual shutoff valve in gas supply piping outside boiler jacket when required by local codes or utility requirements.
   c. In Canada — When using manual main shutoff valve, it must be identified by the installer.
2. Wall-mounted boilers
   a. Refer to separate Ultra Boiler Wall-mounting instructions.
   b. Gas connection may enter from the bottom of boiler as explained in the Wall-mounting instructions.
3. Support piping with hangers, not by boiler or its accessories.
4. Purge all air from gas supply piping.
5. Before placing boiler in operation, check boiler and its gas connection for leaks.
   a. Close manual main shutoff valve during any pressure testing at less than 13" w.c.
   b. Disconnect boiler and gas valve from gas supply piping during any pressure testing greater than 13" w.c.

⚠WARNING Do not check for gas leaks with an open flame — use bubble test. Failure to use bubble test or check for gas leaks can cause severe personal injury, death or substantial property damage.

6. Use pipe dope compatible with propane gases. Apply sparingly only to male threads of pipe joints so that pipe dope does not block gas flow.

⚠WARNING Failure to apply pipe dope as detailed above can result in severe personal injury, death or substantial property damage.

⚠WARNING DO NOT adjust or attempt to measure gas valve outlet pressure. The gas valve is factory-set for the correct outlet pressure. This setting is suitable for natural gas and propane, requiring no field adjustment. Attempting to alter or measure the gas valve outlet pressure could result in damage to the valve, causing potential severe personal injury, death or substantial property damage.

⚠WARNING Ultra boilers are shipped ready to fire natural gas ONLY. (Exception: Ultra-80LP is propane-ready.) You must install the propane orifice if the boiler will be connected to propane. See page 9. Failure to comply could result in severe personal injury, death or substantial property damage.

⚠WARNING Use two wrenches when tightening gas piping at boiler, using one wrench to prevent the boiler gas line connection from turning. Failure to support the boiler gas connection pipe to prevent it from turning could damage gas line components.

Figure 74 Connect gas supply piping

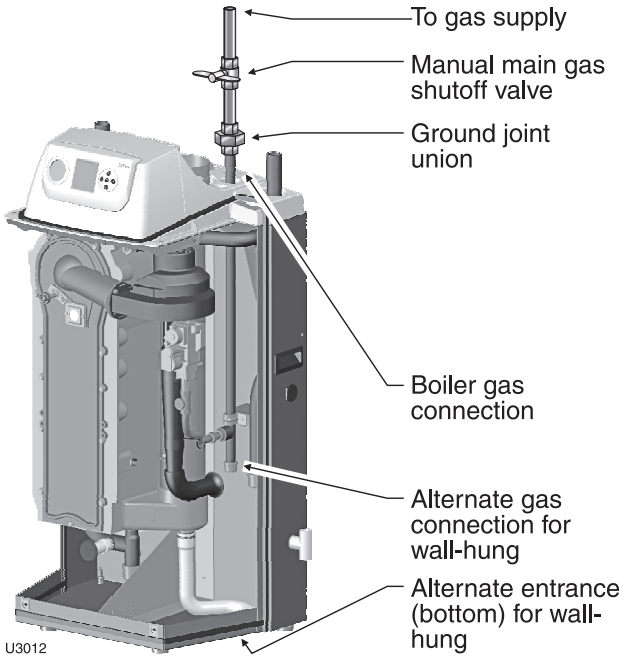

Manifolded gas supply lines

1. Construct gas header for multiple boilers using Figure 75, page 53 and the sizing tables below. Refer to the National Fuel Gas Code for other conditions.
2. Provide manual shutoff gas valve and ground joint union as shown in Figure 74 and Figure 75, page 53 for each boiler. When gas line enters from top of the boiler, the boiler internal gas piping provides a drip leg.
3. A ¾" NPT gas piping riser from header to boiler will be large enough for most jobs. Ensure the piping is large enough so that the minimum pressure at the boiler will be at least 5 inches water column with all connected appliances firing.

Gas piping *(continued)*

Natural Gas:

Pipe sizing for natural gas

1. Size gas piping from meter outlet to entrance of boiler in accordance with Figure 76 and Figure 77.
2. Use total input of all boilers. Divide total input in Btuh by 1,000 to obtain cubic feet per hour of natural gas.
   a. Pipe lengths in Figure 76 are equivalent length of straight pipe. Convert pipe fittings to equivalent lengths using data from Figure 77.
   b. Figure 76 is only for natural gas with specific gravity 0.60, with a pressure drop through the gas piping of 0.30" w.c.
   c. For additional gas pipe sizing information, refer to ANSI Z223.1 (or B149.1 or B149.2 for Canadian installations).

Natural gas supply pressure

1. Pressure required at gas valve inlet pressure port:
   a. Maximum: 13" w.c. with no flow (lockup) or with boiler on
   b. Minimum: 5" w.c. with gas flowing (verify during boiler startup, while boiler is at high fire)
2. Install 100% lockup gas pressure regulator in supply line if inlet pressure can exceed 13" w.c. at any time. Adjust lockup regulator for 13" w.c. maximum.

Propane Gas:

⚠WARNING You must follow the instructions, beginning on page 9, to operate the boiler on propane. Failure to comply could result in severe personal injury, death or substantial property damage.

Pipe sizing for propane gas

1. Contact gas supplier to size pipes, tanks and 100% lockup gas pressure regulator.

Propane supply pressure

1. Adjust propane supply regulator provided by gas supplier for 13" w.c. maximum pressure.
2. Pressure required at gas valve inlet pressure port:
   a. Maximum: 13" w.c. with no flow (lockup) or with boiler on
   • Minimum: 4" w.c. with gas flowing (verify during boiler startup, while boiler is at high fire).

Figure 75 Common gas line for multiple boilers

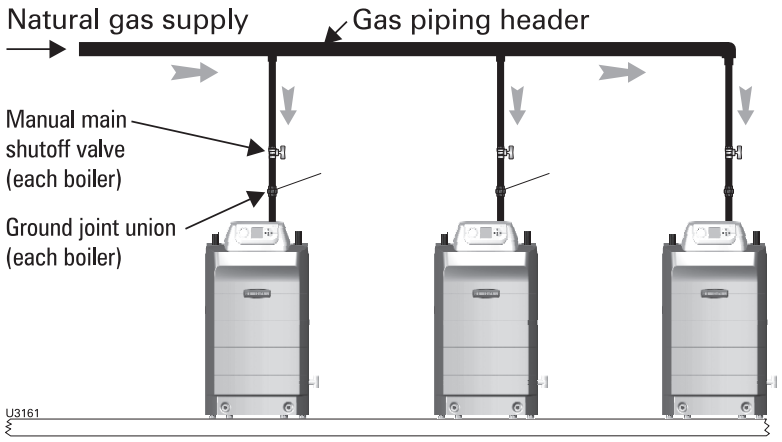

Figure 76 Pipe capacity for 0.60 specific gravity natural gas

Gas pipe total length, feet	Capacity (cubic feet per hour, 0.60 specific gravity)				
	1"	1¼"	1½"	2"	2½"
10	520	1050	1600	3050	4800
20	350	730	1100	2100	3300
30	285	590	890	1650	2700
40	245	500	760	1450	2300
50	215	440	670	1270	2000
75	175	360	545	1020	1650
100	150	305	460	870	1400
150	120	250	380	710	1130

Figure 77 Equivalent lengths of straight pipe for typical gas line fittings

Pipe size inches	Equivalent length, feet	
	90° Elbow	Tee
1	2.62	5.24
1¼	3.45	6.90
1½	4.02	8.04
2	5.17	10.3
2½	6.16	12.3

Field wiring (see Figure 78 & Figure 79)

WARNING **ELECTRICAL SHOCK HAZARD** — For your safety, turn off electrical power supply at service entrance panel before making any electrical connections to avoid possible electric shock hazard. Failure to do so can cause severe personal injury or death.

NOTICE Wiring must be N.E.C. Class 1. If original wiring as supplied with boiler must be replaced, use only type 105 °C wire or equivalent. Boiler must be electrically grounded as required by National Electrical Code ANSI/NFPA 70 – latest edition.

Installation must comply with:

1. National Electrical Code and any other national, state, provincial or local codes or regulations.
2. In Canada, CSA C22.1 Canadian Electrical Code Part 1, and any local codes.

Wiring — general

1. The U-Control provides plug-in, color-coded, non-interchangeable terminal strips for all field wiring. See the schematic diagram (Figure 78, page 55) & ladder diagram (Figure 79, page 56).
2. The U-Control provides programmable flexibility in system operation, allowing control of heat supply for up to three different heating systems. Read this manual thoroughly before connecting the wiring to ensure trouble-free start-up and operation.

Wiring — overview

You will need to make the following connections, some of which depend on your system and how the U-Control will be programmed. (***See this and following pages for more information.***)

❑ **Connect 120VAC power (minimum 15-amp source)**

❑ **Connect wiring for up to three circulators**

❑ **Connect external limits, if used**

- Two different circuits are available — The U-Control will require manual reset for one of these circuits. The U-Control will automatically reset after limit operation and re-closure for limits in the other circuit.

❑ **Connect thermostats and/or heat demand contacts**

- The U-Control can regulate the boiler for up to three different heating systems.

❑ **Connect remote operation input, if used**

- The U-Control will operate and modulate the boiler based on a 0–10 VDC control signal from a remote controller, when desired.

❑ **Connect the "additional heat demand" circuit to a second heating source, when used**

- The U-Control allows the boiler to act as the primary or secondary heat source when another heat source, such as a heat pump or another boiler is available.

❑ **Connect to remote alarm, when used**

❑ **Connect wiring for multiple boiler operation**

- The U-Control provides the flexibility for control of multiple Ultra boilers.
- You will need to program the boilers' U-Controls based on the interconnection method you choose.

❑ **Install system & outdoor sensors, when used**

- The boiler is shipped with an outdoor sensor, a system supply sensor and a system return sensor. The system supply sensor will be required for most space heating applications. The system return sensor must also be installed when using the system supply sensor. Use of the outdoor sensor is optional.

Line voltage power input

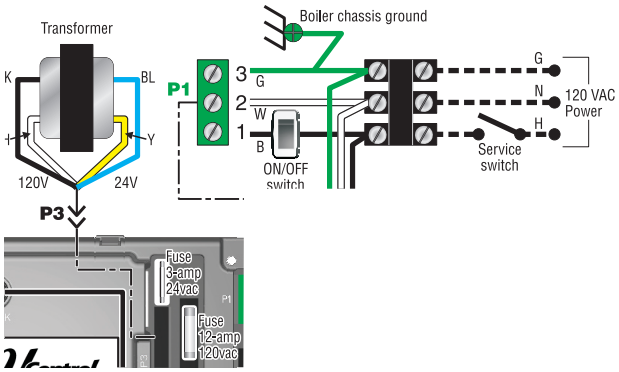

1. Provide and install a fused disconnect or service switch (15-ampere rated recommended) as required by applicable codes.
2. Connect minimum 15-ampere, 120 VAC power wiring to Ultra boiler line voltage terminal strip as shown in Figure 78, page 55 and above.

Wiring circulators

1. The U-Control provides for connection of up to three circulators, one of which must be the boiler circulator. In addition, you can connect a system circulator and a DHW circulator, for examples.

WARNING **The maximum allowable current for each circulator is 2.2 amps at 120 VAC**. For circulators with higher amp ratings, you must install a circulator relay or starter to provide line voltage to the circulator. For circulators rated over 2.2 amps, connect only the circulator relay or starter coil to the Ultra circulator terminals.

Continued after page 56

Field wiring (see Figure 78 & Figure 79) *(continued)*

Figure 78 Schematic wiring diagram — Ultra-80 through Ultra-310

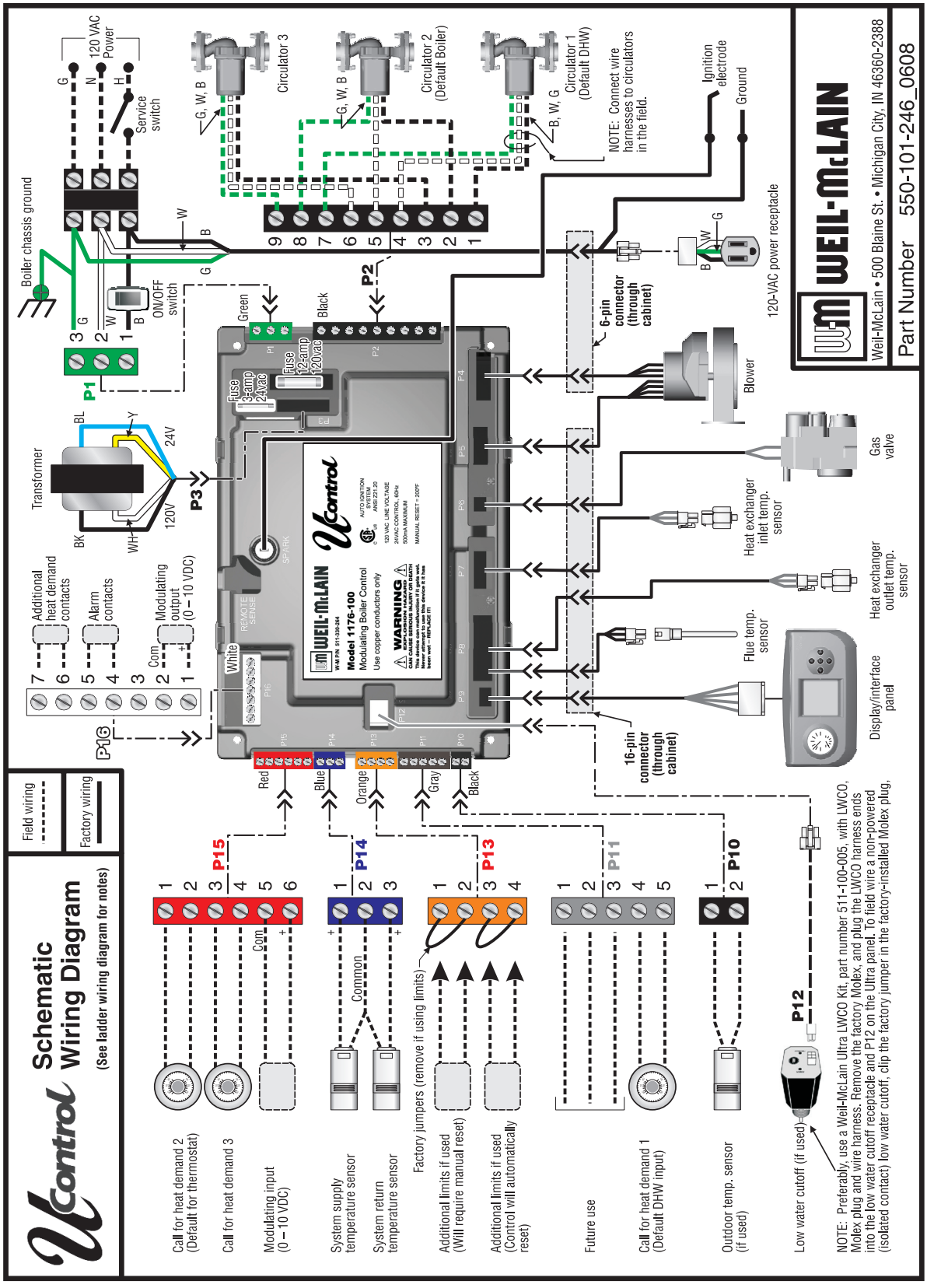

Field wiring (see Figure 78 & Figure 79) *(continued)*

Figure 79 Ladder wiring diagram — Ultra-80 through Ultra-310

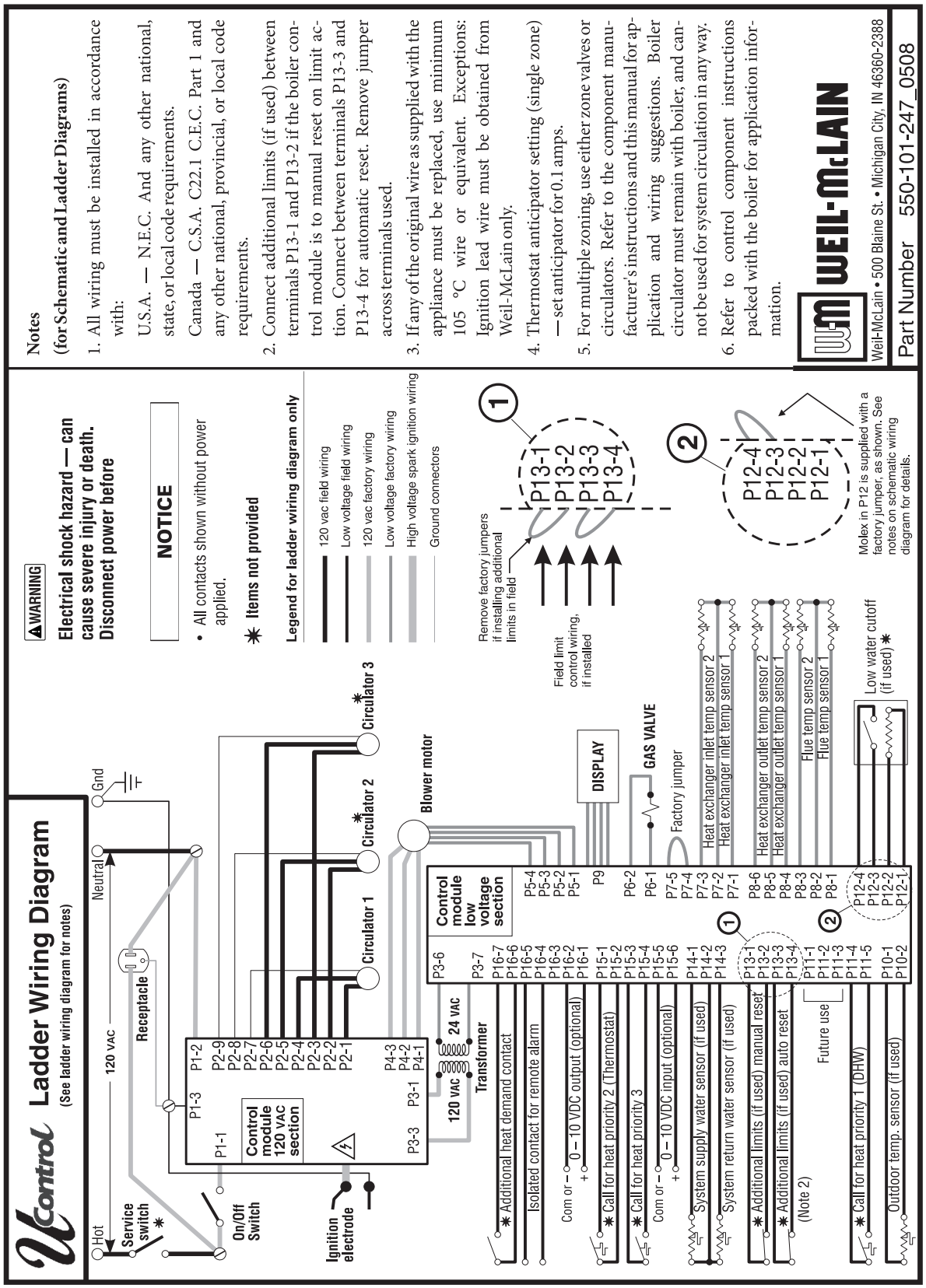

Field wiring (see Figure 78 & Figure 79) *(continued)*

2. You can connect any of the circulators you use to any of the three circulator activation terminals. The U-Control setup allows you to assign which circulators activate on a call for heat (this can be customized for each of the heating systems supplied by the boiler).

3. The U-Control factory **default** settings for DHW heating are configured for direct piping to the boiler, with Circulator 1 being the only circulator being activated during DHW heating. To use factory default settings, make sure to connect the DHW circulator to terminals 1, 4 and 7, as below:

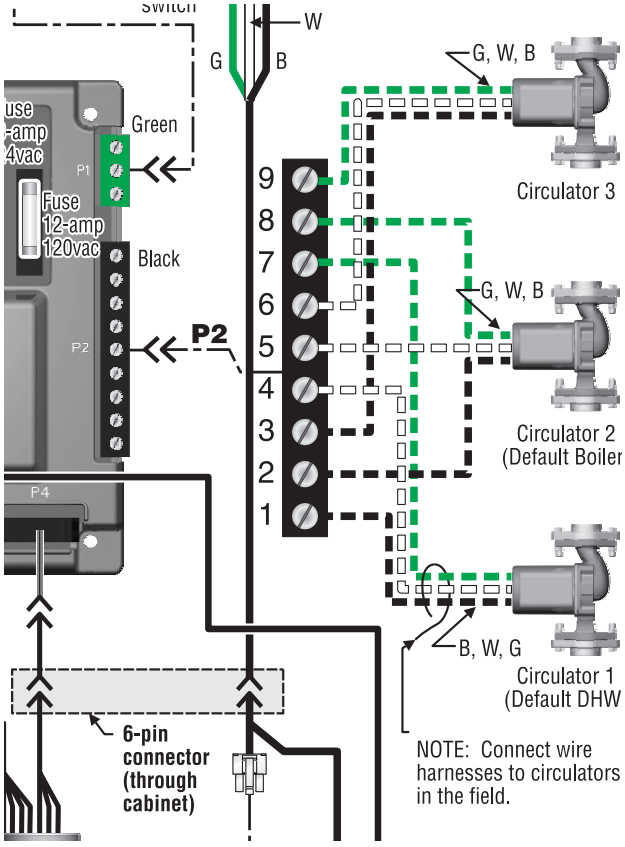

4. The factory **default** for space heating is designed for finned-tube baseboard, and set up to activate Circulator 2 and Circulator 3 on a call for heat. Connect the boiler circulator to terminals 2, 5 and 8 and the system circulator to terminals 3, 6 and 9 to use these default settings.

5. Make sure the U-Control is programmed to activate the system circulator when it is required (during space heating, for instance).

Thermostats & DHW tank temperature control connections

1. The U-Control allows operation by up to three different heating systems.

The U-Control module provides internal low water protection

1. The U-Control and internal sensors in the Ultra boiler provide both temperature control and low water protection (using temperature senors), as explained below:

NOTICE

The U-Control module uses temperature sensors to provide both high limit protection and modulating temperature control.

The U-Control module also provides **low water protection** by using a dual sensor to monitor the temperature of the heat exchanger. [The U-Control constantly monitors the sensor signals to ensure they are within 10 °F of one another. If the sensor difference exceeds 10 °F, the boiler is shutdown on manual reset lockout.] This method is accepted in many areas as meeting the requirement for a low water cut-off.

Some codes or jurisdictions may require additional external controls for high limit and/or low water cutoff protection. Follow the guidelines in this manual to install additional controls when required.

2. The factory default configuration is for "heat demand 1" to be DHW and "heat demand 2" to be space heating. For factory default operation:
   a. Connect the space heating thermostat to terminal strip P15, terminals 1 and 2 to use the default setup.
   b. Connect the DHW tank temperature control across terminal strip P11, terminals 4 and 5 to use the default setup.
3. Install thermostats on inside walls away from the influences of drafts, hot or cold water pipes, lighting fixtures, television, sun rays, or fireplaces.
4. Thermostat anticipator (if applicable):
   - If connected directly to the boiler, set anticipator for 0.1 amps.
   - If connected to relays or other devices, set to match total electrical power requirements of connected devices. See device manufacturers' specifications and the thermostat instructions for details.

Low water cut-offs

1. See the **NOTICE** on this page regarding internal low water protection provided by the U-Control.
2. When an external low water cut-off is installed, connect as shown in the U-Control wiring diagrams (Figure 78, page 55 & Figure 79, page 56).
3. When possible, use the Weil-McLain Ultra low water cut-off kit listed in the back of this manual. It includes a probe-type low water cut-off and provides a simple harness connection for the wiring.

Field wiring (see Figure 78 & Figure 79) *(continued)*

Additional limits

1. The U-Control allows connection of external limit controls, both for manual reset and for automatic reset operation of the U-Control.
2. **Manual reset of the U-Control on limit action** — Connect external limits across P13, terminals 1 and 2 if the U-Control is to require manual reset when a limit opens, even if the limit re-closes. (Remove the factory jumper when using these terminals.)

NOTICE The U-Control will lockout when a limit in its manual reset circuit opens. The U-Contol activates its alarm terminals and shuts the boiler down until an operator manually resets the U-Control (as explained in this manual). This reset function can be done by a homeowner or a service technician.

3. **Automatic reset of the U-Control on limit action** — Connect external limits across P13, terminals 3 and 4 if the U-Control is to reset automatically when the limit circuit closes after a limit condition. (Remove the factory jumper when using these terminals.)

Remote operation/modulation

1. The U-Control module provides terminals to input a remote 0–10 VDC operating signal. This can be provided by a separate controller if the boiler is configured as Type 4 (slave boiler mode).
2. Connect the 0–10 VDC signal positive terminal to P15 terminal 6, and the signal common to terminal 5.
3. When receiving a remote operating signal, the boiler starts when the signal exceeds 1.0 VDC (and shuts off if the signal drops below 0.5 VDC). The boiler remains at low fire until the signal exceeds 2.0 VDC. Between 2.0 and 10.0 VDC, the boiler firing rate increases with the signal value, reaching full input at 10.0 VDC.
4. The U-Control continues to monitor boiler temperatures, based on the values set up under Priority 1 operation. See the following section for details.

Additional heat demand option

1. The U-Control module can be set up to activate another heat source using its additional heat demand dry contracts (P16, terminals 6 and 7).
2. Connect these terminals to call for heat from the other heat source. (See the following section to program the boiler to activate the other source, either as the primary or secondary heat source.)

Alarm contacts

1. The U-Control's alarm dry contact (P16, terminals 4 and 5) closes when the boiler enters lockout.
2. Connect these terminals for remote alarm notification.

Multiple boiler wiring options

1. The U-Control can be programmed to sequence multiple boilers or operate/modulate in tandem from a 0–10 VDC source generated by the lead boiler or from a remote controller.
2. See the following section for recommended wiring.

Outdoor temperature sensor

1. The U-Control provides programmable options when using an outdoor temperature sensor. This sensor is supplied with the boiler, and can be used if desired (not required). See the following section for outdoor temperature options.
2. Mount the outdoor sensor on an exterior wall, shielded from direct sunlight or flow of heat or cooling from other sources.
3. Connect the sensor leads to P10, terminals 1 and 2, as shown in the wiring diagrams. Thermostat wire can be used to connect the sensor.

NOTICE The boiler is also shipped with two strap-on temperature sensors, intended for system supply and return.

System supply & return temperature sensors

1. The boiler is also shipped with two strap-on temperature sensors, intended for system supply and return. These sensors can be attached to piping up to 3-inch diameter. Thermostat wire can be used to connect these sensors.

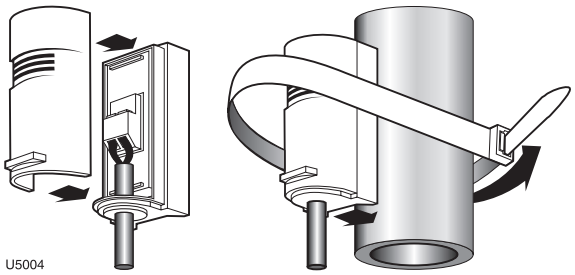

2. Use a system temperature sensor to regulate temperature in the system main piping. (Locate the supply sensor at least six pipe diameters, but no further than 3 feet, downstream from the boiler connection to the main to ensure adequate mixing.)
3. For multiple boiler applications, install a system supply temperature sensor and system return sensor wired to the master boiler.
4. The system return sensor allows the U-Control to monitor and display system return temperature.
5. The U-Control also compares the system return temperature with the system supply temperature. Should the return temperature ever exceed the supply temperature, the U-Control knows there is likely a sensor failure and will report this problem on the display. (The control will continue to operate the boiler, but the boiler will respond only to boiler supply and return temperature sensors, using the temperature limits programmed for the system.)

U-Control operation and setup

⚠WARNING **Temperature settings** — You must ensure that the U-Control is set for the proper water temperatures for the system. Excessive water temperature can cause significant property damage in some applications.

Multi-temperature systems — If the heating system includes circuits that require lower temperature water (radiant slab circuits, for example) as well as higher temperature circuits (DHW, finned tube baseboard, etc.), you must include mixing and temperature regulating devices to prevent over-temperature conditions in the lower temperature circuits. It is recommended to protect low-temperature circuits with limit controls that are wired to a U-Control external limit circuit. Failure to provide regulation can result in substantial property damage.

U-Control overview

The U-Control is fully programmable to meet system requirements, allowing supply water regulation for up to three different systems.

U-Control features include:

- ❑ Blower speed modulation to control the Ultra boiler's firing rate.
- ❑ Advanced PID response to anticipate system needs based on response to heat input.
- ❑ Graphic and robust text display for ease of operation monitoring and troubleshooting.
- ❑ Preset operating parameters for typical heating systems (finned tube baseboard, radiant floor, DHW, and others), including target temperatures, reset curves and circulator assignments.
- ❑ Control of up to three circulators (boiler circulator plus two others), assignable for each of the three possible inputs.
- ❑ Programmable priority assignments for the heat inputs.
- ❑ Integral outdoor reset option, with reset curves matched to the system type selected.
- ❑ Multiple boiler/heat source sequencing or modulation.
- ❑ Built-in 0–10 VDC signal generator to allow parallel modulation of multiple boilers; also capable of accepting 0–10 VDC input.
- ❑ Dual sensors for boiler outlet temperature and flue temperature, providing redundant protection.
- ❑ Integral low water protection (by monitoring boiler heat exchanger temperature).
- ❑ Boiler is shipped with an outdoor sensor and strap-on system supply and return sensors.

Sequence of operation

1. Figure 80 is a summary of the operating sequence for the U-Control.
2. The symbols shown appear in the display as the U-Control cycles the boiler.
3. The wrench symbol appears when a scheduled maintenance date arrives. This informs the homeowner to call the contractor for service.
4. The exclamation mark symbol appears when a problem has been detected.

Figure 80 U-Control sequence of operation

Display	Control action *(also see Figure 81, page 60)*
POWER UP	• Check the boiler model listed on the power-up screen. If it is not correct, turn off the boiler. See Figure 85, page 64 to change setting. • When power is turned on, the screen lists sensors that are detected. If any sensor is not listed, make sure it is connected correctly. Turn off power and restart.
Standby	• Standby — no calls for heat • Toggles through no dots, 1 dot, 2 dots, then 3 dots while in standby (wrench symbol will show instead if maintenance is needed)
Blower on	• Call for heat detected • Display on with BLUE light (space heating) or PURPLE light (DHW) • Start min/max on timers if more than one system is calling — highest priority starts first • Start circulators for this priority setup • Calculate target temp — If sensor temp is below target temp, begin firing sequence • Blower to ignition speed for prepurge • ***Multiple boilers/heat sources only*** — Start additional-heat timer — type 1 boiler starts immediately; type 2 activates other heat source immediately, but doesn't start unless the timer times out; type 3 (master boiler) starts immediately and sends 0–10 VDC signal to others after timer times out; type 4 receives signal from master boiler and starts immediately (and starts timer for the next boiler, if programmed)
Ignition on	• After prepurge times out, begin ignition cycle • Activate gas valve and ignition spark • Continue ignition spark for ignition period • Turn off spark and use electrode to check for flame signal
Space heating	• Flame detected • Hold boiler at low fire for 1 minute • Release boiler to modulation • NOTE: If flame is not detected, the gas valve is turned off, blower turns on (postpurge), and control starts cycle again. After 5 failures, the control waits 60 minutes, then tries again. • If priority timer times out, switch to next priority and start priority timer • If demand satisfied, go to postpurge
DHW heating	• Flame detected • Release boiler to modulation immediately • NOTE: If flame is not detected, the gas valve is turned off, blower turns on (postpurge), and control starts cycle again. After 5 failures, the control waits 60 minutes, then tries again. • If priority timer times out, switch to next priority and start priority timer • If demand satisfied, go to postpurge
Blower on	• Demand satisfied (temperature reaches target temperature or limit setting) • Gas valve off • Blower to ignition speed for postpurge • Return to standby after purge
Maintenance	• Display turns RED, toggling between graphic screen and maintenance screen (occurs when maintenance schedule timer times out) • Will show during standby only
Error/fault	• Display turns RED due to error or limit event • Flashing display means lockout condition — display toggles between three screens as in Figure 95, page 86.

U-Control operation and setup *(continued)*

Figure 81 U-Control display and navigation

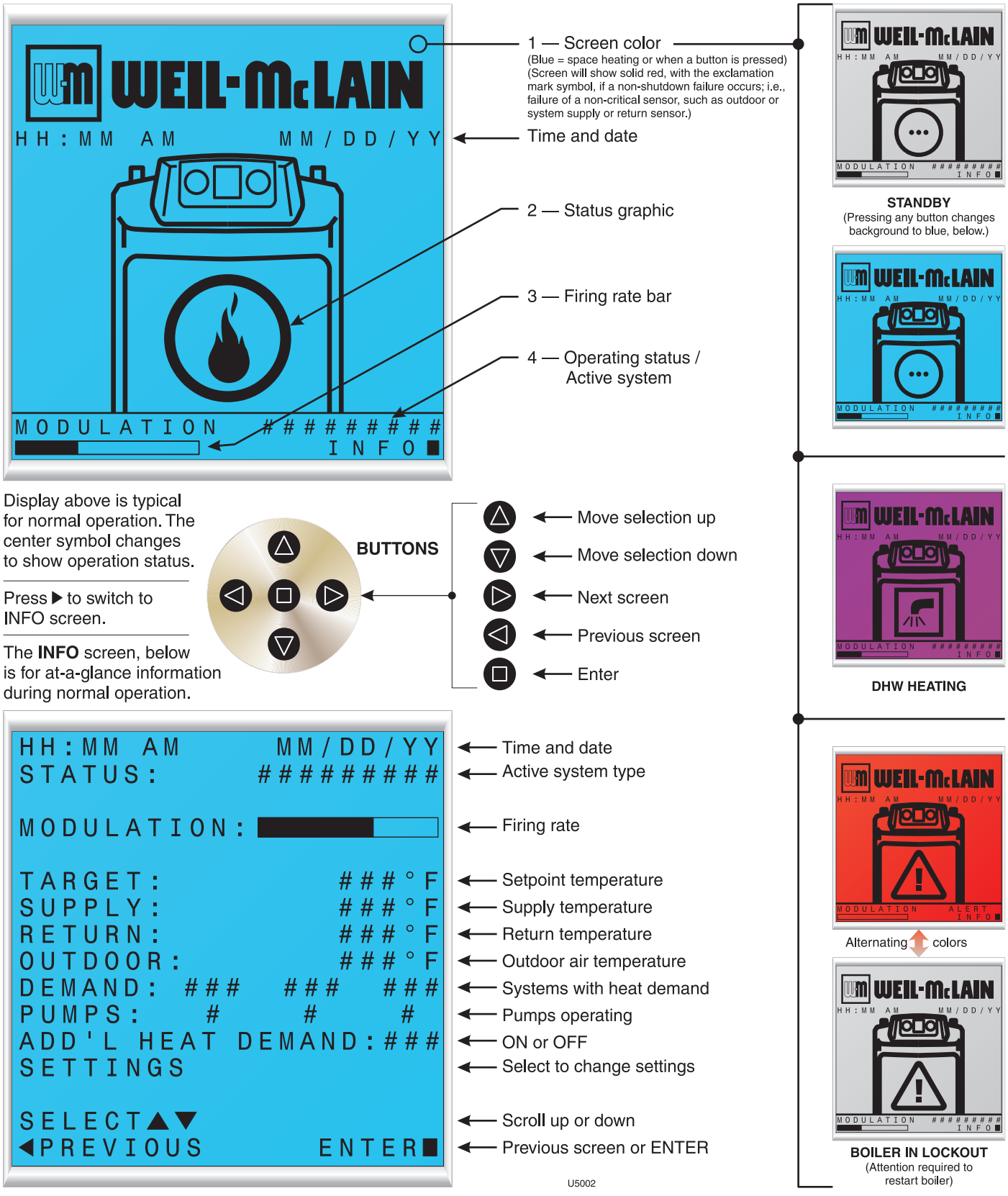

U-Control operation and setup *(continued)*

⚠WARNING **Low-temperature systems** (radiant slab, etc.) — **DO NOT** use the Ultra boiler control as the only means of water temperature regulation for low-temperature systems if higher-temperature systems are also supplied.

EXPRESS SETUP — using default settings

1. The U-Control is factory programmed to supply a DHW circuit (control priority 1) and finned tube baseboard space heating (control priority 2). Control priority 3 is also available, and preset to run all three circulators if desired.

Figure 82 Factory default settings

Priority	For	Target temperature	Circulators enabled
1	DHW	190°F	#1 Only
2	Finned tube BB	180°F fixed (if no outdoor sensor) or 180°F at 0°F outside / 130°F at 70°F outside	#1 and #2
3	Space heating	180°F fixed (if no outdoor sensor) or 180°F at 0°F outside / 130°F at 70°F outside	#1, #2 and #3

2. You can use the factory default settings for most systems supplying space heating with finned-tube baseboard with or without a DHW tank, provided:
   a. A DHW tank, if used, must be piped directly to the boiler, as in the piping shown in Figure 15, page 17 or Figure 17, page 19. If the DHW tank is a separate zone off of the system main, or if it is piped as in Figure 16, page 18, you will need to enable additional circulators for DHW operation. The U-Control is factory programmed to operate only the DHW circulator during DHW heating.
   b. The heat emitters in the system must be finned tube baseboard only. Other heat emitters require changes in the U-Control setup.
3. To use the factory default settings:
   a. Wire the DHW tank aquastat to the U-Control "heat demand 1" input, terminals P11 #4 and #5.
   b. Wire the space heating thermostat (or zone controller or zone valve end switches) across the U-Control "heat demand 2" input, terminals P15 #1 and #2.
   c. Attach a sensor (supplied with boiler) to the system supply pipe and wire to terminals P14 #1 and #2.
   d. Attach a sensor (supplied with boiler) to the system return pipe and wire to terminals P14 #2 and #3.
   e. If you want to use outdoor reset for the space heating circuits, install the outdoor temperature sensor (supplied with boiler) and wire to terminals P10 #1 and #2.
   f. Wire the boiler circulator (supplied with boiler) as circulator 2, following instructions on page 54.
   g. Wire the DHW circulator (supplied by installer) as circulator 1, following instructions on Connect the boiler circulator (supplied with boiler) as circulator 2, following instructions on page 54.
   h. Wire the system circulator (supplied by installer) as circulator 3, following the instructions on page 54.

ADVANCED SETUP – OVERVIEW

1. Access contractor menus by pressing and holding the UP and DOWN arrow keys for 5 seconds.
2. The contractor screen will show:
   a. BOILER SETTINGS
   b. SYSTEM SETTINGS
   c. DIAGNOSTICS
   d. MAINTENANCE INFO
   e. SET DATE AND TIME
3. Navigate through the menus as shown in Figure 85, page 64. For a description of each of the menu options, see Figure 86, page 66.
4. You will need to adjust settings as required for the systems supplied by the boiler and connect the wiring accordingly.

ADVANCED SETUP – BOILER SETTINGS

BOILER MODEL

⚠WARNING Check the **boiler model** against the model listed on the boiler's rating plate. Change the selection to the correct model if not. Also verify the model number on the U-Control display at power-up. Failure to correct could result in severe personal injury, death or substantial property damage.

HIGH ALTITUDE

⚠WARNING If the boiler is installed at an altitude above 5,500 feet, select YES for high altitude. The U-Control will automatically adjust firing rates (blower speeds) to compensate for altitude.

WWSD

1. WWSD stands for "warm weather shutdown." It means the boiler will not be allowed to fire if the outside temperature is greater than the WWSD setting.
2. When the boiler is kept off because the outside temperature is above WWSD, the graphic display will show "WWSD," and the boiler will remain in standby until the outside temperature drops below WWSD temperature.
3. WWSD does not apply to DHW systems.
4. The outdoor sensor must be installed to use this function.

ADJUST OUTDOOR

1. Use this setting to adjust the outdoor sensor temperature to account for solar or other effects that would cause the sensor to read incorrectly.

ADDITIONAL HEAT DEMAND

1. This setting is for multiple boilers or multiple heating sources (an Ultra boiler collaborating with a heat pump or a different boiler, for examples).
2. For Type 4 boilers, this function only applies to the Priority 1 system.

U-Control operation and setup *(continued)*

3. OFF — Function disabled.
4. Type 1 — This means the Ultra boiler is the primary heat source.
   a. When the Ultra boiler receives a call for heat, it begins its startup sequence and also starts a delay timer (set as ADD'L HEAT DEMAND TIME).
   b. When the delay timing is reached, the U-Control closes the the "Additional heat demand contact," terminals P16 #6 and #7. Use this contact to start the next heat source.
   c. If the next heat source is an Ultra boiler, connect this contact to the boiler's "heat demand 1" terminals (P11 #4 and #5). Program the second boiler's delay timer to start a third boiler the same way, and so on to sequentially fire multiple boilers.
5. Type 2 — This means the boiler is the secondary heat source.
   a. When the U-Control receives a call for heat, it immediately activates the "Additional heat demand contact," terminals P16 #6 and #7. This contact is used to start the next heat source immediately.
   b. When the delay timing is reached, the Ultra boiler begins its startup sequence and continues to heat until the demand is satisfied.
   c. Type 2 assignment would generally only be used if the other heat source is a different boiler or a heat pump, for example.
6. Type 3 — This assigns the boiler as the MASTER boiler in a multiple boiler system.
   a. This MASTER boiler must have system supply and return sensors mounted on the system supply and return pipes and wired to the boiler.
   b. When the U-Control receives a call for heat, it begins its heating sequence and starts the additional heat demand delay timer.
   c. When the delay timing is reached, the U-Control sends a 0–10 VDC proportional signal out its 0–10 VDC output terminals, P16 #1 and #2.
   d. Connect these output terminals to the SLAVE boilers' 0–10 VDC input terminals, P15 #5 and #6. The slave boilers will startup and modulate based on the signal strength. The slave boilers must be set up as Type 4 (see below). They do not need their additional heat timers to be setup.
   e. An alternate method is to daisy chain the other boilers. That is, connect the output of each to the input of the next. Each of these boilers would be set up as a Type 4 (see below), and each needs its additional heat timer set for the desired delay between boilers.
7. Type 4 — This assigns the boiler as a SLAVE boiler in a multiple boiler system.
   a. The boiler can be wired and setup to run in parallel with the other SLAVE boilers as in 6c, above. Or they can be set up for sequential operation following 6d, above.
   b. When the boiler receives a 0–10 VDC input on terminals P15 #5 and #6, it starts up and modulates firing rate according to the signal.
   c. If wired and setup per 6d above, it also starts its additional heat delay timer immediately. When the delay timing is reached, the U-Control sends out a 0–10 VDC signal (on terminals P16 #1 and #2) for the next boiler.
   d. The boiler uses the settings for Priority 1 while receiving the 0–10 VDC signal.

ADVANCED SETUP – PRIORITY 1, 2, 3

1. Priority 1, 2 and 3 refer to the three possible heating inputs that can be handled by the U-Control.
2. Select the priority level desired for the application. Priority 1 is usually assigned to domestic water heating, because of the need for quick response. Priority 2 and 3 usually used for space heating circuits.
3. Each of the three inputs has its own set of operating parameters, programmed using the menus shown in Figure 85, page 64.
4. The inputs to the U-Control are:
   a. Priority 1 — P11 #4 and #5, "heat demand 1"
   b. Priority 2 — P15 #1 and #2, "heat demand 2"
   c. Priority 3 — P15 #3 and #4, "heat demand 3"

ADVANCED SETUP – SYSTEM TYPE

1. For each priority being used, select the appropriate system type. See Figure 84 for system options and preset temperatures.
2. The temperature presets are chosen based on normal best setting for these systems. The temperature values can be changed, if desired, under "TEMPERATURES."

ADVANCED SETUP – TEMPERATURES

1. Setup desired temperatures for each of the priorities used.
2. For an explanation of the target temperatures and associated outdoor temperatures, see Figure 83.
   a. Outdoor temp for max target means the outdoor temperature at which the target temperature reaches its maximum value. In the example of Figure 83, this occurs at 25 °F outside.
   b. Outdoor temp for min target means the outdoor temperature at which the target temperature reaches its minimum. In the example of Figure 83, this occurs at 70 °F.
   c. Note that the reset lines are curved. The shape of this curve is matched (or characterized) to the response of the system type chosen to ensure the most effective reset operation.

U-Control operation and setup *(continued)*

Figure 84 U-Control system types and preset parameters

System type	Display		Preset temperatures				Note
	8-character	3-char	Max Target Temp	Outdoor Temp for Max Target	Min Target Temp	Outdoor Temp for Min Target	
Fan-coil	FAN-COIL	FCL	190	0	140	70	
Finned tube baseboard	FIN BASE	FTB	180	0	130	70	
Cast iron baseboard	IRN BASE	CIB	180	0	120	70	
Cast iron radiators	RADIATOR	CIR	180	0	120	70	
Radiant – slab on grade	RAD SLAB	RSG	120	0	80	70	
Radiant – thin slab	RAD SLAB	RTS	140	0	80	70	
Radiant – below floor (staple up)	RADFLOOR	RSU	160	0	90	70	
Radiant – above floor (sleeper system)	RADFLOOR	RAF	140	0	90	70	
Custom	CUSTOM	CUS	190	0	70	70	• Does not pass along Add'l Heat Demand
DHW – system	DOMESTIC	DHW	190	DHW heating ignores outdoor reset and warm weather shutdown			• U-Control modulates to system temperature sensors.
DHW – direct	DOMESTIC	DHW	190				• U-Control modulates to boiler temperature sensors. • Does not pass along Add'l Heat Demand

Figure 83 Typical outdoor reset curves

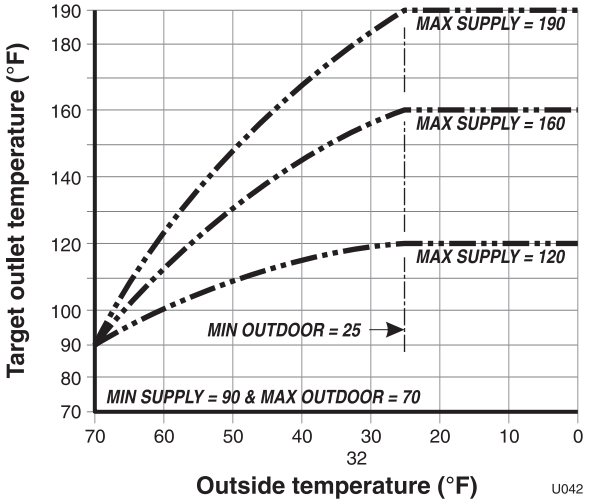

3. **Modulate on differential** — The temperature must drop this many degrees below target temperature for the boiler to come on.
4. **Modulate off differential** — While the boiler is firing, as the temperature increases above the target temperature, the boiler firing rate is reduced. At this many degrees above the target temperature, the boiler shuts down.

ADVANCED SETUP – CIRCULATOR EXERCISING

1. For each circulator, select whether you want the U-Control to automatically start the circulator and run for 10 seconds for each 72-hour period of inactivity.

ADVANCED SETUP – FREEZE PROTECTION CIRCULATORS

1. This function automatically fires the boiler at low fire and starts the circulators chosen if the heat exchanger sensor detects a temperature less than 40 °F. The circulators turn off when the temperature rises above 45 °F.

ADVANCED SETUP – MAINTENANCE INFO

1. Use this section to enter contractor's information and to enter an automatic notice for maintenance (default is 12 months). Because this shows on the display, it is an automatic means of notifying the homeowner of need for scheduled maintenance by the technician. Update the screen reminder to reset for the next maintenance date.

U-Control operation and setup *(continued)*

Figure 85 U-Control menus *(press and hold the UP and DOWN arrow keys for 5 seconds to enter contractor menus)*

Menus	Next screen	Next screen	Next screen	Next screen
Follow information at the bottom of each screen to navigate to next/previous screen or enter/save data				
BOILER SETTINGS	BOILER MODEL #####	80 105 155 230 310	**⚠WARNING** **Carefully verify that the boiler model number on the display now agrees with the boiler rating plate. Setting these incorrectly could result in severe personal injury, death or substantial property damage.**	
	HIGH ALTITUDE ###	NO YES		
	WWSD SETTING ### °F ADJUST OUTDOOR ### °F	### ###		
	ADD'L HEAT DEMAND TYPE: ###########	OFF TYPE 1 – ULTRA = PRIMARY HEAT SOURCE TYPE 2 – ULTRA = BACKUP HEAT SOURCE TYPE 3 – ULTRA = MASTER (0–10V OUTPUT) TYPE 4 – ULTRA = SLAVE (0–10V INPUT)		
	ADD'L HEAT DEMAND TIME: ### MINUTES	## MINUTES		
SYSTEM SETTINGS	BOILER PRIORITY 1	SYSTEM TYPE: ###	OFF FAN COIL FINNED TUBE BASEBOARD CAST IRON BASEBOARD CAST IRON RADIATOR RADIANT – SLAB ON GRADE RADIANT – THIN SLAB RADIANT – ABOVE FLOOR CUSTOM DHW – DIRECT DHW – SYSTEM	
		TEMPERATURES	MAX SUPPLY: ### °F MIN SUPPLY: ### °F MAX OUTDOOR: ### °F MIN OUTDOOR: ### °F MODULATE ON DIFF: ### °F MODULATE OFF DIFF:### °F	*MIN SUPPLY, MAX OUTDOOR AND MIN OUTDOOR are not shown for DHW types*
		TIMES	MAX ON TIME: ### MIN MIN ON TIME: ### MIN BOOST INTERVAL: ### MIN POST PUMP TIME: ### MIN	*not on Priority 3* *not on Priority 1*
		CIRCULATORS: # # #	CIRCULATOR 1: ### CIRCULATOR 2: ### CIRCULATOR 3: ###	ON/OFF ON/OFF ON/OFF
		MAXIMUM RATE: ___% MINIMUM RATE: ___%	### % ### %	
	BOILER PRIORITY 2 BOILER PRIORITY 3	SAME MENUS AS FOR PRIORITY 1 SAME MENUS AS FOR PRIORITY 1		
	CIRCULATOR EXERCISING	CIRCULATOR 1: ### CIRCULATOR 2: ### CIRCULATOR 3: ###	ON/OFF ON/OFF ON/OFF	
	FREEZE PROTECT CIRCS	CIRCULATOR 1: ### CIRCULATOR 2: ### CIRCULATOR 3: ###	ON/OFF ON/OFF ON/OFF	
MAINTENANCE INFO	NAME PHONE MODEL CP# INSTALLED LAST DATE NEXT DATE INTERVAL SETTINGS RESET REMINDER	################ ###-###-#### ULTRA ##### ########## DD/MM/YY DD/MM/YY DD/MM/YY ## MONTHS PRESS ENTER TO RESET		

U-Control operation and setup *(continued)*

Figure 85 U-Control menus, continued *(press and hold the UP and DOWN arrow keys for 5 seconds to enter contractor menus)*

Menus	Next screen	Next screen	Next screen	Next screen
Follow information at the bottom of each screen to navigate to next/previous screen or enter/save data				
SET DATE AND TIME	SET HR/MIN/DAY/MN/YR			
DIAGNOSTICS	TEMPERATURES	STATUS: ########## SYSTEM SUPPLY: ###°F SYSTEM RETURN: ###°F BOILER OUT1: ###°F BOILER OUT2: ###°F BOILER IN1: ###°F FLUE 1: ###°F FLUE 2: ###°F OUTDOOR: ###°F		
	INPUTS	STATUS: ########## PRIORITY 1: ### PRIORITY 2: ### PRIORITY 3: ### ANALOG IN: #### MANUAL LIMIT: ###### AUTO LIMIT: ###### LOW WTR CUTOFF: ###### BLOWER TACH: ####RPM FLAME SIGNAL: ###		
	OUTPUTS	STATUS: ########## GAS VALVE: ### CIRCULATOR 1: ### CIRCULATOR 2: ### CIRCULATOR 3: ### BLOWER SIGNAL: ###% ADD'L HEAT DEMAND: ### ALARM: ### ANALOG OUT: #### CONTROL FAULT ### IGNITION RETRIES ###		
	ERRORS	MANUAL RESET CNT ###		
		AUTO RESET CNT ###		
		LOCKOUT HISTORY 1	LOCKOUT HISTORY # HH:MM AM MM/DD/YY STATUS: ########## MANUAL RESET AUTO RESET INPUTS OUTPUTS TEMPERATURES	LIST OF LOCKOUTS LIST OF LOCKOUTS INPUT STATUS OUTPUT STATUS TEMPERATURES
		LOCKOUT HISTORY 2 LOCKOUT HISTORY 3	. . . SAME AS HISTORY 1 . . . SAME AS HISTORY 1	
	SOFTWARE VERSIONS	DISPLAY V#.## MAIN MICRO V#.## SECOND MICRO V#.##		
	MANUAL TEST MODE	STATUS: ########## TARGET: ###°F MODULATION: ###°F SYSTEM SUPPLY: ###°F SYSTEM RETURN: ###°F BOILER OUT: ###°F BOILER IN: ###°F FLAME SIGNAL: ### BLOWER SIGNAL: ###% BLOWER TACH: ####RPM FORCE RATE AUTO		
	MANUAL RESET	PRESS ENTER TO RESET THE FOLLOWING ERROR (SCREEN SHOWS A LIST OF ERRORS)		

U-Control operation and setup *(continued)*

Figure 86 U-Control setup options (see Figure 85, page 64 for location in menu sequence)

Menu/Item	Units	Low Value	High Value	Default	Comment
Boiler Settings					
Boiler Model	80, 105, 155, 230, 310			factory	**THIS MUST BE SET CORRECTLY FOR SAFE OPERATION**. Adjusts blower speeds and flame sense (Display will show "HA" after the model number if high altitude has been selected, below.)
High Altitude	yes or no			no	Adjusts ignition and low fire fan speed (for altitudes above 5, 500 feet only)
WWSD Temp	°F	Off, 50	100	70	Boiler will not respond to heating calls above this outdoor temp
Adjust Outdoor	°F (difference)	-10	+10	0	This value plus outdoor sensor reading equals outdoor temp (Use this setting to compensate for solar gain or other factors that cause a shift in sensor temperature.)
Add'l Heat Demand Type	Types	Off	Type 4	Off	Type 1 — Ultra is primary source, starts secondary after delay (requires system sensors) Type 2 — Ultra is secondary source, starts primary immediately Type 3 — Boilers operate in parallel, Ultra boiler is master, outputs 0–10 VDC to others Type 4 — Boilers operate in parallel, Ultra boiler is slave, receives 0–10 VDC input
Add'l Heat Demand Time	minutes	0	240	0	Delay before bringing on additional heating appliances
System Settings					
Boiler Priority 1					
System Type	Types	Off	Custom	DHW - direct	DHW-direct doesn't use ODR, boost, or Add'l heat demand output
Max Supply	°F	60	190	190	Boiler enters manual reset lockout at 200°F
Min Supply	°F	60	190	N/A	N/A - DHW does not use reset
Max OD Reset	°F	50	100	N/A	N/A - DHW does not use reset
Min OD Reset	°F	–20	50	N/A	N/A - DHW does not use reset
Modulate On Diff	°F	2	10	5	Boiler turns on if temperature drops below target minus differential on
Modulate Off Diff	°F	2	10	5	Boiler shuts down if modulates past target plus differential off
Max On Time	minutes	off	240	30	Longest time boiler will satisfy this system before switching to an active lower priority
Min On Time	—	—	—	—	Priority 1 does not have this setting
Boost Interval	minutes	off	240	N/A (not used)	When operating on ODR increases target 10F when this time expires until reaching MAX
Postpump Time	seconds	off	240	30	Circulator run time after call for heat ends
Circulator 1	on-off	off	on	on	Circulator activates on this call for heat if on
Circulator 2	on-off	off	on	off	Circulator activates on this call for heat if on
Circulator 3	on-off	off	on	off	Circulator activates on this call for heat if on
Maximum Rate	%Rate	Ignition Rate	100%	96%	Boiler Model and altitude specific (derated to 96% from factory)
Minimum Rate	%Rate	20%	Ignition Rate	20%	Boiler Model and altitude specific
Boiler Priority 2					
System Type	Types			FTB	Finned-Tube Baseboard
Max Supply	°F	60	190	180	Highest target the control will calculate based on outdoor temperature Target temperature if outdoor sensor is not detected (manual reset lockout at 200°F)
Min Supply	°F	60	190	130	Lowest target the control will calculate based on outdoor air temperature
Max OD Reset	°F	50	100	70	Outdoor air temperature that forces the minimum supply water to be target temperature
Min OD Reset	°F	–20	50	0	Outdoor air temperature that forces the maximum supply water to be target temperature
Modulate On Diff	°F	2	10	5	Boiler turns on if temperature drops below target minus differential on
Modulate Off Diff	°F	2	10	5	Boiler shutsdown if modulates past target plus differential off

U-Control operation and setup *(continued)*

Figure 86 U-Control setup options (see Figure 85, page 64 for location in menu sequence), continued

Menu/Item	Units	Low Value	High Value	Default	Comment
Max On Time	minutes	off	240	30	Longest time boiler will satisfy this system before switching to an active lower priority
Min On Time	minutes	off	240	15	Time boiler will satisfy this system before switching to the next active priority
Boost Interval	minutes	off	240	off	When operating on ODR increase target 10F when this time expires until reaching MAX
Postpump Time	seconds	off	240	30	Circulator run time after call for heat ends
Circulator 1	on-off	off	on	off	Circulator activates on this call for heat if on
Circulator 2	on-off	off	on	on	Circulator activates on this call for heat if on
Circulator 3	on-off	off	on	on	Circulator activates on this call for heat if on
Maximum Rate	%Rate	Ignition Rate	100%	96%	Boiler Model and altitude specific (derated to 96% from factory)
Minimum Rate	%Rate	20%	Ignition Rate	20%	Boiler Model and altitude specific
Boiler Priority 3					
System Type	Types			Custom	
Max Supply	°F	60	190	190	Highest target the control will calculate based on outdoor temperature Target temperature if outdoor sensor is not detected (manual reset lockout at 200°F)
Min Supply	°F	60	190	70	Lowest target the control will calculate based on outdoor air temperature
Max OD Reset	°F	50	100	70	Outdoor air temperature that forces the minimum supply water to be target temperature
Min OD Reset	°F	–20	50	0	Outdoor air temperature that forces the maximum supply water to be target temperature
Modulate On Diff	°F	2	10	5	Boiler turns on if temperature drops below target minus differential on
Modulate Off Diff	°F	2	10	5	Boiler shutsdown if modulates past target plus differential off
Max On Time	—	—	—	—	Priority 3 does not have this setting
Min On Time	minutes	off	240	15	Time boiler will satisfy this system before switching to the next active priority
Boost Interval	minutes	off	240	off	When operating on ODR increase target 10F when this time expires until reaching MAX
Postpump Time	seconds	off	240	30	Circulator run time after call for heat ends
Circulator 1	on-off	off	on	on	Circulator activates on this call for heat if on
Circulator 2	on-off	off	on	on	Circulator activates on this call for heat if on
Circulator 3	on-off	off	on	on	Circulator activates on this call for heat if on
Maximum Rate	%Rate	Ignition Rate	100%	96%	Boiler Model and altitude specific (derated to 96% from factory)
Minimum Rate	%Rate	20%	Ignition Rate	20%	Boiler Model and altitude specific
Circulator Exercising					
Circulator 1	on-off	off	on	on	Circulators exercise 10 seconds every 72 hours of inactivity if on
Circulator 2	on-off	off	on	on	Circulators exercise 10 seconds every 72 hours of inactivity if on
Circulator 3	on-off	off	on	on	Circulators exercise 10 seconds every 72 hours of inactivity if on
Freeze Protect Circs					
Circulator 1	on-off	off	on	off	If HxOut sensor out falls below 40F boiler fires low and turns on this circ until 45F
Circulator 2	on-off	off	on	on	If HxOut sensor out falls below 40F boiler fires low and turns on this circ until 45F
Circulator 3	on-off	off	on	off	If HxOut sensor out falls below 40F boiler fires low and turns on this circ until 45F

U-Control operation and setup *(continued)*

Figure 87 U-Control diagnostic information (see Figure 85, page 64 for location in menu sequence

Menu/Item	Units	Low Value	High Value	Default	Comment
Diagnostics					
Temperatures					
Status	Text			data	Current operating status of the boiler. Prepurge, Ignition, Name of the system Type being satisfied, post purge, Warm Weather Shutdown, Trouble
System Supply	°F			data	Temperature of the remote system supply sensor
System Return	°F			data	Temperature of the remote system return sensor
Boiler Out1	°F			data	Temperature of the first sensing element of the boiler's heat exchanger outlet sensor
Boiler Out2	°F			data	Temperature of the second sensing element of the boiler's heat exchanger outlet sensor
Boiler In1	°F			data	Temperature of the boiler's heat exchanger inlet sensor
Flue1	°F			data	Temperature of the first sensing element of the boiler's flue gas sensor
Flue2	°F			data	Temperature of the second sensing element of the boiler's flue gas sensor
Outdoor	°F			data	Temperature of the remote outdoor air temperature sensor
Inputs					
Status	Text			data	Current operating status of the boiler. Prepurge, Ignition, Name of the system Type being satisfied, post purge, Warm Weather Shutdown, Trouble
Priority 1	on-off			data	Call for heat status on Priority 1 Input
Priority 2	on-off			data	Call for heat status on Priority 2 Input
Priority 3	on-off			data	Call for heat status on Priority 3 Input
Analog Input	vdc			data	Value of 0–10 VDC input signal on P15 #5 and #6
Manual Limit	open-closed			data	External manual limit P13-1 & P13-2
Auto Limit	open-closed			data	External auto limit P13-3 & P13-4
Low Wtr Cutoff	open-closed			data	Low water cutoff device on P12-3 & P12-4
Blower Tach	rpm			data	Feedback from blower sensor
Flame Signal	no units			data	Number indicating the presence and quality of the flame used to shutdown boiler
Outputs					
Gas Valve	on-off			data	Control's gas valve circuit status
Circulator 1	on-off			data	Control's circulator 1 relay status
Circulator 2	on-off			data	Control's circulator 1 relay status
Circulator 3	on-off			data	Control's circulator 1 relay status
Blower Signal	% of rate			data	Control's signal controlling the blower speed
Add'l Heat Demand	on-off			data	Control's signal controlling the additional heat demand
Alarm	on-off			data	Control's alarm contact status
Analog Output	vdc			data	Value of 0–10 VDC output signal on P16 #1 and #2
Errors					
Control Fault	#			0	Displays number of control faults
Ignition Retries	#			0	Displays number of ignition attempts boiler is currently on
Manual Reset Cnt	#			0	Displays number of manual reset lockouts since last cleared
Auto Reset Cnt	#			0	Displays number of auto reset lockouts since last cleared
Lockout History 1					Choose this to view the most recent error recorded
Time & Date	text			data	Displays time and date that lockout occurred
Status	text			data	Displays what the status of the boiler at the time of the error
Manual Reset	yes or none			data	Choose this to view the details of manual reset lockouts
Auto Reset	yes or none			data	Choose this to view the details of auto reset lockouts
Inputs	menu			menu	Choose this to view the status of the Boiler Inputs at the time of the error
Outputs	menu			menu	Choose this to view the status of the Boiler Outputs at the time of the error
Temperatures	menu			menu	Choose this to view the Boiler Temperatures at the time of the error
Lockout History 2					Choose this to view the second most recent error recorded
Time & Date	text			data	Displays time and date that lockout occurred
Status	text			data	Displays what the status of the boiler at the time of the error

U-Control operation and setup *(continued)*

Figure 87 U-Control diagnostic information (see Figure 85, page 64 for location in menu sequence), continued

Menu/Item	Units	Low Value	High Value	Default	Comment
Manual Reset	yes or none			data	Choose this to view the details of manual reset lockouts
Auto Reset	yes or none			data	Choose this to view the details of auto reset lockouts
Inputs	menu			menu	Choose this to view the status of the Boiler Inputs at the time of the error
Outputs	menu			menu	Choose this to view the status of the Boiler Outputs at the time of the error
Temperatures	menu			menu	Choose this to view the Boiler Temperatures at the time of the error
Lockout History 3					Choose this to view the third most recent error recorded
Time & Date	text			data	Displays time and date that lockout occurred
Status	text			data	Displays what the status of the boiler at the time of the error
Manual Reset	yes or none			data	Choose this to view the details of manual reset lockouts
Auto Reset	yes or none			data	Choose this to view the details of auto reset lockouts
Inputs	menu			menu	Choose this to view the status of the Boiler Inputs at the time of the error
Outputs	menu			menu	Choose this to view the status of the Boiler Outputs at the time of the error
Temperatures	menu			menu	Choose this to view the Boiler Temperatures at the time of the error
Software Versions					
Display	#.## format			data	Software version of the microprocessor on the display circuit board
Main Micro	#.## format			data	Software version of the main microprocessor on the control circuit board
Second Micro	#.## format			data	Software version of the second microprocessor on the control circuit board
Manual Test Mode					
Status	text			data	Current operating status of the boiler. Prepurge, Ignition, Name of the system Type being satisfied, post purge, Warm Weather Shutdown, Trouble
Target	°F			data	Calculated target temperature based on outdoor temp or the max setpoint if no ODR
Modulation	°F			data	Temperature of the sensor the boiler is using to base its modulation
System Supply	°F			data	Temperature of the remote mounted system water supply sensor
System Return	°F			data	Temperature of the remote mounted system water return sensor
Boiler Out	°F			data	Temperature of the outlet sensor on the boiler heat exchanger
Boiler In	°F			data	Temperature of the inlet sensor on the boiler heat exchanger
Flame Signal	no units			data	Number indicating the presence and quality of the flame used to shutdown boiler
Blower Signal	% of rate			data	Control's output to the blower
Blower Tach	rpm			data	Blower's feedback to the control
Force Rate		Low, Med, High, or Auto		Auto	Used to manually force a rate during a call for heat. Choose auto for normal operation.
Manual Reset					Reset selected condition
Maintenance Info					
Name	text			blank	Contractor name to appear in maintenance reminders and during lockouts
Phone	text			blank	Contractor phone number
Model	text			blank	Displays the boiler model selected in the boiler setup
CP Number	text			blank	Enter the CP# of the boiler
Installed	text			blank	Enter the date the boiler was installed
Last Date	text			data	Date automatically entered when Reset Reminder is choose by contractor
Next Date	text			data	Date automatically calculated when Reset Reminder is selected by contractor
Interval Settings	months	6	24	12	Contractor selects maintenance reminder frequency based on service history
Reset Reminder	menu			menu	Contractor selects this to update Last maintenance Date and Next Date. Homeowner uses this to ignore the reminder and update only the Next Date.
Set Time and Date					
Year	text			2008	Set year (homeowner or contractor)
Month	text			1	Set month (homeowner or contractor)
Day	text			1	Set day (homeowner or contractor)
Hour	text			12	Set hour (homeowner or contractor)
Minute	text			0	Set minute (homeowner or contractor)

Startup — fill the system

Freeze protection (when used)

⚠WARNING Follow these guidelines to prevent possibility of severe personal injury, death or substantial property damage:

NEVER use automotive or standard glycol antifreeze, **even glycol made for hydronic systems**. Use only freeze-prevention fluids recommended by Weil-McLain for application in Ultra Boiler systems.

Thoroughly flush any system that has used glycol before installing the new Ultra boiler.

Review the material safety data sheet (MSDS) for the fluid used with the boiler owner and leave a copy for reference. The MSDS contains information on potential hazards and first aid procedures for exposure or ingestion.

Check antifreeze inhibitor level at least annually. Glycol concentration and inhibitor levels may change over time. Add antifreeze to increase concentration. Drain system and replace fluid mixture if inhibitor level is too low.

When using freeze protection fluid with automatic fill, **install a water meter to monitor water make-up**. Freeze protection fluid may leak before the water begins to leak, causing concentration to drop, reducing the freeze protection level.

DO NOT exceed 50% antifreeze by volume. Antifreeze moves more sluggishly than water and can interfere with heat transfer. At antifreeze concentrations higher than 50%, sludge can develop in the boiler, potentially causing damage to the heat exchanger.

Clean the system before filling. Always drain and flush the system thoroughly before filling with antifreeze. Sludge, iron oxide deposits and other sediment in the system inhibit flow and can cause rapid breakdown of inhibitors.

Use only antifreeze recommended by Weil-McLain.

NOTICE Weil-McLain provides information for application of the antifreeze products listed in this document only for use in Weil-McLain Ultra boilers. Do not apply these products or instructions for other applications.

Local codes may require back flow preventer or actual disconnect from city water supply.

Startup — fill the system *(continued)*

Add the correct amount of antifreeze

1. Determine the freezing temperature needed (to protect against lowest likely temperature the system water will encounter).
2. Find the antifreeze concentration by volume needed for this temperature from the antifreeze manufacturer's data.
3. Add up the volume (gallons) of all system piping and components, including the expansion tank and boiler. Boiler water content is listed on page 105. Remember to include expansion tank water content.
4. Multiply this volume by the (percent) antifreeze needed to find the number of gallons of antifreeze to add.

Check inhibitor concentration

1. Test the pH of a sample of system water at least annually. The pH of the water mixture must be between 7.0 and 8.5.
2. If pH is outside this range, the inhibitor level may not be sufficient to prevent corrosion. Drain system, flush thoroughly with fresh water, and refill system with clean water.

⚠WARNING Test glycol concentration at least annually. If concentration is low, add antifreeze or drain system and refill with correct mixture.

3. **DO NOT** exceed 50% by volume concentrate of antifreeze.

Recommended antifreeze

Antifreeze	Source
ALPHI-11	Weil-McLain 500 Blaine Street Michigan City, IN 46360-2388 — or — Hydronic Agencies, Ltd. 15363 117 Ave. Edmonton, AB T5M 3X4, Canada Ph 780-452-8661 Fx 780-488-2304 Web www.hydronicagencies.com
Aluminum-Safe Propylene Glycol	Chemical Specialties, Inc. 4800 N. Washington St. #E Denver, CO 80216 Ph 303-675-0944 Fx 303-675-0945 e-mail chemspeciden@aol.com
Rhogard	Rhomar Water Management, Inc. P. O. Box 229 Springfield, MO 65801 Ph 800-543-5975 Fx 417-862-2610 Web www.rhomarwater.com

Water chemistry

⚠WARNING Do not use petroleum-based cleaning or sealing compounds in boiler system. Damage to elastomer seals and gaskets in system could occur, resulting in substantial property damage.

Before filling the boiler and system with water, verify the following. Failure to comply could result in boiler failure or unreliable operation.

Water pH between 7.0 and 8.5

1. Maintain boiler water pH between 7.0 and 8.5. Check with litmus paper or have chemically analyzed by water treatment company.
2. If pH differs from above, consult local water treatment company for treatment needed.

Hardness less than 7 grains

1. Consult local water treatment companies for unusually hard water areas (above 7 grains hardness).

Chlorine concentration must be LESS THAN 200 ppm

1. Filling with chlorinated fresh water should be acceptable since drinking water chlorine levels are typically less than 5 ppm.
2. Do not use the boiler to directly heat swimming pool or spa water.
3. Do not fill boiler or operate with water containing chlorine in excess of 200 ppm.

Clean system to remove sediment

1. You must thoroughly flush the system (without boiler connected) to remove sediment. The high-efficiency heat exchanger can be damaged by buildup or corrosion due to sediment.
2. For zoned systems, flush each zone separately through a purge valve. (If purge valves and isolation valves are not already installed, install them to properly clean the system.)
3. Flush system until water runs clean and you are sure piping is free of sediment.

Startup — fill the system *(continued)*

Clean the cast aluminum heat exchanger

1. In order for the efficiency of boilers to increase beyond the condensing limit, new materials have been introduced for the heat exchanger, including aluminum. Aluminum has excellent heat transfer characteristics and is light in weight.

2. These new materials also require cleaning solutions that differ from those used in conventional cast iron and steel boilers. One common cleaning method that CANNOT be used with systems containing aluminum is a solution of trisodium phosphate, commonly referred to as "TSP." The reason that trisodium phosphate cannot be used is that the cleaning solution has a very high pH level that, while removing the scale in the system, also removes the natural protective oxide layer from the aluminum. The oxide layer will reform, but if small amounts of the trisodium phosphate remain in the system, the chemical will continue to remove the protective oxide layer, leading to reduced heat exchanger life.

3. There are cleaning solutions that have been developed to clean and treat mixed metal systems. And these solutions have been successful for years. It is important that the cleaning, treatment and freeze protection products used on Ultra aluminum boilers are identified as being safe and suitable for use in hydronic heating systems. The following companies offer such products.

Hydronic Agencies, Ltd. 15363 117 Ave. Edmonton, AB T5M 3X4, Canada Ph 780-452-8661 Fx 780-488-2340 Web www.hydronicagencies.com	Rhomar Water Management, Inc. P. O. Box 229 Springfield, MO 65801 Ph 800-543-5975 Fx 417-862-2610 Web www.rhomarwater.com

Fill and test water system

1. Fill system only after ensuring the water meets the requirements of this manual.

2. Close manual and automatic air vents and boiler drain valve.

3. Fill to correct system pressure. Correct pressure will vary with each application.

   a. Typical cold water fill pressure for a residential system is 12 psi.

   b. Pressure will rise when boiler is turned on and system water temperature increases. Operating pressure must never exceed 25 psig.

4. At initial fill and during boiler startup and testing, check system thoroughly for any leaks. Repair all leaks before proceeding further.

⚠WARNING Eliminate all system leaks. Continual fresh make-up water will reduce boiler life. Minerals can build up in sections, reducing heat transfer, overheating heat exchanger, and causing heat exchanger failure.

5. The system may have residual substances that could affect water chemistry. After the system has been filled and leak tested, verify water pH and chlorine concentrations are acceptable.

Purge air from water system

1. Connect a hose to the purge valve (see purge/drain valves, item 11, in piping diagrams on Figure 15, page 17 through Figure 19, page 21. Route hose to an area where water can drain and be seen.

2. Close the boiler or system isolation valve between the purge valve and fill connection to the system.

3. Close zone isolation valves.

4. Open quick-fill valve on cold water make-up line.

5. Open purge valve.

6. One zone at a time, open the isolation valves. Allow water to run through the zone, pushing out the air. Run until no noticeable air flow is present. Close the zone isolation valves and proceed with the next zone. Follow this procedure until all zones are purged.

7. Close the quick-fill water valve and purge valve and remove the hose. Open all isolation valves. Watch that system pressure rises to correct cold-fill pressure.

8. After the system has operated for a while, eliminate any residual air by using the manual air vents located throughout the system.

9. If purge valves are not installed in system, open manual air vents in system one at a time, beginning with lowest floor. Close vent when water squirts out. Repeat with remaining vents.

10. Open automatic air vent (diaphragm-type or bladder-type expansion tank systems only) one turn.

11. Starting on the lowest floor, open air vents one at a time until water squirts out.

12. Repeat with remaining vents.

13. Refill to correct pressure.

Startup — final checks

Check for gas leaks

⚠WARNING Before starting the boiler, and during initial operation, use a leak detector or smell near the floor and around the boiler for gas odorant or any unusual odor. Remove boiler front door and smell interior of boiler enclosure. Do not proceed with startup if there is any indication of a gas leak. Repair any leak at once.

DO NOT adjust or attempt to measure gas valve outlet pressure. The gas valve is factory-set for the correct outlet pressure. This setting is suitable for natural gas and propane, requiring no field adjustment. Attempting to alter or measure the gas valve outlet pressure could result in damage to the valve, causing potential severe personal injury, death or substantial property damage.

Propane boilers only — Your propane supplier mixes an odorant with the propane to make its presence detectable. In some instances, the odorant can fade, and the gas may no longer have an odor. Before startup (and periodically thereafter), have the propane supplier verify the correct odorant level in the gas.

Check thermostat circuit(s)

1. Disconnect the two external wires connected to the boiler thermostat terminals (see Field wiring, beginning on page 54 for terminal locations).
2. Connect a voltmeter across these two incoming wires. Close each thermostat, zone valve and relay in the external circuit one at a time and check the voltmeter reading across the incoming wires.
3. There should NEVER be a voltage reading.
4. If a voltage does occur under any condition, check and correct the external wiring. (This is a common problem when using 3-wire zone valves.)
5. Once the external thermostat circuit wiring is checked and corrected if necessary, reconnect the external thermostat circuit wires. Allow the boiler to cycle.

Inspect/fill condensate system

Inspect/check condensate lines and fittings

1. Inspect the condensate drain line, condensate PVC fittings and condensate trap. (See page 50 for component locations.)
2. Pour water into the top of the boiler's ½" PVC condensate tee and check for any leaks in the condensate drain line or fittings. Repair any leaks.

Fill condensate trap with water

1. Loosen the hose clamp securing the right end of the condensate trap to the PVC reducing elbow (see page 50 for details).
2. Slide the trap hose end off of the elbow.
3. Fill the trap with fresh water to within an inch of the end of the hose.
4. Replace trap hose on PVC reducing elbow and tighten the hose clamp.

⚠WARNING The condensate trap must be filled with water during all times of boiler operation to avoid flue gas emission from the condensate drain line. [Prime the condensate trap (by pouring water into the outlet tee while restricting flow in drain tube) if boiler has been out of service for an extended period.] Failure to fill the trap could result in severe personal injury or death.

Final checks before starting boiler

- ❑ Read the instructions to adjust and set up the U-Control module.
- ❑ Verify that the boiler model is set correctly in the U-Control, and that it displays correctly.
- ❑ Verify that the boiler and system are full of water and all system components are correctly set for operation.
- ❑ Fill vent condensate trap with water (by removing hose clamp and hose at PVC reducing elbow). Replace hose on PVC reducing elbow and tighten clamp.
- ❑ Verify electrical connections are correct and securely attached.
- ❑ Inspect vent piping and air piping for signs of deterioration from corrosion, physical damage or sagging. Verify air piping and vent piping are intact and correctly installed per this manual.

To start the boiler

1. Turn OFF the boiler ON/OFF switch.
2. Read and follow the Operating Instructions, Figure 90, page 76.
3. The U-Control display will show installed sensors when first powered. Make sure the right sensors are detected. If not, determine the cause and correct before proceeding.

If boiler does not start correctly

1. Check for loose connections, blown fuse or service switch off?
2. Is external limit control (if used) open? Is boiler water temperature above 200 °F?
3. Is thermostat set below room temperature?
4. Is gas turned on at meter or boiler?
5. Is incoming gas pressure less than 5" w.c. for natural gas or 4" w.c. for propane?
6. Are parameters set correctly in this manual?
7. Is the warm weather shutdown activated?
8. If none of the above corrects the problem, refer to Troubleshooting, beginning on page 84.

Startup — final checks *(continued)*

❑ Check system and boiler

❑ Check water piping

1. Check system piping for leaks. If found, shut down boiler and repair immediately. (See WARNING on page 72 regarding failure to repair leaks.)
2. Vent any remaining air from system using manual vents. Air in the system will interfere with circulation and cause heat distribution problems and noise.

❑ Check vent piping and air piping

1. Check for gas-tight seal at every connection and seam of air piping and vent piping.

⚠WARNING Venting system must be sealed gas-tight to prevent flue gas spillage and carbon monoxide emissions which will result in severe personal injury or death.

❑ Check gas piping

1. Check around the boiler for gas odor following the procedure of page 52 of this manual.

⚠WARNING If you discover evidence of any gas leak, shut down the boiler at once. Find the leak source with bubble test and repair immediately. Do not start boiler again until corrected. Failure to comply could result in severe personal injury, death or substantial property damage.

❑ Propane boilers — verify conversion

1. Verify propane orifice has been installed per Propane Conversion instructions.

⚠WARNING DO NOT adjust or attempt to measure gas valve outlet pressure. The gas valve is factory-set for the correct outlet pressure. This setting is suitable for natural gas and propane, requiring no field adjustment. Attempting to alter or measure the gas valve outlet pressure could result in damage to the valve, causing potential severe personal injury, death or substantial property damage.

Ultra boilers are shipped ready to fire natural gas ONLY. Exception: The Ultra-80LP is factory-equipped to fire propane. You must install the propane orifice if the boiler will be connected to propane. See page 9. Failure to comply could result in severe personal injury, death or substantial property damage.

❑ Check flame & combustion <u>with instruments</u>

1. Initiate a call for heat on one of the heat demand inputs.
2. Access the U-Control installer menus by pressing and holding the UP and DOWN arrow keys for five seconds.
3. Use the U-Control display to navigate to Manual test mode (see Figure 85, page 64) and force the firing rate to MAX (high fire).
4. Look at the flame through the flame inspection window. The high fire flame should be blue and should be stable. The burner surface should be covered with orange dots.
5. Remove the flue temperature sensor from the flue pipe and insert a combustion test probe., using a calibrated combustion test instrument.
6. Test for CO_2 (or O_2) and for CO. The CO_2 values must be within 0.5% of the values listed in Figure 88. If results are acceptable, proceed to step 7. IF NOT, follow the instructions under "Throttle screw adjustment procedure" to set the throttle screw position. See WARNING below.

⚠WARNING If combustion at either high or low fire is outside the range given in Figure 88, follow the procedure given on for adjusting the throttle screw on the venturi. If throttle screw adjustment does not correct the problem, then shut down the boiler and contact your local Weil-McLain representative. Throttle screw adjustment must be done only by a qualified technician, using calibrated test instruments. Failure to comply could result in severe personal injury, death or substantial property damage.

Figure 88 Acceptable CO_2 and CO values (CO_2 values must be within 1.0% of the values listed)

Boiler	Fuel	High fire		Low fire	
		%CO_2	CO ppm	%CO_2	CO ppm
Ultra-80	NG	8.6	< 60	7.8	< 60
	LP	9.6	< 60	8.6	< 60
Ultra-105	NG	9.0	< 60	8.4	< 60
	LP	10.1	< 60	9.2	< 60
Ultra-155	NG	9.0	< 60	8.0	< 60
	LP	10.0	< 60	8.5	< 60
Ultra-230	NG	9.0	< 60	8.0	< 60
	LP	10.0	< 60	9.0	< 60
Ultra-310	NG	9.0	< 60	8.0	< 60
	LP	10.0	< 60	9.0	< 60

These values are for altitudes up to 5,500 feet. For higher altitudes, CO_2 may be slightly lower and CO slightly higher.

Startup — final checks *(continued)*

7. Measure natural gas input:
   a. Operate boiler 10 minutes.
   b. Turn off other appliances.
   c. At natural gas meter, measure time (in seconds) required to use one cubic foot of gas.
   d. Calculate gas input:

$$\frac{3600 \times 1000}{\text{number of seconds from step } \mathbf{c}} = \text{Btuh}$$

   e. Btuh calculated should approximate input rating on boiler rating label.
8. Use the U-Control display to navigate to Manual test mode (see Figure 85, page 64) and force the firing rate to MIN (low fire).
9. Look at the flame through the flame inspection window. The low fire flame should be stable and evenly distributed over burner surface with a uniform orange color.
10. Repeat the combustion test of steps 4 and 5 above.
11. Use the U-Control display to navigate to Manual test mode (see Figure 85, page 64) and force the firing rate to AUTO (normal operation).
12. Replace the flue gas temperature sensor.

⚠WARNING You must replace the flue gas temperature sensor to prevent flue gas spillage into the boiler enclosure. Failure to comply could result in severe personal injury, death or substantial property damage.

Throttle screw adjustment procedure

⚠WARNING DO NOT attempt to adjust the throttle screw unless by a qualified technician, and with the use of calibrated combustion test instruments. Adjust the throttle screw only as needed to meet the combustion values given in Figure 88.

1. This procedure is only necessary when combustion tests indicate the need, as explained under "❑ **Check flame & combustion with instruments**, page 74."
2. Boiler behavior that might indicate a need to check combustion values at high fire (as per page 74) to verify boiler is in adjustment include: difficulty igniting, poor flame stability at low fire, combustion noise or high carbon monoxide values.
3. Combustion readings must be taken at both high fire and low fire. DO NOT attempt an adjustment of the throttle screw at low fire. Just check the combustion values.
4. Use the U-Control display to navigate to Manual test mode (see Figure 85, page 64) and force the firing rate to MAX (high fire). After the boiler has had time to stabilize, take a CO_2 reading.
   a. If the CO_2 is HIGH, turn the throttle screw CLOCKWISE to lower the input. Allow the boiler to stabilize and take another reading. Continue until the desired CO_2 value is achieved.
   b. If the CO_2 is LOW, turn the throttle screw COUNTERCLOCKWISE to increase the input. Allow the boiler to stabilize and take another reading. Continue until the desired CO_2 value is achieved.
5. Lock the boiler into low fire. Check the combustion readings. If results are acceptable at low fire, verify high fire readings again. Restore firing rate to AUTO.

Figure 89 Throttle screw location (ONLY for use by a qualified technician, using calibrated combustion test instruments)

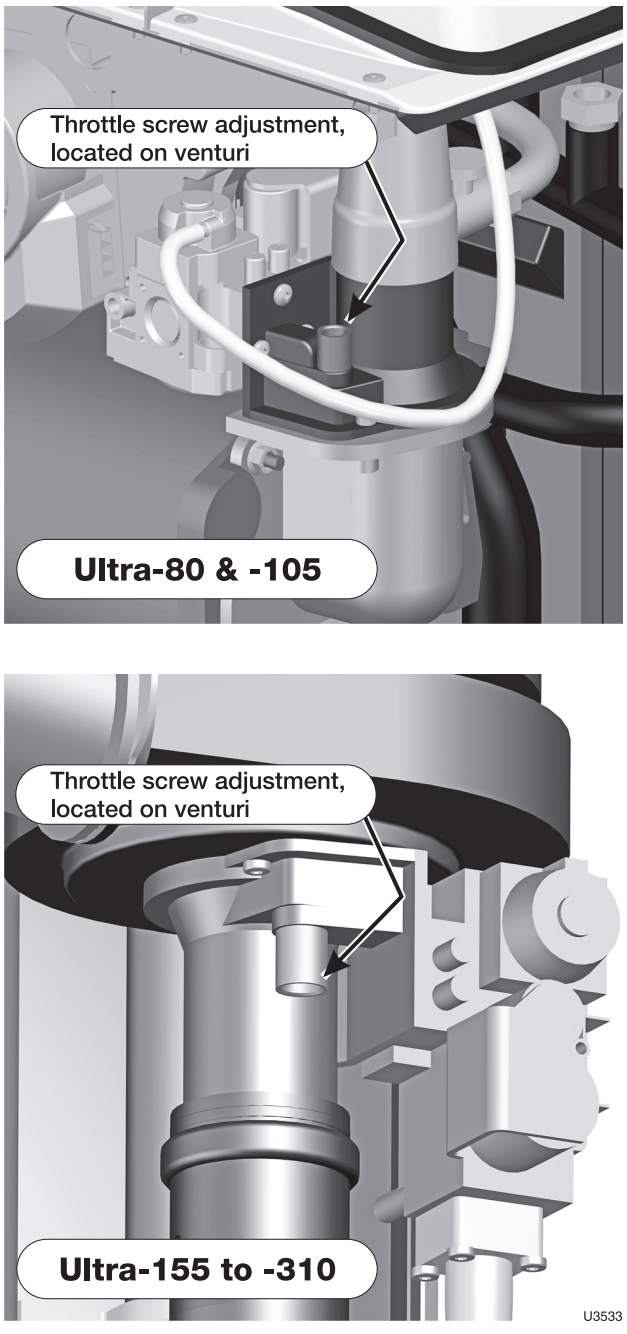

6. Consult your local Weil-McLain representative if acceptable results cannot be obtained for both high and low fire.

❑ Adjust and test boiler controls

1. Follow instructions in this manual to set and verify operation of the boiler controls.

U-Control operation and setup *(continued)*

Figure 90 Operating instructions (WARNING — Verify that the U-Control is set for the correct boiler model before proceeding.)

FOR YOUR SAFETY READ BEFORE OPERATING

⚠WARNING If you do not follow these instructions exactly, a fire or explosion may result causing property damage, personal injury or loss of life.

A. This appliance does not have a pilot. It is equipped with an ignition device which automatically lights the burner. Do not try to light the burner by hand.

B. Before OPERATING, smell all around the appliance area for gas. Be sure to smell next to the floor because some gas is heavier than air and will settle on the floor. See below.

C. Use only your hand to turn the gas control knob. Never use tools. If the knob will not turn by hand, don't try to repair it, call a qualified service technician. Force or attempted repair may result in a fire or explosion.

D. Do not use this appliance if any part has been under water. Immediately call a qualified service technician to inspect the appliance and to replace any part of the control system and any gas control, which has been under water.

WHAT TO DO IF YOU SMELL GAS

- Do not try to light any appliance.
- Do not touch any electric switch; do not use any phone in your building.
- Immediately call your gas supplier from a neighbor's phone. Follow the gas supplier's instructions.
- If you cannot reach your gas supplier, call the fire department.

OPERATING INSTRUCTIONS

1. Stop! Read the safety information at left on this label. This appliance is equipped with an ignition device which automatically lights the burner. Do not try to light the burner by hand.
2. Set room thermostat(s) to lowest setting. Verify external manual gas cock is open (valve handle parallel to gas piping).
3. Turn OFF all electrical power to the appliance.
4. Rotate two thumb screws at bottom of access door counterclockwise to release door.
5. Remove boiler access door.
6. Turn boiler manual gas valve knob counterclockwise ↶ to open gas supply.
7. Wait five (5) minutes to clear out any gas. Then smell for gas, including near the floor. If you smell gas, STOP! Follow "B" in the safety information to the left. If you don't smell gas, go to the next step.
8. Turn ON all electrical power to the appliance.
9. Set thermostat(s) to desired setting.
10. The Ultra display will show symbols and text describing the status of the boiler as it proceeds through its operating sequence. "Standby" status means there is no call for heat. A faucet or flame symbol on the display means the boiler is firing.

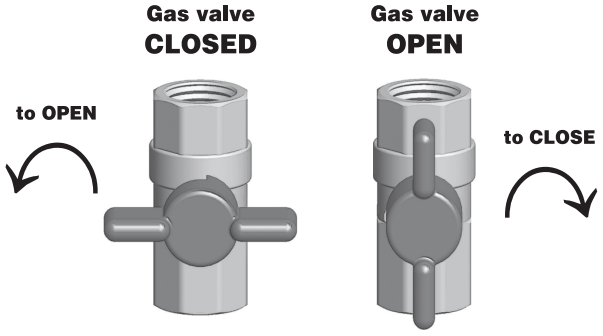

11. If the appliance will not operate when there is a call for heat and piping is not hot, follow the instructions "To Turn Off Gas To Appliance" below and call your service technician or gas supplier.
12. Replace jacket front panel. Make sure panel is seated firmly in place and all joints are visually sealed. Then tighten the two thumb screws at bottom of access door firmly.

TO TURN OFF GAS TO THE APPLIANCE

1. Set room thermostats to lowest setting.
2. Turn OFF all electrical power to the appliance.
3. Close external manual gas cock (valve handle perpendicular to gas piping). Remove boiler access door. Turn boiler manual gas valve knob clockwise ↷ to close gas supply.
4. Replace boiler access door.

550-101-248 (0508)

Check-out/startup verification

- ❑ Verified that the U-Control is set for the correct boiler model?
- ❑ Boiler and heat distribution units filled with water?
- ❑ Water chemistry verified per page 71?
- ❑ Automatic air vents, if used, open one full turn?
- ❑ Air purged from system?
- ❑ Air purged from gas piping? Piping checked for leaks?
- ❑ Primed condensate trap?
- ❑ Propane orifice installed for propane firing and propane conversion label affixed to jacket?

⚠WARNING Ultra boilers are shipped ready to fire natural gas ONLY. Exception: The Ultra-80LP is factory-equipped to fire propane. You must install the propane orifice or conversion kit (Ultra-80NG) if the boiler will be connected to propane. See page 9. Failure to comply could result in severe personal injury, death or substantial property damage.

- ❑ Thermostat circuit wiring checked to ensure there are no stray voltages?
- ❑ Followed Operating Instructions, Figure 90, page 76
- ❑ Burner flame and combustion verified per page 74?
- ❑ Verified control operation for space heating and DHW (if used) per this manual?
- ❑ Tested additional field-installed controls — If boiler has a low water cutoff, additional high limit or other controls, tested for operation as outlined by manufacturer? (Boiler should be operating and should go off when controls are tested. Verify controls cause automatic reset lockout or manual reset lockout as desired.)
- ❑ Set additional field-installed limit control(s) to system temperature requirements? Adjusted balancing valves and controls to provide design temperature to system?
- ❑ For multiple zones, adjusted for correct flow in each zone?
- ❑ Verified thermostat heat anticipator (if available) set properly?
- ❑ Cycled boiler with thermostat (and with DHW aquastat, if installed) — Raised to highest setting and verified boiler goes through normal startup cycle? Lowered to lowest setting and verified boiler goes off?
- ❑ Measured natural gas input? (page 75)
- ❑ Checked incoming gas pressure by connecting manometer to gas valve ahead of boiler? (Gas pressure must be at least 5 inches w.c. for natural gas, and 4 inches w.c. for propane, with boiler operating at high fire, and no more than 13 inches w.c. with boiler operating or boiler off.)
- ❑ Observed several operating cycles for proper operation.
- ❑ Set room thermostat to desired room temperature (and DHW aquastat, if installed, to desired DHW storage temperature)?
- ❑ Reviewed all instructions shipped with this boiler with owner or maintenance person?
- ❑ Fill in **Installation certificate**, below.
- ❑ Fill out the warranty registration card and send to Weil-McLain.
- ❑ Return instructions to envelope and give to owner or place inside boiler housing.

Installation and Service Certificate

Boiler Model _____ Series _____ CP Number _____ Date Installed _____

BTU Input _____

- ❑ Installation instructions have been followed.
- ❑ Check-out sequence has been performed.
- ❑ Above information is certified to be correct.
- ❑ Information received and left with owner/maintenance person.

Installer _____ _____

_____ _____

(Company) (Address) (Phone) (Installer's Signature)

Annual startup and general maintenance

Figure 91 Service and maintenance schedules

Service technician

(see following pages for instructions)

ANNUAL START-UP (See First-year special inspection)

General:

- Reported problems
- Inspect interior; clean and vacuum if necessary; WARNING — no solvents
- Clean condensate trap and fill with fresh water
- Check for leaks (water, gas, flue, condensate)
- Check system water chemistry
- Verify flue and air lines in good condition and sealed tight
- Check system water pressure/system piping/expansion tank
- Check control settings
- Ignition electrode (clean with steel wool and reposition)
- Ignition and ground wiring
- Wiring and connections
- Perform start-up checkout and performance verification beginning with Startup — fill the system, page 70
- Flame inspection (stable, uniform)
- Flame signal (see Figure 92, page 82)
- Clean heat exchanger if flue temp is more than 54°F above return water temp
- Inspect jacket front door gaskets; replace if necessary

Additional if combustion or performance indicate need:

- Clean heat exchanger
- Remove and clean burner using compressed air only
- Vacuum the blower

Review:

- Review with owner

Owner maintenance

(see Ultra User's Information Manual for instructions)

Daily	Check boiler area Check air openings Check pressure/temperature gauge Verify boiler front door is securely in place
Monthly	Check vent piping Check air piping Check relief valve Check condensate drain system Check automatic air vents (if used)
Periodically	Test low water cutoff (if used)
Every 6 months	Check boiler piping (gas and water) Operate relief valve
End of season	Shut boiler down (unless boiler used for domestic water)

⚠WARNING Follow the service and maintenance procedures given throughout this manual and in component literature shipped with the boiler. Failure to perform the service and maintenance could result in damage to the boiler or system. Failure to follow the directions in this manual and component literature could result in severe personal injury, death or substantial property damage.

Annual startup

HANDLING CERAMIC FIBER MATERIALS

REMOVAL OF COMBUSTION CHAMBER LINING

⚠WARNING The combustion chamber lining in this product contains ceramic fiber material. Ceramic fibers can be converted to cristobalite in very high temperature applications. The International Agency for Research on Cancer (IARC) has concluded, "Crystalline silica inhaled in the form of quartz or cristobalite from occupational sources is carcinogenic to humans (Group 1).":

- Avoid breathing dust and contact with skin and eyes.
  - Use NIOSH certified dust respirator (N95). This type of respirator is based on the OSHA requirements for cristobalite at the time this document was written. Other types of respirators may be needed depending on the job site conditions. Current NIOSH recommendations can be found on the NIOSH web site at http://www.cdc.gov/niosh/homepage.html. NIOSH approved respirators, manufacturers, and phone numbers are also listed on this web site.
  - Wear long-sleeved, loose fitting clothing, gloves, and eye protection.
- Apply enough water to the combustion chamber lining or base insulation to prevent airborne dust.
- Remove combustion chamber lining or base insulation from the boiler and place it in a plastic bag for disposal.
- Wash potentially contaminated clothes separately from other clothing. Rinse clothes washer thoroughly.

NIOSH stated First Aid

- Eye: Irrigate immediately
- Breathing: Fresh air.

FIRST-YEAR SPECIAL INSPECTION

NOTICE **It is recommended that you obtain a Weil-McLain Ultra Boiler Maintenance kit before attempting the first-year inspection, to ensure all parts that may be needed are available**. This kit includes a heat exchanger cover plate gasket, burner gasket (80 and 105 only), new ignitor, and ignitor gasket. See listing in Replacement parts section of this manual. These parts must be on hand when you perform the first-year inspection in the event they must be replaced.

⚠WARNING Failure to replace the items above when needed could result in severe personal injury, death or substantial property damage.

1. **No later than 12 months** after the boiler is installed, perform a first-year inspection of the boiler. This must include the following **in addition to routine annual start-up procedures**.
   a. Remove the heat exchanger cover plate. Inspect the heat exchanger and clean if necessary. See instructions for removing and replacing the heat exchanger cover plate, and for cleaning the heat exchanger, in the Maintenance section of this manual. Replace the cover plate gasket if not in good condition.
   b. Inspect the burner gasket (80 and 105), and replace if necessary. Make sure the burner is clean, and that is is fastened tightly to the cover plate.
   c. Disconnect condensate trap and drain lines. Inspect, then flush thoroughly.
2. Determine follow-up maintenance and service needs based on the condition of the heat exchanger and condensate lines.
   a. If the heat exchanger shows substantial fouling, or if condensate lines show accumulation of sediment, schedule a follow-up service call to perform the first-year inspection again, sooner than the normal twelve months between.
   b. Heavy fouling of the exchanger or condensate lines indicates possible combustion air contamination. Inspect the air intake area carefully, and remove possible contaminants. See " Corrosive contaminants and sources," Figure 30, page 30, for products to avoid.

⚠WARNING You must eliminate causes of corrosion and contamination to ensure reliable operation of the boiler and system.

Annual startup *(continued)*

⚠WARNING The boiler should be inspected and started annually, at the beginning of the heating season, only by a qualified service technician. In addition, the maintenance and care of the boiler designated in Table 5 and explained on the following pages must be performed to assure maximum boiler efficiency and reliability. Failure to service and maintain the boiler and system could result in equipment failure.

⚠WARNING Electrical shock hazard — Turn off power to the boiler before any service operation on the boiler except as noted otherwise in this instruction manual. Failure to turn off electrical power could result in electrical shock, causing severe personal injury or death.

Address reported problems

1. Inspect any problems reported by owner and correct before proceeding.

Inspect boiler area

1. Verify that boiler area is free of any combustible materials, gasoline and other flammable vapors and liquids.
2. Verify that air intake area is free of any of the contaminants listed on page 8 of this manual. If any of these are present in the boiler intake air vicinity, they must be removed. If they cannot be removed, reinstall the air and vent lines per this manual and the Ultra Boiler Vent Supplement.

Inspect boiler interior & door gaskets

1. Remove jacket front door and inspect interior of boiler.
2. Visually inspect the door gaskets. Make sure all are in good condition. Obtain replacements if any gasket is damaged.

⚠WARNING Door gaskets must be intact, and must provide a reliable seal. Replace any damaged gasket.

3. Remove the venturi air inlet silencer and clean if necessary. Replace silencer.
4. Vacuum any sediment from the inside of the boiler and components. Remove any obstructions.

⚠WARNING Do not use solvents to clean any of the boiler components. The components could be damaged, resulting in unreliable or unsafe operation.

Clean condensate trap

1. Loosen condensate trap line hose clamps and remove trap line.
2. Empty water from trap line and inspect. Flush out if needed with fresh water.
3. Check condensate elbow and tee and condensate line to drain. Flush if necessary to clean.
4. Reinstall condensate trap line and tighten hose clamps.
5. Fill trap with fresh water by pouring into upturned end of PVC condensate tee.

Check all piping for leaks

⚠WARNING Eliminate all system or boiler leaks. Continual fresh make-up water will reduce boiler life. Minerals can build up in sections, reducing heat transfer, overheating heat exchanger, and causing heat exchanger failure. Leaking water may also cause severe property damage.

1. Inspect all water and gas piping and verify to be leak free.
2. Look for signs of leaking lines and correct any problems found.
3. Check gas line using procedure on page 52.

Check air openings

1. Verify that combustion and ventilation air openings to the boiler room and/or building are open and unobstructed. Check operation and wiring of automatic combustion air dampers, if used.
2. Verify that boiler vent discharge and air intake are clean and free of obstructions.

Flue vent system and air piping

1. Visually inspect entire flue gas venting system (and air piping, if installed) for blockage, deterioration or leakage. Repair any joints that show signs of leakage in accordance with vent manufacturer's instructions. When air is ducted to boiler, verify that air inlet hose is connected and properly sealed.

⚠WARNING Failure to inspect for the above conditions and have them repaired can result in severe personal injury or death.

Check water system

1. Verify all system components are correctly installed and operational.
2. Check the cold fill pressure for the system. Verify it is correct (usually around 12 psig).
3. Watch the system pressure as the boiler heats up (during testing) to ensure pressure doesn't rise too high. Excessive pressure rise indicates expansion tank sizing or performance problem.

Annual startup *(continued)*

4. Inspect automatic air vents and air separators. Remove air vent caps and briefly press push valve to flush vent. Reinstall caps. Make sure vents do not leak. Replace any leaking vents.

5. Check system water chemistry (pH and hardness). See page 71.

Check expansion tank

1. Expansion tanks provide space for water to move in and out as the heating system water expands due to temperature increase or contracts as the water cools. Tanks may be open, closed or diaphragm or bladder type. See section 3 of this manual for suggested best location of expansion tanks and air eliminators.

    - Open-type — located above highest radiator or baseboard unit, usually in the attic or closet. Has a gauge glass and overflow pipe to a drain.

    - Closed-type — welded gas tight and located above boiler. Tank is partially filled with water, leaving an air cushion for expansion.

        - Make sure this type of tank is fitted with a tank fitting, such as the B & G Tank-Trol or Taco Taco-Trol. This fitting reduces gravity circulation of air-saturated tank water back to the system and prevents the air from bubbling up through the water as it returns from the system.

        - Do not use automatic air vents in systems with closed-type tanks. The air will escape from the system instead of returning to the tank. Eventually, the tank will waterlog and no longer control pressurization. The boiler relief valve will weep frequently.

    - **Diaphragm- or bladder-type** — welded gas tight with a rubber membrane to separate the tank pressurizing air and the water. May be located at any point in the system, but most often found near the boiler.

        - Systems with this type of expansion tank require at least one automatic air vent, preferably located on top of an air eliminator, as shown in examples in this manual.

2. If relief valve has tended to weep frequently, the expansion tank may be waterlogged or undersized.

    - **Closed-type tank** — tank is most likely waterlogged. Install a tank fitting if not already installed. Then check fill level per fitting manufacturer's instructions. If fill level is correct, check tank size against manufacturer's instructions. Replace with a larger tank if necessary.

    - **Diaphragm- or bladder-type** — first, check tank size to be sure it is large enough for the system. If size is too small, add additional tank (or tanks) as necessary to provide sufficient expansion. If tank size is large enough, remove tank from system and check charge pressure (usually 12 psig for residential applications). If tank won't hold pressure, membrane has been damaged. Replace tank.

Inspect ignition electrode

1. Remove the ignition electrode from the boiler heat exchanger access cover.

2. Remove any white oxides accumulated on the ignition electrode using steel wool. If the ignition electrode cannot be cleaned satisfactorily, replace ignitor with a new one.

3. Reinstall ignition electrode, making sure gasket is in good condition and correctly positioned.

4. Make sure the electrodes are parallel to each other.

Check ignition wiring

1. Check ignition cable electrical resistance. A good cable will have resistance between 900 and 1000 ohms. Replace if not acceptable.

2. Inspect boiler ground wire from heat exchanger access cover to ground terminal strip.

3. Verify all wiring is in good condition and securely attached.

4. Check ground continuity of wiring using continuity meter.

5. Replace ground wires if results are not satisfactory.

Check all boiler wiring

1. Inspect all boiler wiring, making sure wires are in good condition and securely attached.

Check control settings

1. Use the U-Control display to navigate through all settings. Adjust settings if necessary.

2. Check settings of external limit controls (if any) and adjust if necessary.

Perform startup and checks

1. Start boiler and perform checks and tests specified in this manual.

2. Verify cold fill pressure is correct and that operating pressure does not go too high.

3. Complete the check-out procedure on page 77.

Annual startup *(continued)*

Check burner flame

WARNING The boiler contains ceramic fiber materials. Use care when handling these materials per instructions on page 79 of this manual. Failure to comply could result in severe personal injury.

1. Inspect flame through observation window using the procedure on page 74.
2. If flame is unsatisfactory at either high fire or low fire, turn off boiler and allow boiler to cool down. Then remove burner and clean it thoroughly using a vacuum cleaner or compressed air. Do not use compressed air to clean burner if performed inside a building.
3. To access the burner, remove the heat exchanger cover plate following the procedure beginning on page 89.
4. When replacing burner, ensure gasket is in good condition and correctly positioned. After tightening the three retainer screws, bend up the retainer tabs as shown in Figure 93 to prevent screw rotation.
5. Reattach the cover plate using the method given in Figure 97, page 90 or Figure 99, page 91.
6. After servicing, reinstall boiler components. Retest boiler.

Check flame signal

1. Navigate to Diagnostics/Inputs on the U-Control display (see Figure 85, page 64). The flame signal value must be at least 20 above the Shutdown values given in Figure 92, page 82.

Figure 92 Flame signal shutdown values

Model Ultra –	Shutdown flame signal	Model Ultra –	Shutdown flame signal
80	95	155 HA	80
80 HA	95	230	100
105	135	230 HA	100
105 HA	135	310	130
155	80	310 HA	**130**

2. If the flame signal drops to less than 20 above the Shutdown values, the U-Control will attempt to correct by increasing the boiler firing rate to increase flame signal.
3. A lower flame signal may indicate a fouled ignitor or damaged ignitor insulation. If cleaning the ignitor does not improve, ground wiring is in good condition, and ground continuity is satisfactory, replace the ignitor.

Figure 93 Burner assembly

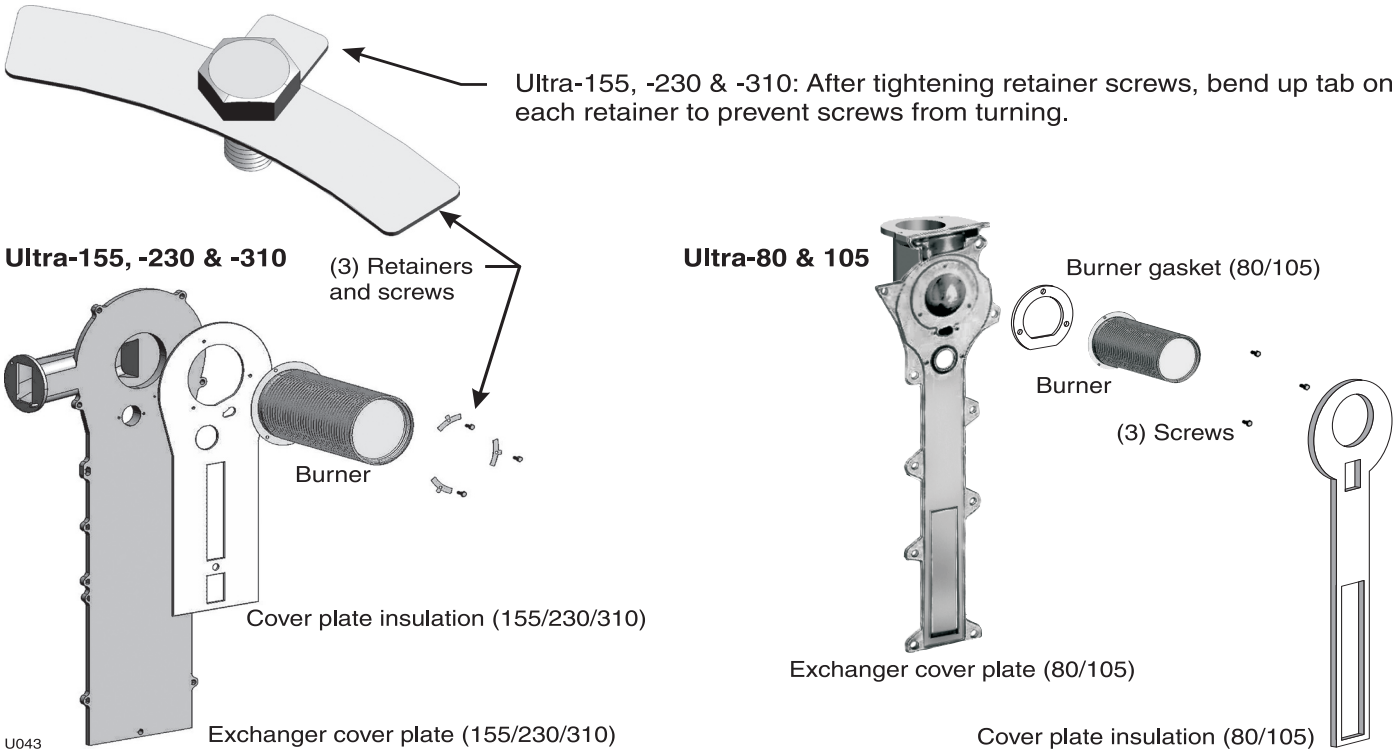

Annual startup *(continued)*

4. If flame signal still remains low, inspect the vent and air piping. Then inspect the heat exchanger, following the procedures given in this manual for removal and reinstallation of the head exchanger cover plate and other boiler components. Clean the exchanger as described in this manual if necessary.

Check flue gas temperature

1. Set the boiler to high fire. Then adjust the U-Control module display to view flue gas temperature and boiler return temperature.
2. The flue gas temperature should be no more than 54 °F higher than the boiler return temperature.
3. If the flue temperature is higher than this, shut down the boiler, allow to cool, and follow the procedure starting on page 89 to clean the heat exchanger.

Review with owner

1. Review the User's Information Manual with the owner.
2. Emphasize the need to perform the maintenance schedule specified in the User's Information Manual (and in this manual as well).
3. Remind the owner of the need to call a licensed contractor should the boiler or system exhibit any unusual behavior.
4. Remind the owner to follow the proper shutdown procedure and to schedule an annual startup at the beginning of the next heating season.

Check boiler relief valve

1. Inspect the relief valve and lift the lever to verify flow as in the following warnings, excerpted from a relief valve manufacturer's warning label. Before operating any relief valve, ensure that it is piped with its discharge in a safe area to avoid severe scald potential. Read manual section 3, page 12, before proceeding further.

⚠WARNING Safety relief valves should be reinspected AT LEAST ONCE EVERY THREE YEARS, by a licensed plumbing contractor or authorized inspection agency, to ensure that the product has not been affected by corrosive water conditions and to ensure that the valve and discharge line have not been altered or tampered with illegally. Certain naturally occurring conditions may corrode the valve or its components over time, rendering the valve inoperative. Such conditions are not detectable unless the valve and its components are physically removed and inspected. This inspection must only be conducted by a plumbing contractor or authorized inspection agency — not by the owner. Failure to reinspect the boiler relief valve as directed could result in unsafe pressure buildup, which can result in severe personal injury, death or substantial property damage.

⚠WARNING Following installation, the valve lever must be operated AT LEAST ONCE A YEAR to ensure that waterways are clear. Certain naturally occurring mineral deposits may adhere to the valve, rendering it inoperative. When manually operating the lever, water will discharge and precautions must be taken to avoid contact with hot water and to avoid water damage. Before operating lever, check to see that a discharge line is connected to this valve directing the flow of hot water from the valve to a proper place of disposal. Otherwise severe personal injury may result. If no water flows, valve is inoperative. Shut down boiler until a new relief valve has been installed.

2. After following the above warning directions, if the relief valve weeps or will not seat properly, replace the relief valve. Ensure that the reason for relief valve weeping is the valve and not overpressurization of the system due to expansion tank waterlogging or under-sizing.

Troubleshooting

WARNING Label all wires prior to disconnection when servicing controls. Wiring errors can cause improper and dangerous operation. Always disconnect power to boiler before servicing. Failure to comply could result in severe personal injury, death or substantial property damage.

Electrical shock hazard — The boiler ON/OFF switch does not turn off all power to the boiler. Internal wiring is still powered when the switch is off.

WARNING Never jumper (bypass) any device except for momentary testing. Severe personal injury, death or substantial property damage can result.

Reinstall boiler jacket front door

WARNING Reinstall boiler jacket front door after servicing. The boiler front door must be securely fastened to the boiler to prevent boiler from drawing air from inside the boiler room. This is particularly important if the boiler is located in the same room as other appliances. Failure to keep the door securely fastened could result in severe personal injury or death.

Before troubleshooting:

1. Have the following items:
   a. Voltmeter that can check 120 VAC , 24 VAC and 12 VDC.
   b. Continuity checker.
   c. Contact thermometer.
2. Check for 120 VAC (minimum 102 VAC to maximum 132 VAC) to boiler.
3. Make sure thermostat is calling for heat and contacts (including appropriate zone controls) are closed. Check for 24 VAC between thermostat wire nuts and ground.
4. Make sure all external limit controls are either installed (and closed) or temporarily jumpered for testing.

Check the following:

1. Wire connectors to control module are securely plugged in at module and originating control. See Figure 96, page 87 for wire harness information.
2. Gas pressures:
   - Maximum: 13" w.c. with no flow (lockup) or with boiler on
   - Minimum: 5" w.c. for natural gas, or 4" w.c. for propane, with gas flowing (verify during boiler startup with boiler at high fire)
3. Navigate the U-Control's Diagnostics menus to check both lockout and current conditions.

Always check control module fuses

WARNING ALWAYS check control module fuses before replacing control module or any major components (blower, etc.). If one of these fuses is blown, it can prevent control module or other components from operating.

1. Turn OFF power to boiler at external line switch.
2. Remove jacket door and jacket top panel. Rotate the swing-away control panel forward to expose the U-Control module.
3. Remove and inspect the two fuses (located as shown below).

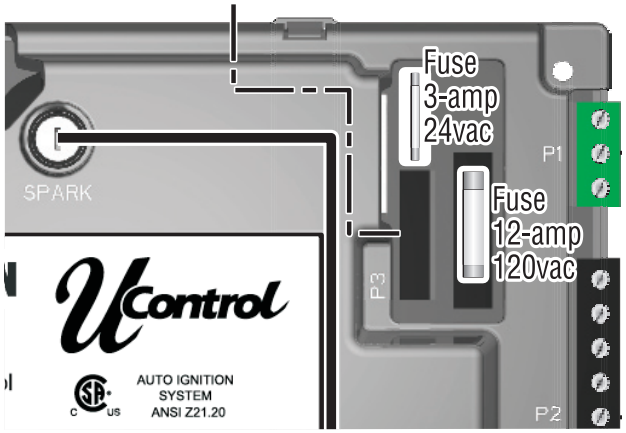

4. If necessary, replace the fuse:
   a. Low voltage circuit fuse is 3-amp fast-blow (Littelfuse 326012P).
   b. Line voltage circuit fuse is 12-amp slow-blow (Littelfuse 257003).

WARNING Do not jumper fuse or replace with any fuse except as specified. Failure to comply could result in severe personal injury, death or substantial property damage.

5. Reinstall jacket top panel and boiler jacket door after checking the fuses.
6. Restore power to boiler at external line switch and verify boiler operation after completing boiler service.

VERIFY PROPER OPERATION AFTER SERVICING.

Troubleshooting *(continued)*

U-Control fault indications

1. The U-Control provides information for both automatic reset conditions and manual reset conditions. See Figure 87, page 68 for information available on the U-Control display.
2. Figure 94 lists conditions that will cause the control to display a constant red screen. The boiler will automatically restart if the condition self-corrects or the technician uses the U-Control's manual reset screens to reset.
3. Figure 95 shows the screen behavior during an automatic or manual reset condition. The table below the display illustration lists manual reset conditions and how to reset from them.

⚠WARNING Make sure to determine the causes of outages. Do not leave the boiler operating without a complete diagnosis.

Figure 94 Conditions that will cause an automatic reset problem notification (screen constant red, with exclamation mark symbol)

Message displayed	Condition causing automatic reset	Reset action
Display fault	Display communications out for 30 seconds	Resets automatically when communication is re-established
Automatic reset limit open	Set if auto reset limit open	Reset after auto reset is closed for 2.5 minutes Reset with manual reset on display
Supply water temperature high	Set if the supply water temperature is higher than 200 °F	Reset after heat exchanger outlet temperature is less than burner on temperature Reset with manual reset on display
Return water temperature high (heat exchanger input)	Set if the return water temperature is higher than 200 °F	Reset after heat exchanger inlet temperature is less than burner on temperature Reset with manual reset on display
Return water temperature greater than supply water temperature	Set if heat exchanger inlet temperature is higher than the heat exchanger outlet temperature + 10 °F	Reset when return temperature minus 9 °F is less than supply temperature or Reset with manual reset on display
Supply water rising too fast	Set if supply water temperature rises faster than 2 °F per second	Reset after 1 minute delay Reset with manual reset on display
Supply greater than return by 58 °F	Set if current heat exchanger outlet temperature is greater than the heat exchanger inlet temperature + 58 °F	Reset after 0.5 minute delay Reset with manual reset on display
Temperature sensors	Supply sensor open or shorted Return sensor open or shorted Set if flue sensor not balanced (more than10 °F difference between sensors) Set if heat exchanger outlet sensor not balanced (more than10 °F difference between sensors)	Reset if sensors balance
Flue temperature high	Set if flue temperature over 210 °F	Reset after 1.5 minute delay
LWCO fault	Set if LWCO open goes to manual reset lockout if open more than 1 second	Reset when closed

Checking temperature sensors

1. The boiler temperature sensors (flue, outdoor, return water and supply water) are all resistance-type devices.
2. The table at right shows the correct value for the sensor at various temperatures.
3. Use the resistance values at 32°F, 60°F, 70°F and 212°F to measure the sensor resistance at known temperatures (ice point, room temperature and sea level boiling point). For ice point and boiling point, insert the sensor in water at that temperature. Use an ohmmeter to read resistance value.
4. To check whether the control module is correctly sensing temperature, you can use a resistance decade box. Connect the decade box temporarily in place of a sensor and read the corresponding temperature on the U-Control display. The temperature should be close to the value corresponding to the input resistance.

Sensor resistance values

Temp (°F)	Sensor ohms		Temp (°F)	Sensor ohms	
	Min	Max		Min	Max
32	34265	37871	**120**	4517	4992
40	27834	30764	**130**	3698	4088
50	21630	23907	**140**	3043	3364
60	16944	18727	**150**	2517	2782
70	13372	14780	**160**	2091	2311
80	10629	11747	**170**	1744	1928
90	8504	9399	**180**	1461	1615
100	6847	7568	**190**	1229	1359
110	5545	6129	**200**	1038	1147

Troubleshooting *(continued)*

Figure 95 U-Control display toggles when in lockout, with screen flashing red to gray

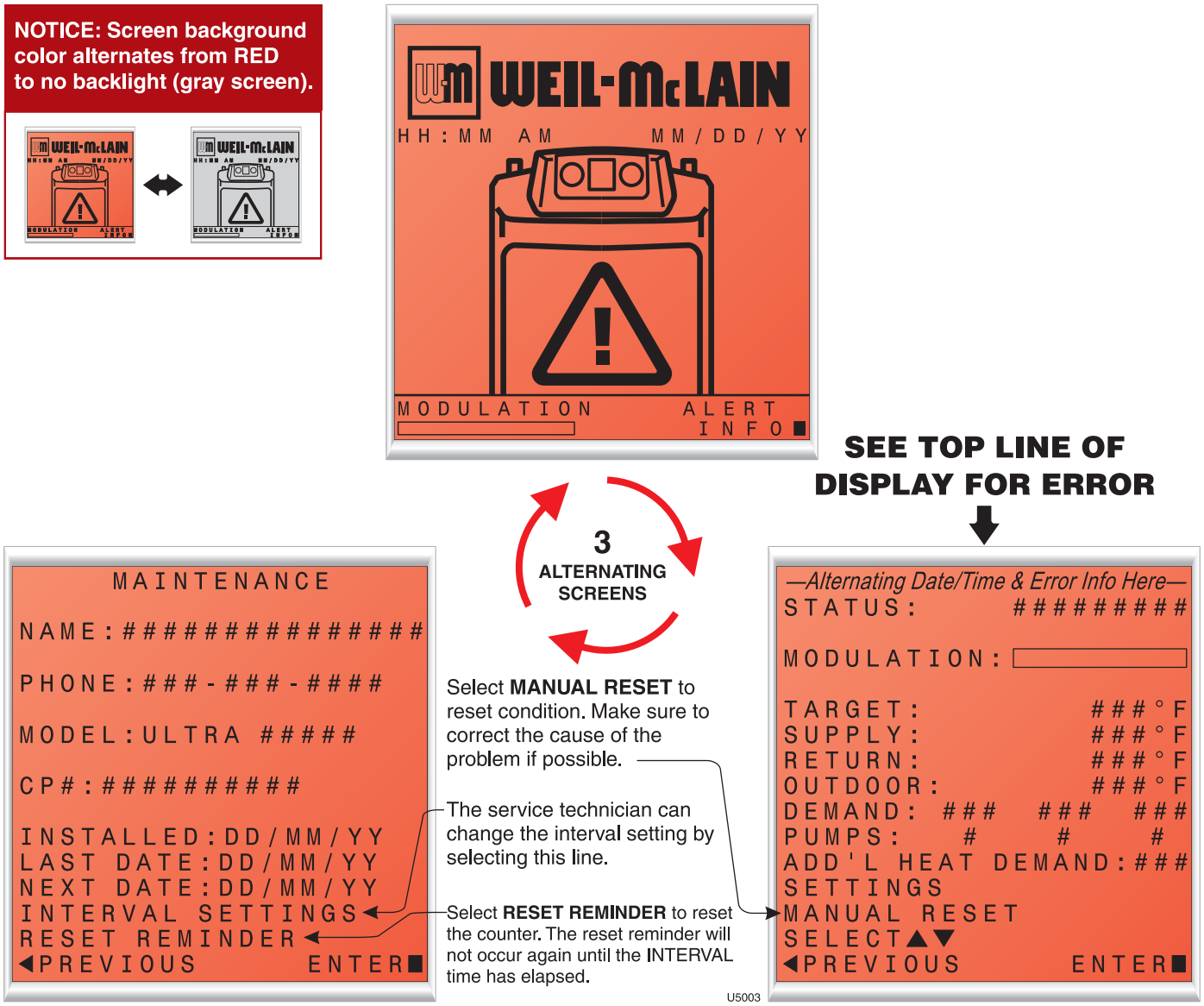

Message displayed	Condition causing manual reset / lockout	Reset action
Manual reset limit open	Set if manual reset limit open	Reset with manual reset on control
Heat exchanger temp high	Set if either the heat exchanger outlet or inlet is higher than 200f	Reset with manual reset on display
Supply water too fast	Set if supply water too fast has occurred 5 times since last power cycle	Reset with manual reset on display (also resets 5 times counter)
Supply > return by 58 °F	Set if supply > return has occurred 20 times since last power cycle	Reset with manual reset on display (also resets 20 times counter)
Temperature sensors	Hx inlet or outlet, or flue sensor is open or shorted	Reset with manual reset on display
Flue temperature high	Set if flue temp > 220 °F	Reset with manual reset on display
Flame fault	Flame detected when there should be no flame (actual flame or flame detect circuit hardware fault)	Reset with manual reset on display
Ignition fault	Set if more than 5 ignition retries	Reset with 1 hr auto reset – OR – with power cycle
Hardware fault	Set if issue with flame detect hardware (could see dual fault here - flame and hardware) Ram check fails or rom check fails	Reset with manual reset on display
Gas valve fault	Occurs if hardware controlling the gas valve does not open or close during the ignition sequence as expected within allotted time.	Reset with manual reset on display
Blower fault	Occurs if there is rpm feedback when blower should be off during ignition sequence. Occurs if rpm cannot be control to within +/-100rpm before ignition. Occurs if there is no rpm feedback during ignition sequence.	Reset with manual reset on display
Lwco fault	Set if open more than 1 second	Reset with manual reset on display

Troubleshooting *(continued)*

Figure 96 Ultra wire harness details (⊃ = factory jumper)

Pins	Function	Wire ID / Color	Pin — In	Pin — Out	Wire ID / Color	Pin — In	Pin — Out
		Upper High Voltage Harness			**Lower High Voltage Harness**		
		Wire ID / Color	Pin - In	Pin - Out	Wire ID / Color	Pin - In	Pin - Out
P1: Pin 1	Power (120VAC): Hot	2 to 1 to 7 / Black	1	4 - Male Flange Connector	3 / Black	4 - Female Flange Connector	1 - Receptacle Hot
P1: Pin 2	Power (120VAC): Neutral	3 to 6 / White	2	5 - Male Flange Connector	2 / White	5 - Female Flange Connector	2 - Receptacle Neutral
P1: Pin 3	Power (120VAC): Earth Ground	4 to 5 / Green	3	6 - Male Flange Connector	1 / Green	6 - Female Flange Connector	3 - Receptacle Ground
P2: Pin 1	Circulator 1 Hot						
P2: Pin 2	Circulator 2 Hot						
P2: Pin 3	Circulator 3 Hot						
P2: Pin 4	Circulator 1 Neutral						
P2: Pin 5	Circulator 2 Neutral						
P2: Pin 6	Circulator 3 Neutral						
P2: Pin 7	Circulator 1 Ground						
P2: Pin 8	Circulator 2 Ground						
P2: Pin 9	Circulator 3 Ground						
P3: Pin 1	Transformer: 120VAC Hot	/ Black	1	Transformer 120VAC Hot	**Not part of harness — directly terminated to transformer**		
P3: Pin 2	—						
P3: Pin 3	Transformer: 120VAC Neutral	/ White	3	Transformer 120VAC Neutral			
P3: Pin 4	—						
P3: Pin 5	—						
P3: Pin 6	Transformer: 24VAC Common	/ Blue	6	Transformer 24VAC Common			
P3: Pin 7	Transformer: 24VAC Hot	/ Yellow	7	Transformer 24VAC Hot			
P4: Pin 1	Blower Power: Hot	8 / Black	1	3 - Male Flange Connector	4 / Black	3 - Female Flange Connector	2 - Blower Hot
P4: Pin 2	Blower Power: Neutral	9 / White	2	2 - Male Flange Connector	5 / White	2 - Female Flange Connector	1 - Blower Neutral
P4: Pin 3	Blower Power: Ground	10 / Green	3	1 - Male Flange Connector	6 / Green	1 - Female Flange Connector	3 - Blower Ground
		Upper Low Voltage Harness			**Lower Low Voltage Harness**		
		Wire ID / Color	Pin - In	Pin - Out	Wire ID / Color	Pin - In	Pin - Out
P5: Pin 1	Blower: V+	12 / White	1	13 - Male Flange Connector	12 / White	13 - Female Flange Connector	1 - Blower V+
P5: Pin 2	Blower: RPM	13 / Red	2	12 - Male Flange Connector	13 / Red	12 - Female Flange Connector	2 - Hall Sensor Out
P5: Pin 3	Blower: PWM	14 / Black	3	11 - Male Flange Connector	14 / Black	11 - Female Flange Connector	4 - PWM Input
P5: Pin 4	Blower: V-	15 / Blue	4	10 - Male Flange Connector	15 / Blue	10 - Female Flange Connector	5 - Blower V-
P6: Pin 1	Gas Valve: (+)	10 / Blue	1	15 - Male Flange Connector	10 / Blue	15 - Female Flange Connector	1 - Gas Valve
P6: Pin 2	Gas Valve: (-)	11 / Blue	2	14 - Male Flange Connector	11 / Blue	14 - Female Flange Connector	5 - Gas Valve
P7: Pin 1	Hx Inlet (+) 1	7 / Red	1	2 - Male Flange Connector	7 / Red	2 - Female Flange Connector	1 - Hx Inlet (+)
P7: Pin 2	Hx Inlet Com	8 / Red	2	1 - Male Flange Connector	9 / Red	1 - Female Flange Connector	3 & 4 - Hx Inlet Com
P7: Pin 3	Hx Inlet (+) 2	9 / Red	3	9 - Male Flange Connector	8 / Red	9 - Female Flange Connector	2 - Hx Inlet (+)
P7: Pin 4	Pres Switch	⊃ Red	4	5 - Wire Jumped			
P7: Pin 5	Pres Switch		5	4 - Wire Jumped			
P8: Pin 1	Flue (+) 1	1 / Yellow	1	8 - Male Flange Connector	1 / Yellow	8 - Female Flange Connector	1 - Flue (+)
P8: Pin 2	Flue Com	2 / Yellow	2	7 - Male Flange Connector	3 / Yellow	7 - Female Flange Connector	3 & 4 - Flue Com
P8: Pin 3	Flue (+) 2	3 / Yellow	3	6 - Male Flange Connector	2 / Yellow	6 - Female Flange Connector	2 - Flue (+)
P8: Pin 4	Hx Outlet 1 (+)	4 / Red	4	5 - Male Flange Connector	4 / Red	5 - Female Flange Connector	1 - Outlet (+)
P8: Pin 5	Hx Outlet Common	5 / Red	5	4 - Male Flange Connector	6 / Red	4 - Female Flange Connector	3 & 4 - Hx Outlet Com
P8: Pin 6	Hx Outlet 2 (+)	6 / Red	6	3 - Male Flange Connector	5 / Red	3 - Female Flange Connector	2 - Outlet (+)
P8: Pin 7	Hx Safety 1 (+)						
P8: Pin 8	Hx Safety Common						
P8: Pin 9	Hx Safety 2 (+)						

Troubleshooting *(continued)*

Figure 96 Ultra wire harness details (= factory jumper), continued

Pins	Function	Wire ID / Color	Pin — In	Pin — Out	Wire ID / Color	Pin — In	Pin — Out
		591-391-946 Control / Display					
P9: Pin 1	RS485 A	1 / Brown	1	1 - Display RS485 A			
P9: Pin 2	RS485 B	2 / Orange	2	2 - Display RS485 B			
P9: Pin 3	Com	3 / Black	3	3 - Display Com			
P9: Pin 4	24VAC-R	4 / Red	4	4 - Display 24VAC-R			
P10: Pin 1	ODT Sensor: (+)						
P10: Pin 2	ODT Sensor: (-)						
P11: Pin 1	DHW Thermistor 1+						
P11: Pin 2	DHW Thermistors Common						
P11: Pin 3	DHW Thermistor 2+						
P11: Pin 4	Call For Heat Priority 1						
P11: Pin 5	Call For Heat Priority 1 (24 VAC)						
P12: Pin 1	LWCO: 24 VAC -R						
P12: Pin 2	LWCO: Common						
P12: Pin 3	LWCO:	**Black jumper**					
P12: Pin 4	LWCO:						
P13: Pin 1	Hard Limit (24 VAC)	**Jumper Tyco/Phoenix**					
P13: Pin 2	Hard Limit						
P13: Pin 3	Soft Limit	**Jumper Tyco/Phoenix**					
P13: Pin 4	Soft Limit						
P14: Pin 1	System Supply Water Temp (+)						
P14: Pin 2	Return & supply common (2 wire)						
P14: Pin 3	System Return Water Temp (+)						
P15: Pin 1	Call For Heat Priority 2						
P15: Pin 2	Call For Heat Priority 2 (24VAC R)						
P15: Pin 3	Call For Heat Priority 3 (24VAC R)						
P15: Pin 4	Call For Heat Priority 3						
P15: Pin 5	Modulating Input (common)						
P15: Pin 6	Modulating Input						
P16: Pin 1	0-10V Multiple Boiler						
P16: Pin 2	0-10V (COM)						
P16: Pin 3	Unused						
P16: Pin 4	Alarm (dry contacts)						
P16: Pin 5	Alarm						
P16: Pin 6	Multiple Boiler Output (contact)						
P16: Pin 7	Multiple Boiler Output (contact)						
		591-391-947 Receptacle With Saftey Cap					
		1 / Black	1	Receptacle Hot			
		2 / Green	2	Receptacle Ground			
		3 / White	3	Receptacle Neutral			

Maintenance

Disconnect power

⚠WARNING Electrical shock hazard — Disconnect all electrical power to the boiler before attempting maintenance procedures. Failure to complete could result in severe personal injury, death or substantial property damage.

Install boiler jacket front door after startup or servicing

⚠WARNING Reinstall boiler jacket front door after start-up or servicing. The boiler front door must be securely fastened to the boiler to prevent boiler from drawing air from inside the boiler room. This is particularly important if the boiler is located in the same room as other appliances.

Inspect boiler jacket door gaskets. Gaskets must be in good condition, with no tears or gaps. Replace if necessary.

Failure to keep the door securely sealed and fastened could result in severe personal injury or death.

Perform start-up and check/out

⚠WARNING Removing and reinstalling components can change boiler behavior. After any maintenance procedure, you must prove the boiler is operating correctly. To do so, follow the complete procedure for boiler and system start-up, beginning on page 70. Failure to comply could result in severe personal injury, death or substantial property damage.

General maintenance

1. Oil motor in system requiring regular oiling.
2. See Oiled bearing circulators for motor oiling procedures.

Oiled bearing circulators

1. The circulator shipped with the Ultra boiler is water-lubricated. No oiling is required.
2. Check other circulators in the system. Oil any circulators requiring oil, following circulator manufacturer's instructions. Over-oiling will damage the circulator.

Cleaning the heat exchanger — pin side

⚠WARNING The boiler contains ceramic fiber materials. Use care when handling these materials per instructions on page 79 of this manual. Failure to comply could result in severe personal injury.

1. Shut down boiler:
   a. Follow "To Turn Off Gas to Appliance" instructions on boiler and Lighting instructions.
   b. Do not drain boiler unless it will be exposed to freezing temperatures. If using freeze prevention fluid in system, do not drain.
2. Allow time for boiler to cool to room temperature if it has been firing.
3. Remove jacket front door by removing two knurled head screws at lower front. Lift door away from boiler to remove.
4. Follow the applicable procedures under "Accessing & cleaning exchanger: Ultra-80 and Ultra-105 Only," page 90 or "Accessing & cleaning exchanger: Ultra-155, -230, and -310 Only," page 91.

Maintenance *(continued)*

Accessing & cleaning exchanger: Ultra-80 and Ultra-105 Only

1. Close the external manual gas valve.
2. Disconnect the flexible gas line at its flare fitting.
3. Remove the air silencer by separating it from the air adapter on the blower inlet.
4. Disconnect wiring: • gas valve plug • blower power supply plug • blower control connector • ignition cable • ground wire.
5. Release the heat exchanger cover plate by removing the nuts securing it to the exchanger.
6. Pull the entire blower/venturi/gas valve/cover plate assembly out of the boiler. (See Replacement parts section for component identification and locations.)
7. Use a vacuum cleaner to remove any accumulation on the heating surfaces. Do not use any solvent.
8. If the vacuum cleaner is unable to clean completely, wash the heating surfaces with clean, warm water. If further cleaning is necessary, use the Heat Exchanger Cleaning Tool (see Replacement parts at the end of this manual) or a piece of 20-gauge or lighter sheet metal ¾" wide by about 18 inches long to loosen deposits. See Figure 98.
9. Inspect the heat exchanger cover plate insulation. Replace if insulation is damaged. Read the ceramic fiber WARNING on page 79 before handling or disposing of ceramic fiber materials.
10. Reinstall the blower/venturi/gas valve/cover plate assembly and secure the cover plate with nuts.

⚠WARNING You must gradually tighten the cover plate nuts. For Ultra-80 and -105, follow the tightening sequence shown in Figure 97, making two or three passes with a torque wrench. The final torque MUST NOT exceed 50 inch-pounds, +/- 10 inch-pounds.

11. Reconnect wiring: • gas valve plug • blower power supply plug • blower control connector • ignition cable • ground wire.

⚠ DANGER Inspect the O-ring that should still be in the gas valve inlet adapter block. The O-ring must be in good condition and must be installed when gas valve is reconnected. Failure to comply will cause a gas leak, resulting in severe personal injury or death.

12. Reconnect the flexible gas line.
13. Reinstall the air silencer by pressing onto the air inlet adapter.
14. Perform a soap suds leak test on all interior gas piping after starting the boiler.

Cleaning the heat exchanger — water side (ALL models)

1. Follow the procedure given in "Clean the cast aluminum heat exchanger," page 72 to clean the water side of the exchanger.
2. Follow the complete procedure for boiler and system start-up, beginning on page 70.

Figure 97 Nut tightening sequence — 80 & 105 Gradually tighten the nuts, repeating the sequence shown below until the torque reaches 50 inch-pounds (+/- 10 inch-pounds)

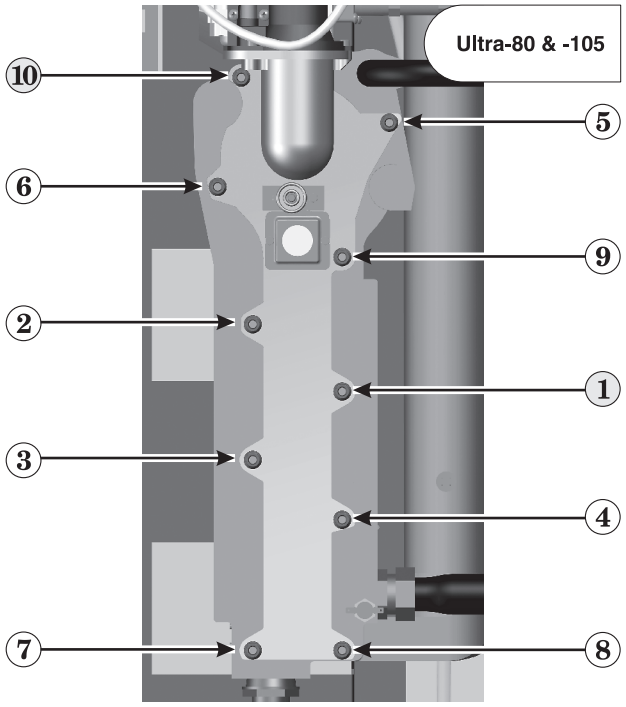

Figure 98 Cleaning the exchanger pin-side

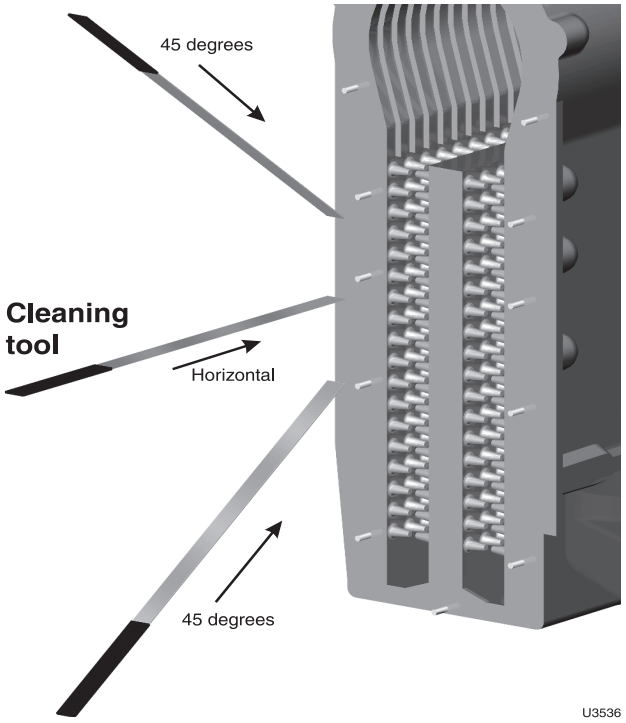

Maintenance *(continued)*

Accessing & cleaning exchanger: Ultra-155, -230, and -310 Only

1. Close the external manual gas valve.
2. Disconnect wiring: • gas valve electrical plug • two electrical molex plugs from the blower assembly • ignition cable • ground wire.
3. Disconnect the flexible gas line at its flare fitting.
4. Remove the air silencer by lifting the plastic clamp off of the gas line and then gently sliding the air silencer down and off the valve.
5. Remove hex head nuts (10mm box end wrench) from heat exchanger cover plate and remove burner cover plate from heat exchanger.
6. Pull the entire blower/venturi/gas valve/cover plate assembly out of the boiler. (See Replacement parts section for component identification and locations.)
7. Remove three M4 hex head screws (7mm box end wrench) and burner clips securing burner to cover plate. Remove cover plate.
8. Use a vacuum cleaner to remove any accumulation on the heating surfaces. Do not use any solvent.
9. If the vacuum cleaner is unable to clean completely, wash the heating surfaces with clean, warm water. If further cleaning is necessary, use the Heat Exchanger Cleaning Tool (see Replacement parts at the end of this manual) or a piece of 20-gauge or lighter sheet metal ¾" wide by about 18 inches long to loosen deposits. See Figure 98, page 90.
10. Inspect the heat exchanger cover plate insulation and gasket. Replace if damaged. Read the ceramic fiber WARNING on page 79 before handling or disposing of ceramic fiber materials.
11. Replace the burner, hex head screws and burner clips removed in step 7. See Figure 93, page 82.
12. Place cover plate gasket in groove of heat exchanger cover plate. Replace cover plate.
13. Reinstall hex head nuts on the cover plate mounting studs and tighten in a staggering pattern until cover plate is uniformly tightened.

⚠WARNING You must gradually tighten the cover plate nuts. For Ultra-155 through -310, follow the tightening sequence shown in Figure 99, making two or three passes with a torque wrench. The final torque MUST NOT exceed 50 inch-pounds, +/- 10 inch-pounds.

14. Reinstall air silencer by sliding on gas valve venturi and securing clamp to gas line.
15. Reconnect wiring: • gas valve electrical plug • two electrical molex plugs from the blower assembly • ignition cable • ground wire.
16. Reconnect the flexible gas line and gas valve electrical plug.
17. Perform a soap suds leak test on all interior gas piping after starting the boiler.

Cleaning the heat exchanger — water side (ALL models)

1. Follow the procedure given in "Clean the cast aluminum heat exchanger," page 72 to clean the water side of the exchanger.
2. Follow the complete procedure for boiler and system start-up, beginning on page 70.

Figure 99 Nut tightening sequence — 155 to 310 Gradually tighten the nuts, repeating the sequence shown below until the torque reaches 50 inch-pounds (+/- 10 inch-pounds)

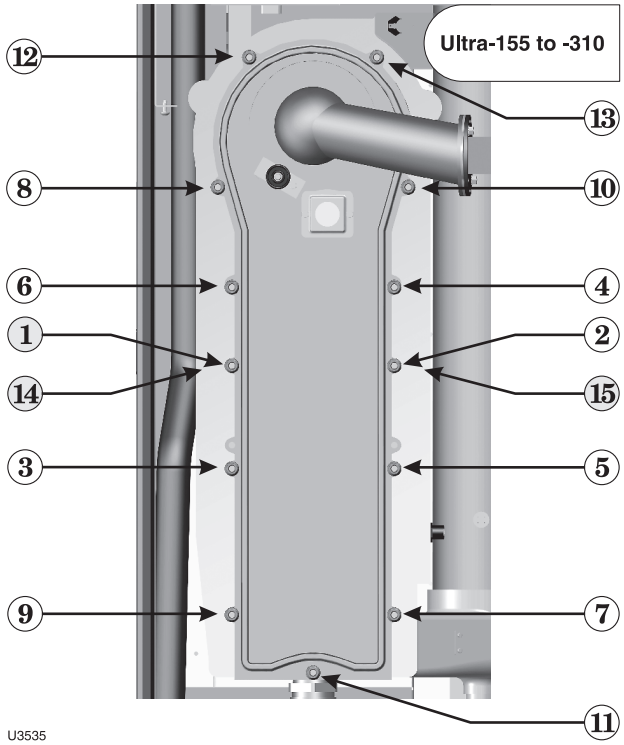

Replacement parts

WARNING Replacement parts must be purchased through a local Weil-McLain distributor. When ordering, specify boiler model and size and include description and part number of replacement part. Results from using modified or other manufactured parts will not be covered by warranty and may damage boiler or impair operation.

NOTICE Weil-McLain part numbers are found in Weil-McLain Boilers and Controls Repair Parts Lists.

WARNING **The boiler contains ceramic fiber materials**. Use care when handling these materials per instructions on page 79 of this manual. Failure to comply could result in severe personal injury.

Reinstall boiler jacket front door after startup or servicing

WARNING Inspect boiler jacket from door gaskets and reinstall boiler jacket front door after start or servicing. The boiler front door must be securely fastened to the boiler to prevent boiler from drawing air from inside the boiler room. This is particularly important if the boiler is located in the same room as other appliances. Failure to keep the door securely fastened could result in severe personal injury or death.

Figure 100 Propane conversion kits and instructions

WARNING The conversion kits listed below are only for use with Ultra Series 3 boilers. For series 1 or series 2 boilers, refer to the boiler manual or contact Weil-McLain for the correct parts.

Natural to propane conversion — **SERIES 3 BOILERS ONLY**							
Sea level (to 5,500 feet altitude)				**High altitude (above 5,500 feet)**			
Model	**Kit part #**	**Kit location**	**Instructions**	**Model**	**Kit part #**	**Kit location**	**Instructions**
Ultra-80	383-501-020	**SPECIAL ORDER**	⚠ In kit only	Ultra-80LP	383-500-644	**SPECIAL ORDER**	See page 10 or kit
Ultra-105	540-100-001 Supplied with boiler		See page 10	Ultra-105	383-500-645	**SPECIAL ORDER**	See page 10 or kit
Ultra-155	383-500-115 Supplied with boiler		See page 10	Ultra-155	383-500-646	**SPECIAL ORDER**	See page 10 or kit
Ultra-230	383-500-120 Supplied with boiler		See page 10	Ultra-230	383-500-647	**SPECIAL ORDER**	See page 10 or kit
Ultra-310	540-202-831 Supplied with boiler		See page 10	Ultra-310	383-500-648	**SPECIAL ORDER**	See page 10 or kit
Propane to natural conversion							
Ultra-80	383-501-021	**SPECIAL ORDER**	⚠ In kit only	Contact factory			

⚠ Boilers marked with this symbol require special installation procedures. Do not use the instructions in this manual — use only the instructions supplied in the conversion kit.

Replacement parts *(continued)*

Figure 101 Miscellaneous parts and kits

Item	Description			Part Number
1	Antifreeze, Alphi-11, 25 gallons			592-900-000
2	Boiler circulator, without flanges	Ultra-80 & -105 Ultra-155, -230, & -310	Taco Model 007 Taco Model 0014	511-405-113 511-405-133
3	Circulator hardware kit – inlet, 1” (1 flange, 2 nuts, 2 screws, and 1 gasket) (Ultra-80 to -230)			381-354-525
4	Circulator hardware kit (flange, nuts, screws, and gasket)	Ultra-80 to -310, 1 1/4” Ultra-310, 1 1/2”		381-354-526 381-354-531
5	Concentric vent kit			383-500-350
6	Condensate neutralizer kit			383-500-631
7	Heat exchanger cleaning tool			591-706-200
8	Maintenance kit (Igniter, igniter gasket, cover plate gasket, cover plate insulation, burner gasket, and venturi gasket)	Ultra-80 and -105 Ultra-155 to -310		383-500-605 383-500-620
9	Pressure relief valve, ASME 30 PSI, 3/4” NPT male			383-500-095
10	Vent/air termination plate (2 required for each boiler)			383-500-100
11	Vent termination bird screen (2 required)	3” vent (Ultra-80, -105 & -155) 4” vent (Ultra-230 & -310)		383-500-105 383-500-110
12	WM - PVC sidewall vent termination kit	3” 4”		383-500-397 383-500-398

Replacement parts *(continued)*

Figure 102 Jacket parts

Item	Description		Part Number
1	Jacket front door		383-500-135
2	Boiler leg kit	4 Required	383-500-065
3	Knurled head screw for jacket front door	2 Required	383-500-320
4	Knurled head screw clip-on receptacle (not shown)	2 Required	383-500-180
5	Air adapter assembly (Includes adapter, gasket and mounting bracket)	Ultra-80 & -105, 3” Ultra-155, 3” Ultra-230 & -310, 4”	383-500-606 383-500-145 383-500-150
6	Flue outlet pipe adapter	Ultra-80, -105, 3” Ultra-155, 3” Ultra-230, -310, 4”	560-900-001 383-500-155 383-500-160
7	Top cover, front		383-500-607
8	Top cover, rear	Ultra-80 to -230 Ultra-310	383-500-608 383-500-609
9	Door Gasket replacement kit (not shown)		383-500-610
10	Handle (2 required)		383-500-611

Replacement parts *(continued)*

Figure 103 Jacket parts

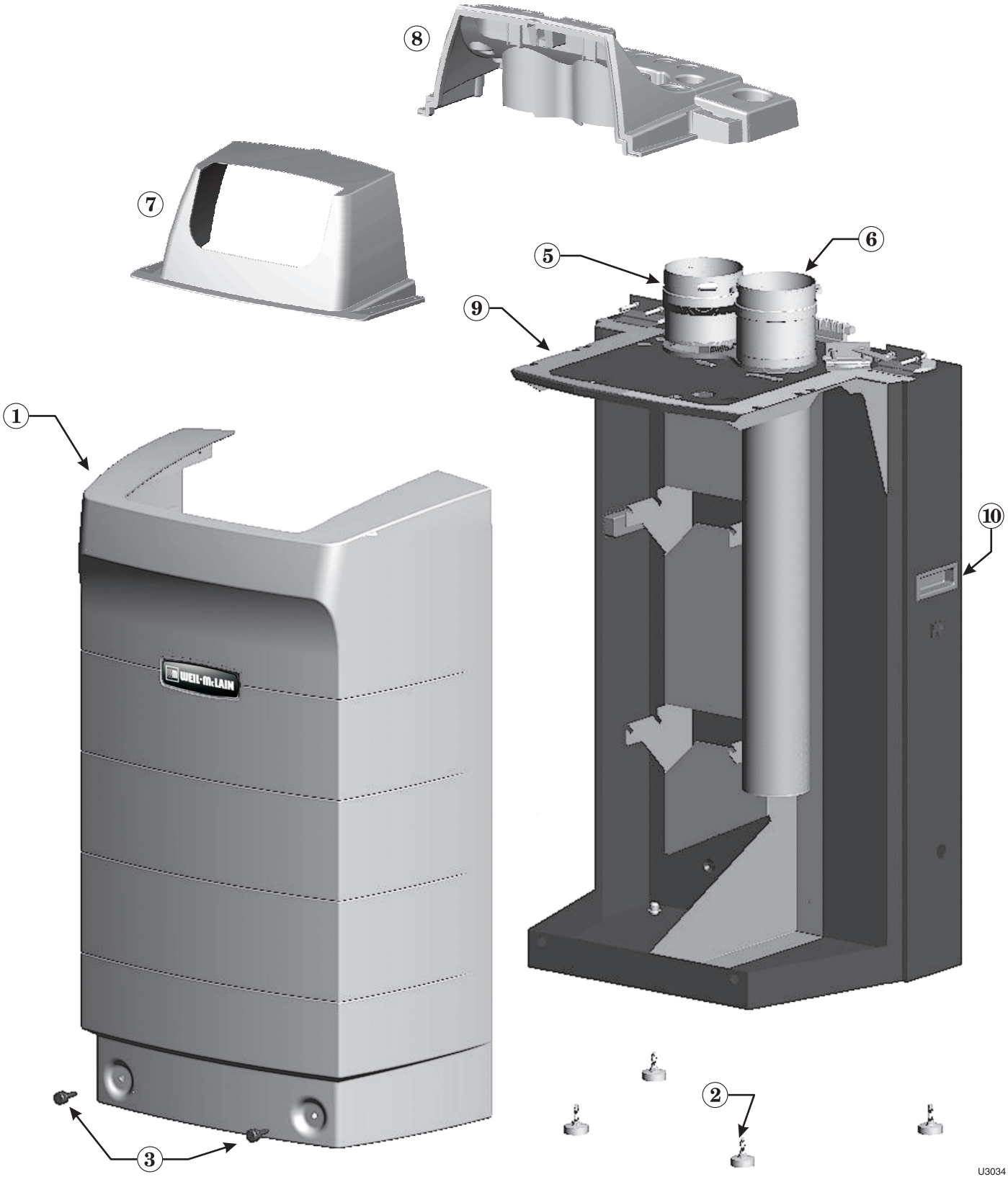

Replacement parts *(continued)*

Figure 104 Heat exchanger and piping — Ultra-80 and -105

Item	Description	Boiler Models	Part Number
1	Heat exchanger replacement kit - Heat exchanger, cover plate, burner, electrode, water sensors, compression fittings, condensate fitting, gaskets, and hardware	Ultra-80NG Ultra-80LP Ultra-105	383-500-612 383-500-613 383-500-614
2	Cover plate replacement kit - Cover plate, cover plate gasket, burner gasket, and hardware	Ultra-80, -105	383-501-022
3	Cover plate gasket/insulation	Ultra-80, -105	591-200-000
4	Burner gasket	Ultra-80, -105	590-300-000
5	Cover plate studs, M6, 1 pitch	All	560-340-598
6	Cover plate nuts, M6, 1 pitch	All	561-928-449
7	Water compression fitting, 28 mm	Ultra-80, -105	383-500-260
8	Water compression fitting, 22 mm	Ultra-80, -105	564-100-002
9	Supply water pipe assembly - Pipe, temperature well, check valve, cap (assembled) & compression fitting	Ultra-80, -105	383-501-036
10	Supply water lower pipe clamp and hardware	Ultra-80, -105	383-500-615
11	1/2” NPT well for temperature gauge	All	383-500-270
12	Pressure/temperature gauge check valve	All	383-500-275
13	Return water pipe assembly - Pipe, drain valve, cap (assembled) & compression fitting	Ultra-80, -105	383-501-037
14	Boiler drain valve, 3/4” NPT	All	511-246-392
15	Blower assembly kit - Blower, gasket, and hardware	Ultra-80, -105	383-501-027
16	Gas pipe	Ultra-80, -105	560-907-682
17	Flexible gas line section and shut-off valve	Ultra-80, -105	383-500-616
18	Gas Pipe lower pipe clamp and hardware	Ultra-80, -105	383-500-617
19	Gas valve/venturi kit - Gas valve, venturi, 90° elbow, gaskets, and hardware (assembled) (For LP boilers, make sure to reinstall the existing propane orifice)	Ultra-80 Ultra-105	383-501-029 383-501-030
20	Gasket cork, for in between gas valve venturi & burner inlet	All	590-317-310
21	Air silencer kit - Air silencer and gasket	Ultra-80, -105	383-501-026
22	Air silencer adapter kit - Air silencer adapter and hardware	Ultra-80, -105	383-501-025
23	Condensate trap kit - Condensate trap, hose clamps, pvc fittings, and gasket	Ultra-80, -105	383-500-618
24	Air inlet adapter drain tube	Ultra-80, -105	560-743-031
25	Ignition electrode kit - Ignition electrode, suppressor, gasket, and hardware	All	383-500-045
26	Ignition cable kit (not shown) - Ignition cable, suppressor, and wire tie	All	383-500-619
27	Inspection glass kit - Bracket, glass, gasket and hardware	All	383-500-020
28	Burner replacement kit - Burner, gaskets and hardware	Ultra-80NG Ultra-80LP Ultra-105	383-501-032 383-501-033 383-501-034
29	Gasket rubber, blower	Ultra-80, -105	590-300-003
30	Condensate fitting	Ultra-80, -105	561-200-000
31	Return/supply sensor kit - (1) sensor	All	383-500-602

Go to www.weil-mclain.com to locate Weil-McLain distributors

Replacement parts *(continued)*

Figure 105 Heat exchanger and piping — Ultra-80 and -105

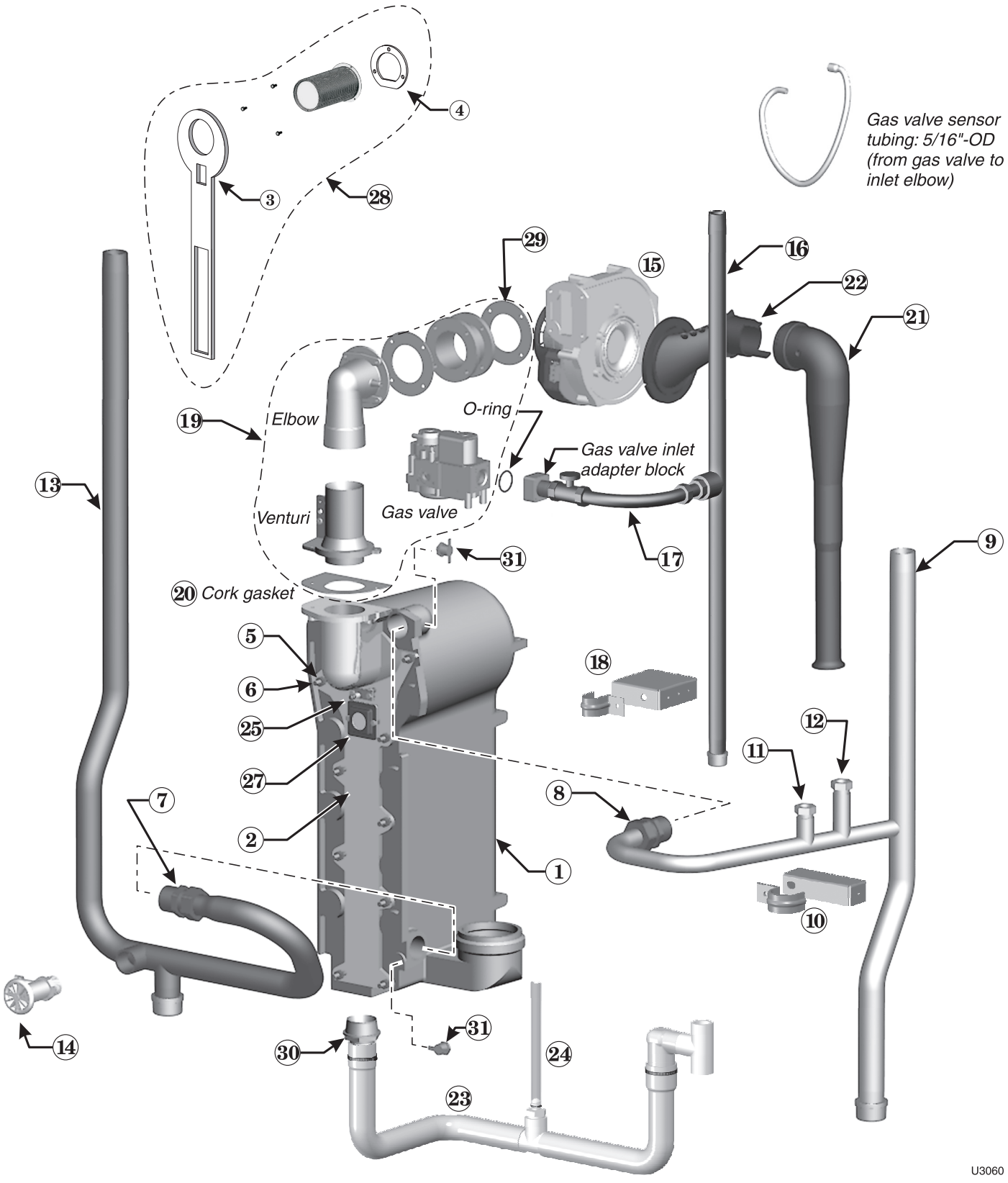

Replacement parts *(continued)*

Figure 106 Heat exchanger and piping — Ultra-155 & -230

Item	Description	Boiler Models	Part Number
1	Heat exchanger replacement kit - Heat exchanger, cover plate, burner, electrode, water sensors, compression fittings, condensate fitting, gaskets, and hardware	Ultra-155 Ultra-230	383-500-621 383-500-622
2	Cover plate replacement kit - Cover plate, cover plate gasket, burner gasket, and hardware	Ultra-155/-230	383-500-395
3	Cover plate insulation	Ultra-155/-230	383-500-250
4	Cover plate gasket	Ultra-155/-230	383-500-255
5	Cover plate studs, M6, 1 pitch	All	560-340-598
6	Cover plate nuts, M6, 1 pitch	All	561-928-449
7	Water compression fitting, 28 mm	Ultra-80, -105	383-500-260
8	Supply water pipe assembly - Pipe, temperature well, check valve, cap (assembled) & compression fitting	Ultra-155, -230	383-501-036
9	Supply water lower pipe clamp and hardware	Ultra-155, -230	383-500-615
10	1/2” NPT well for temperature gauge	All	383-500-270
11	Pressure/temperature gauge check valve	All	383-500-275
12	Return water bushing, 1 1/4” BSP x 1” BSP (not use on Ultra-310)	Ultra-155/-230	383-500-280
13	Return water pipe assembly - Pipe, drain valve, cap (assembled) & compression fitting	Ultra-155, -230	383-500-285
16	Boiler drain valve, 3/4” NPT	All	511-246-392
17	Blower assembly kit - Blower, gasket, and hardware	Ultra-155 Ultra-230	383-500-035 383-500-040
18	Gas pipe	Ultra-155, -230	560-907-683
19	Flexible gas line section and shut-off valve	Ultra-155, -230	383-500-624
20	Gas pipe lower clamp and hardware	Ultra-155, -230	383-500-617
21	Gas valve/venturi kit - Gas valve, venturi, adapter block, O-ring and hardware (assembled) ke sure to reinstall the existing propane orifice)	Ultra-155 Ultra-230	383-500-025 383-500-030
22	Gasket cork, for in between gas valve venturi & burner inlet	All	590-317-310
23	Air silencer kit - Air silencer and gasket	Ultra-155, -230	383-500-295
24	Condensate trap kit - Condensate trap, hose clamps, pvc fittings, and gasket	Ultra-155 Ultra-230	383-501-031 383-500-060
25	Ignition electrode kit - Ignition electrode, suppressor, gasket, and hardware	All	383-500-045
26	Ignition cable kit (not shown) - Ignition cable, suppressor, and wire tie	All	383-500-619
27	Inspection glass kit - Bracket, glass, gasket and hardware	All	383-500-020
28	Burner replacement kit - Burner, gaskets and hardware	Ultra-155 Ultra-230	383-500-085 383-500-090
29	Return/supply sensor kit - (1) sensor	All	383-500-602

Go to www.weil-mclain.com to locate Weil-McLain distributors

Replacement parts *(continued)*

Figure 107 Heat exchanger and piping — Ultra-155 & -230

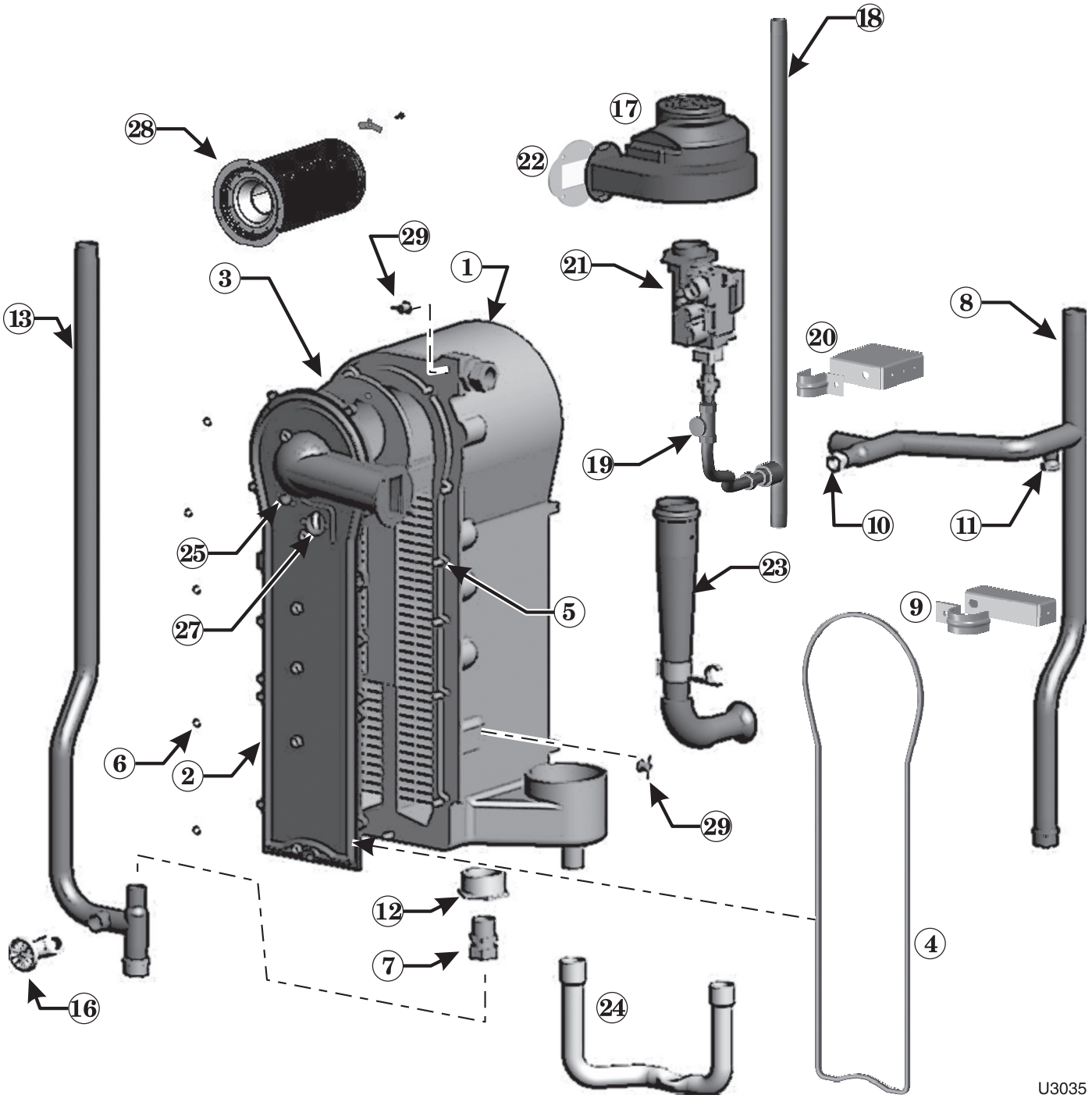

Replacement parts *(continued)*

Figure 108 Heat exchanger and piping — Ultra-310

Item	Description	Boiler Models	Part Number
1	Heat exchanger replacement kit - Heat exchanger, cover plate, burner, electrode, water sensors, compression fittings, condensate fitting, gaskets, and hardware	Ultra-310	383-500-623
2	Cover plate replacement kit - Cover plate, cover plate gasket, burner gasket, and hardware	Ultra-310	383-500-395
3	Cover plate insulation	Ultra-310	383-500-250
4	Cover plate gasket	Ultra-310	383-500-255
5	Cover plate studs, M6, 1 pitch	All	560-340-598
6	Cover plate nuts, M6, 1 pitch	All	561-928-449
8	Supply water pipe assembly - Pipe, temperature well, check valve, cap (assembled) & compression fitting	Ultra-310	383-500-380
10	1/2” NPT well for temperature gauge	All	383-500-270
11	Pressure/temperature gauge check valve	All	383-500-275
13	Return water pipe assembly - Pipe, drain valve, cap (assembled) & compression fitting	Ultra-310	383-500-385
14	Supply/Return water piping square cut EPDM gasket (Ultra-310 only)	Ultra-310	562-248-743
15	Fitting, double nipple for Ultra-310 supply/return	Ultra-310	561-326-828
16	Boiler drain valve, 3/4” NPT	All	511-246-392
17	Blower assembly kit - Blower, gasket, and hardware	Ultra-310	383-500-360
18	Gas pipe	Ultra-310	560-907-679
19	Flexible gas line section and shut-off valve	Ultra-310	560-900-016
20	Gas pipe lower clamp and hardware	Ultra-310	383-500-625
21	Gas valve/venturi kit - Gas valve, venturi, adapter block, O-ring and hardware (assembled) (For LP boilers, make sure to reinstall the existing propane orifice)	Ultra-310	383-500-390
22	Gasket cork, for in between gas valve venturi & burner inlet	All	590-317-310
23	Air silencer kit - Air silencer and gasket	Ultra-310	383-500-355
24	Condensate trap kit - Condensate trap, hose clamps, pvc fittings, and gasket	Ultra-310	383-500-626
25	Ignition electrode kit - Ignition electrode, suppressor, gasket, and hardware	All	383-500-045
26	Ignition cable kit (not shown) - Ignition cable, suppressor, and wire tie	All	383-500-619
27	Inspection glass kit - Bracket, glass, gasket and hardware	All	383-500-020
28	Burner replacement kit - Burner, gaskets and hardware	Ultra-310	383-500-407
29	Return/supply sensor kit - (1) sensor	All	383-500-602

Go to www.weil-mclain.com to locate Weil-McLain distributors

Replacement parts *(continued)*

Figure 109 Heat exchanger and piping — Ultra-310

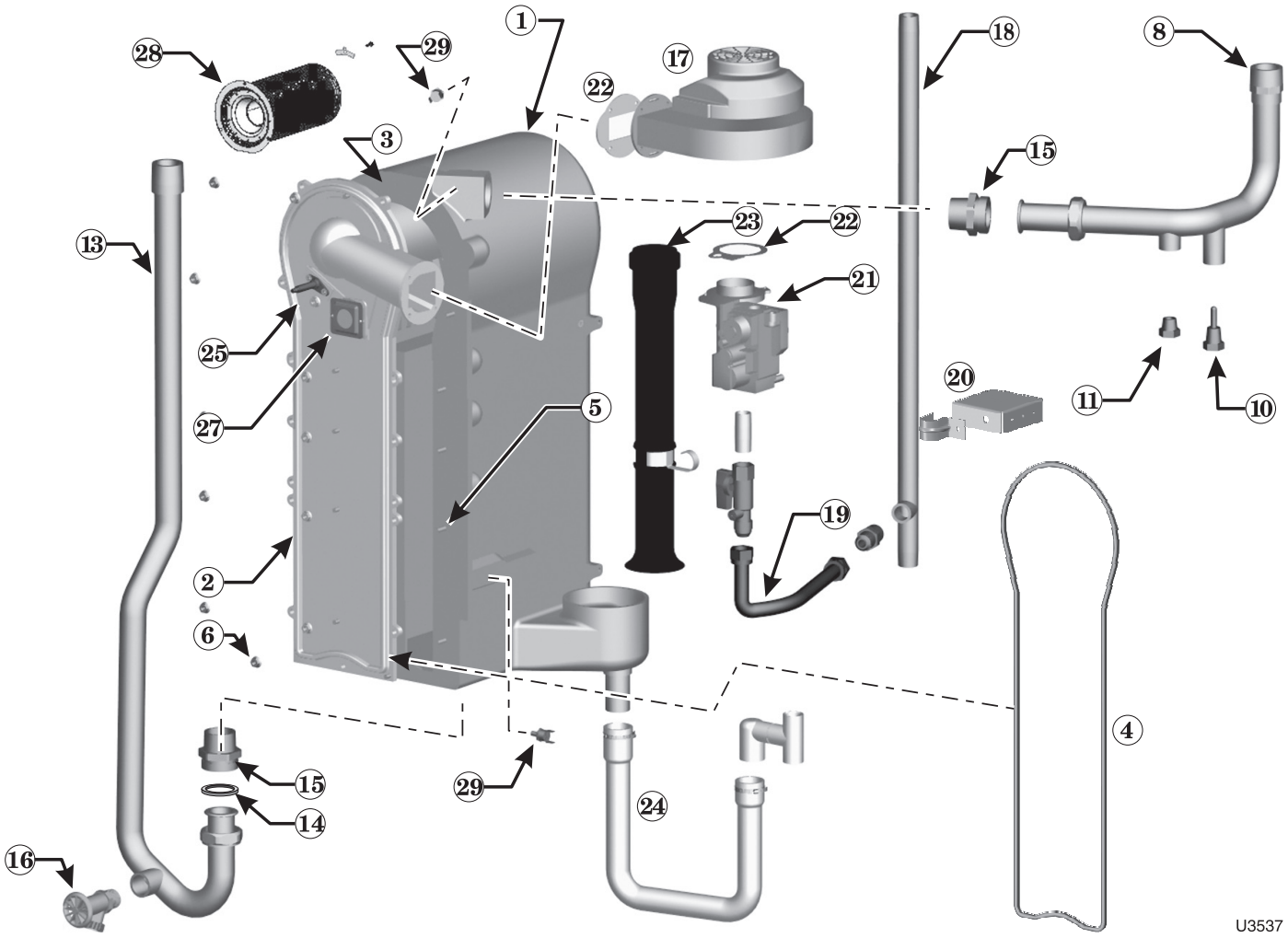

Replacement parts *(continued)*

Figure 110 Controls

Item	Description	Part Number
1	Ultra U-control module	383-500-627
2	Transformer, 120v/24v	383-500-628
3	Display board assembly (includes plastic and display screen)	383-500-629
4	On/off power switch	383-500-205
5	Pressure/temperature gauge assembly (Includes temperature and pressure sensor)	383-500-630
6	Flue temperature sensor replacement kit	383-500-600
7	System temperature sensors (2 required)	383-500-601
8	Outdoor temperature sensor	510-312-218
9	Display to U-control wire harness (not shown)	383-500-633
10	Upper line voltage wire harness (male) (not shown)	383-500-634
11	Lower line voltage wire harness (female) (not shown)	383-500-635
12	Upper low voltage wire harness (male) (not shown)	383-500-636
13	Lower low voltage wire harness (female) (not shown)	383-500-637
14	120 volt, 3-wire receptacle (not shown)	383-500-638
15	Ultra U-control module fuses (not shown) F1 - 3-amp, fast-blow ATO (5 fuses) F2 - 12-amp, slow-blow AG (5 fuses)	383-500-603 383-500-604
16	Jumper for low voltage terminal blocks, (5 jumpers) (not shown)	383-500-641
17	Ultra U-Control terminal block kit, (includes 1 high voltage terminal block, 6 low voltage terminal blocks, and U-control screwdriver) (not shown)	383-500-642
18	24-V LWCO kit with quick connect harness (not shown)	511-100-005

Replacement parts *(continued)*

Figure 111 Controls

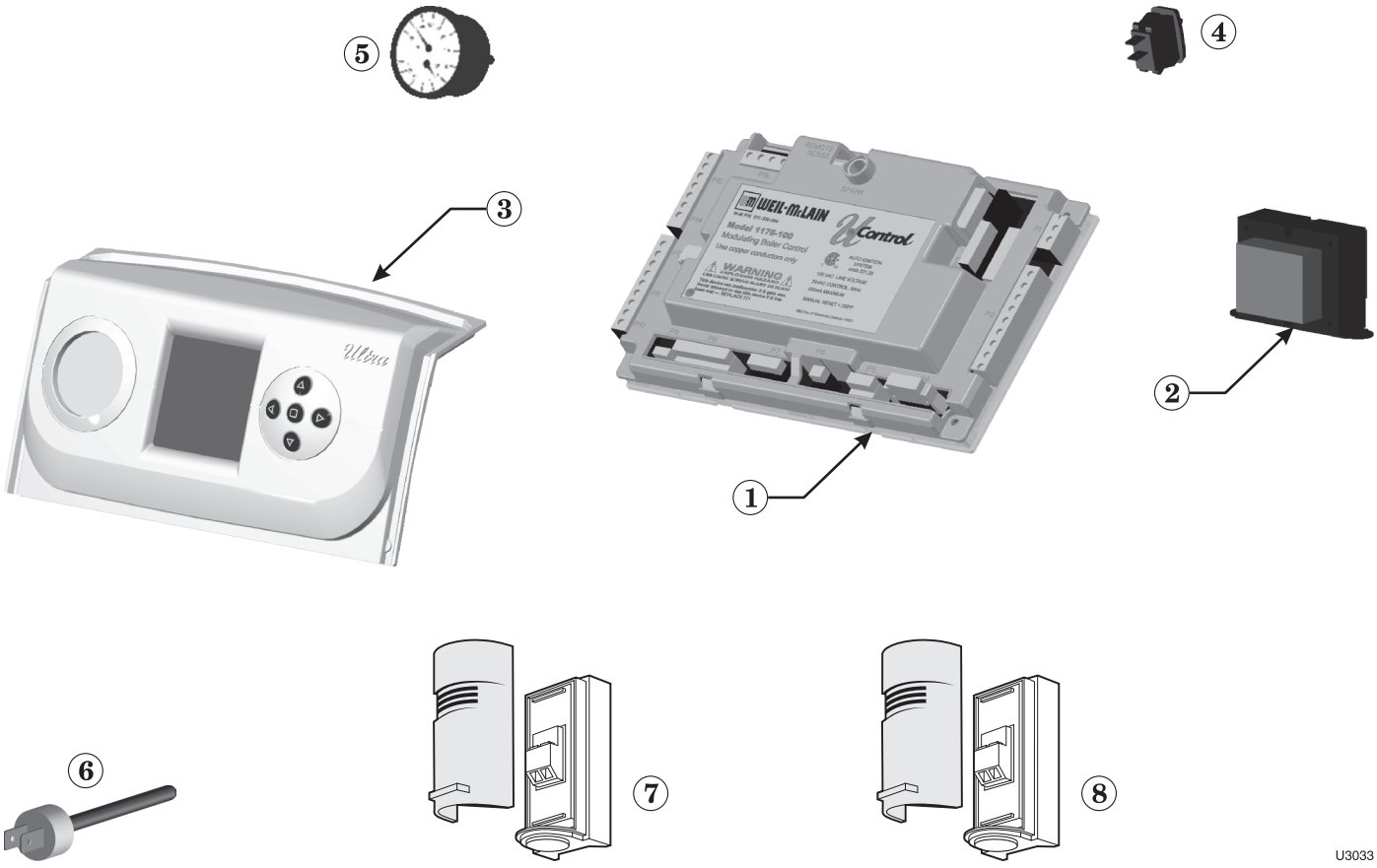

Dimensions

Figure 112 Dimensional data

① Supply connection (*note 1*)

② Return connection (*note 1*)

③ Control panel

④ Electrical entrance openings

⑤ Vent connection:
Ultra-80, -105, -155 — 3"
Ultra-230, -310 — 4"

ALL DIMENSIONS IN INCHES

⑥ Pressure/temperature gauge

⑦ Gas connection (*note 1*)

⑧ Drain valve (inside enclosure)

⑨ Condensate drain (½" PVC)

⑩ Air connection:
Ultra-80, -105, -155 — 3"
Ultra-230, -310 — 4"

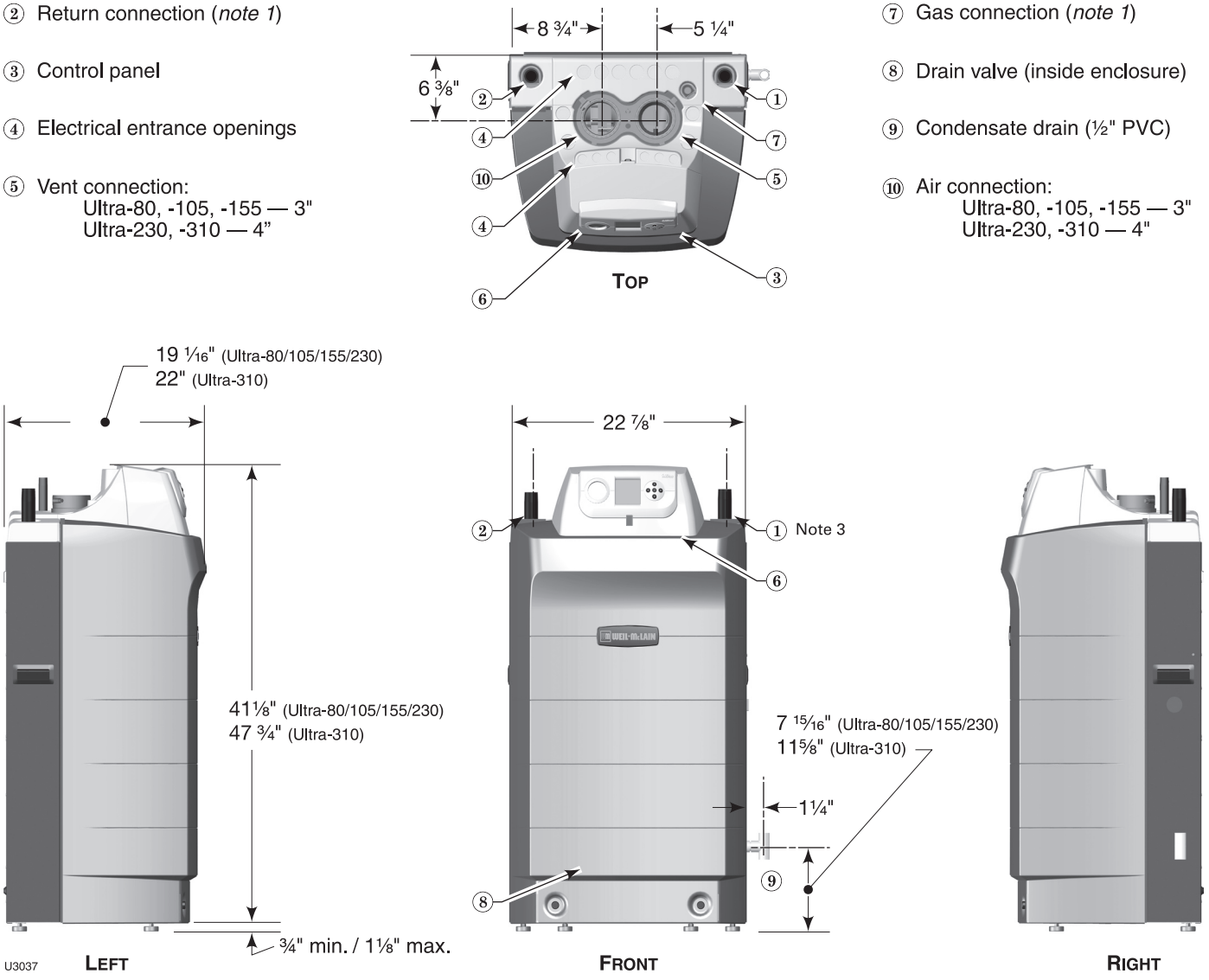

Notes	
1	Boiler supply and return tappings are both 1" NPT (Ultra-80/105/155/230) or 1¼" NPT (Ultra-310). See page 15 for recommended piping sizes. Wall-hung boiler option — water piping and gas pipe can be routed through bottom of enclosure using wall-mounting kit. See page 6 for mounting instructions.
2	Boiler circulator is shipped loose. Circulator must be mounted in the return piping. Both 1" and 1¼" circulator flanges are shipped with boiler on Ultra-80/105/155/230. Both 1¼" and 1½" circulator flanges are shipped with boiler on Ultra-310.
3	Relief valve is shipped loose. See page 14 for mounting details. Relief valve mounts on supply pipe off of supply tee and ¾" street elbow as shown.

Ratings — Ultra boilers

Figure 113 Ratings and engineering data

Boiler Model Number	DOE Heating Capacity	CSA Input	CSA Output	Net I=B=R Ratings	Boiler Water Content	DOE Seasonal Efficiency	Vent/Air Pipe Size
	Btuh *(Note 2)*	Btuh *(Note 7)*	Btuh *(Note 7)*	Btuh *(Note 3)*	Gallons	AFUE, % *(Note 1)*	*(Note 4)*
Ultra-80	71,000	80,000	71,000	62,000	0.69	93.0	2" or 3"
Ultra-105	94,000	105,000	94,000	81,000	0.82	92.0	2" or 3"
Ultra-155	139,0000	155,000	139,000	123,000	1.17	93.0	3" or 4"
Ultra-230	207,000	230,000	207,000	183,000	1.57	92.8	3" or 4"

Boiler Model Number	CSA Input	CSA Gross Output	Net I=B=R Ratings	Boiler Water Content	Combustion Efficiency	Thermal Efficiency	Vent/Air Pipe Size
	Btuh *(Note 7)*	Btuh *(Note 7)*	Btuh *(Note 3)*	Gallons	% (*Note 5)*	% *(Note 6)*	*(Note 4)*
Ultra-310	310,000	289,000	252,000	2.1	93.3	92.9	4"

Notes	
1	As an Energy Star Partner, Weil-McLain has determined that Ultra boilers meet the Energy Star guidelines for energy efficiency.
2	Based on standard test procedures prescribed by the United States Department of Energy.
3	Net I=B=R ratings are based on net installed radiation of sufficient quantity for the requirements of the building and nothing need be added for normal piping and pickup. Ratings are based on a piping and pickup allowance of 1.15. An additional allowance should be made for unusual piping and pickup loads.
4	Ultra boilers must be direct-vented. Ultra boilers require special venting, consistent with Category IV boiler. Use only the vent materials and methods specified in this manual. Ultra-80 and -105 vent/air pipes can be either 2" or 3" pipe. Vent/air pipe length limits for 2" piping are not as long as for 3" piping. Ultra-230 vent/air pipes can be either 3" or 4" pipe. Vent/air pipe length limits for 3" piping are not as long as for 4" piping.
5	Combustion efficiency is based on I=B=R testing procedure BTS-2000, and equal to 100% minus flue loss.
6	Thermal efficiency is based on I=B=R testing procedure BTS-2000.
7	Ratings shown are for sea level applications only. For altitudes from sea level to 5,500 feet above sea level, the Ultra boiler requires no modifications and automatically derates itself by approximately 4% per 1000 feet above sea level. For elevations above 5,500 feet, contact your local Weil-McLain sales office for details.

Ratings — multiple Ultra boilers

Figure 114 Ratings and engineering data (see Figure 116 for notes)

Boilers in system Model Ultra –					Total CSA input	DOE Heating capacity	Boiler H.P.	Net water ratings	Manifolded combustion air duct size	Foundation size			
										Side-to-side arrangement *(height 2" to 4")*		Back-to-back arrangement *(height 2" to 4")*	
					Input, MBH	Output, MBH	-	MBH	Square inches	Length (inches)	Length (inches)	Length (inches)	Length (inches)
80	**105**	**155**	**230**	**310**	-	Note 1	-	Note 2	Figure 31, page 30	Note 3			
2					160	142	4.2	123	80	56	23	27	48
	2				210	188	5.6	163	105				
		2			310	278	8.3	242	155				
			2		460	414	12.4	360	230				
				2	620	578	17.3	503	310				
3					240	213	6.4	185	120	85	23	56	48
	3				315	282	8.4	245	157				
		3			465	417	12.5	363	232				
			3		690	621	18.6	540	345				
				3	930	867	25.9	754	465				
4					320	284	8.5	247	160	114	24	56	49
	4				420	376	11.2	327	210				
		4			620	556	16.6	483	310				
			4		920	828	24.7	720	460				
				4	1240	1156	34.5	1005	320				
5					400	355	10.6	309	200	143	24	85	49
	5				525	470	14.0	409	267				
		5			775	695	20.8	604	387				
			5		1150	1035	30.9	900	575				
				5	1550	1445	43.2	1257	775				
6					480	426	12.7	370	240	172	24	85	49
	6				630	564	16.8	490	315				
		6			930	834	24.9	725	465				
			6		1380	1242	37.1	1080	690				
				6	1860	1734	51.8	1508	930				
7					560	497	14.8	432	280	201	24	114	49
	7				735	658	19.7	572	367				
		7			1085	973	29.1	846	542				
			7		1610	1449	43.3	1260	805				
				7	2170	2023	60.4	1759	585				
8					640	568	17.0	494	320	230	24	114	49
	8				840	752	22.5	654	420				
		8			1240	1112	33.2	967	620				
			8		1840	1656	49.5	1440	920				
				8	2480	2312	69.1	2010	1240				

Ratings — multiple Ultra boilers *(continued)*

Figure 115 Engineering data (see Figure 116 for notes)

Boiler Model Ultra –	Shipping weight	Operating weight	Water content	Water flow rate per boiler		Vent/air pipe size — Provide a separate vent for each boiler	Electrical service required
	Pounds per boiler	Pounds per boiler	Gallons per boiler	GPM @ 20°F rise	GPM @ 40°F rise		Amps per boiler
		Note 4				Note 5	Note 6
80	199	139	0.7	7.1	3.6	2” or 3”	15.0
105	207	145	0.8	9.4	4.7	2” or 3”	15.0
155	234	181	1.2	13.9	7.0	3”	15.0
230	246	192	1.6	20.7	10.4	3” or 4”	15.0
310	297	229	2.0	28.9	14.5	4”	15.0

Figure 116 Notes for Figure 114 and Figure 115

1	Based on standard test procedures outlined by DOE for individual boilers.
2	Net I=B=R ratings are based on piping and pickup allowance of 1.15. Consult Weil-McLain Technical Services for other allowances.
3	Foundation sizes in Figure 114 provide 6 inches between boilers and 2 inches from boiler to edge of foundation. Smaller foundations are possible with reduced service clearances. See page 7 for details. • For side-to-side installations, see Figure 2, page 7. • For back-to-back installations, see Figure 3, page 7.
4	Operating weight is the total weight of the boiler, including water.
5	Ultra-80 and -105 vent/air pipes can be either 2” or 3” pipe. Vent/air pipe length limits for 2” piping are not as long as for 3” piping. Ultra-230 vent/air pipes can be either 3” or 4” pipe. Vent/air pipe length limits for 3” piping are not as long as for 4” piping. All Ultra installations require a separate vent pipe and termination for each boiler. **Vent piping cannot be manifolded**. Install and terminate vents as described in vent/air installation instructions in this manual. Combustion air piping can be individually piped or manifolded. See Figure 31, page 30, for manifolded air piping.
6	Total amp requirement includes up to three circulators, not exceeding 2.2 amps per circulator.

WEIL-McLAIN

Weil-McLain
500 Blaine Street
Michigan City, IN 46360-2388
http://www.weil-mclain.com

Part number 550-100-066/0608