INSTALLATION, OPERATING AND SERVICE INSTRUCTIONS PVCG-B™ SERIES GAS BOILER

ASME H

AHRI CERTIFIED® www.ahridirectory.org

ETL LISTED US Intertek 9700609

BEFORE INSTALLATION: READ THIS MANUAL

SAVE THESE INSTRUCTIONS

Installing contractor and homeowner should read and be informed as to the proper installation and operation of this boiler. The manufacturer will not be responsible for improper installation or operation. This manual and all associated instruction material should be conspicuously posted near the boiler.

For service or repairs to boiler, call your heating contractor. When seeking information on boiler, provide Boiler Model Number and Serial Number as shown on Rating Label.

Part Number	Boiler Serial Number	Installation Date
Heating Contractor		Phone Number
Address		

New Yorker®
RESIDENTIAL HEATING BOILERS

103759-04 - 10/13

Price - $5.00

IMPORTANT INFORMATION - READ CAREFULLY

NOTE: The equipment shall be installed in accordance with those installation regulations enforced in the area where the installation is to be made. These regulations shall be carefully followed in all cases. Authorities having jurisdiction shall be consulted before installations are made.

All wiring on boilers installed in the USA shall be made in accordance with the National Electrical Code and/or local regulations.

The City of New York requires a Licensed Master Plumber supervise the installation of this product.

The Massachusetts Board of Plumbers and Gas Fitters has approved the PVG™ Series boiler. See the Massachusetts Board of Plumbers and Gas Fitters website, **http://license.reg.state.ma.us/pubLic/pl_products/pb_pre_form.asp** for the latest Approval Code or ask your local Sales Representative.

The Commonwealth of Massachusetts requires this product to be installed by a Licensed Plumber or Gas Fitter.

The following terms are used throughout this manual to bring attention to the presence of hazards of various risk levels, or to important information concerning product life.

DANGER

Indicates an imminently hazardous situation which, if not avoided, will result in death, serious injury or substantial property damage.

CAUTION

Indicates a potentially hazardous situation which, if not avoided, may result in moderate or minor injury or property damage.

WARNING

Indicates a potentially hazardous situation which, if not avoided, could result in death, serious injury or substantial property damage.

NOTICE

Indicates special instructions on installation, operation, or maintenance which are important but not related to personal injury hazards.

DANGER

DO NOT store or use gasoline or other flammable vapors or liquids in the vicinity of this or any other appliance.

If you smell gas vapors, NO NOT try to operate any appliance - DO NOT touch any electrical switch or use any phone in the building. Immediately, call the gas supplier from a remotely located phone. Follow the gas supplier's instructions or if the supplier is unavailable, contact the fire department.

Special Installation Requirements for Massachusetts

A. For all side wall horizontally vented gas fueled equipment installed in every dwelling, building or structure used in whole or in part for residential purposes and where the side wall exhaust vent termination is less than seven (7) feet above grade, the following requirements shall be satisfied:

1. If there is no carbon monoxide detector with an alarm already installed in compliance with the most current edition of NFPA 720, NFPA 70 and the Massachusetts State Building Code in the residential unit served by the side wall horizontally vented gas fueled equipment, a battery operated carbon monoxide detector with an alarm shall be installed in compliance with the most current edition of NFPA 720, NFPA 70 and the Massachusetts State Building Code.
2. In addition to the above requirements, if there is not one already present, a carbon monoxide detector with an alarm and a battery back-up shall be installed and located in accordance with the installation requirements supplied with the detector on the floor level where the gas equipment is installed. The carbon monoxide detector with an alarm shall comply with 527 CMR, ANSI/UL 2034 Standards or CSA 6.19 and the most current edition of NFPA 720. In the event that the requirements of this subdivision can not be met at the time of the completion of the installation of the equipment, the installer shall have a period of thirty (30) days to comply with this requirement; provided, however, that during said thirty (30) day period, a battery operated carbon monoxide detector with an alarm shall be installed in compliance with the most current edition of NFPA 720, NFPA 70 and the Massachusetts State Building Code. In the event that the side wall horizontally vented gas fueled equipment is installed in a crawl space or an attic, the carbon monoxide detector may be installed on the next adjacent habitable floor level. Such detector may be a battery operated carbon monoxide detector with an alarm and shall be installed in compliance with the most current edition of NFPA 720, NFPA 70 and the Massachusetts State Building Code.
3. A metal or plastic identification plate shall be permanently mounted to the exterior of the building at a minimum height of eight (8) feet above grade directly in line with the exhaust vent terminal for the horizontally vented gas fueled heating appliance or equipment. The sign shall read, in print size no less than one-half (1/2) inch in size, **"GAS VENT DIRECTLY BELOW. KEEP CLEAR OF ALL OBSTRUCTIONS"**.
4. A final inspection by the state or local gas inspector of the side wall horizontally vented equipment shall not be performed until proof is provided that the state or local electrical inspector having jurisdiction has granted a permit for installation of carbon monoxide detectors and alarms as required above.

B. EXEMPTIONS: The following equipment is exempt from 248 CMR 5.08(2)(a) 1 through 4:

1. The equipment listed in Chapter 10 entitled "Equipment Not Required To Be Vented" in the most current edition of NFPA 54 as adopted by the Board; and
2. Product Approved side wall horizontally vented gas fueled equipment installed in a room or structure separate from the dwelling, building or structure used in whole or in part for residential purposes.

C. When the manufacturer of Product Approved side wall horizontally vented gas equipment provides a venting system design or venting system components with the equipment, the instructions for installation of the equipment and the venting system shall include:

1. A complete parts list for the venting system design or venting system; and
2. Detailed instructions for the installation of the venting system design or the venting system components.

D. When the manufacturer of a Product Approved side wall horizontally vented gas fueled equipment does not provide the parts for venting flue gases, but identifies "special venting systems", the following shall be satisfied:

1. The referenced "special venting system" instructions shall be included with the appliance or equipment installation instructions; and
2. The "special venting systems" shall be Product Approved by the Board, and the instructions for that system shall include a parts list and detailed installation instructions.

E. A copy of all installation instructions for all Product Approved side wall horizontally vented gas fueled equipment, all venting instructions, all parts lists for venting instructions, and/or all venting design instructions shall remain with the appliance or equipment at the completion of the installation.

WARNING

This boiler requires regular maintenance and service to operate safely. Follow the instructions contained in this manual.

Improper installation, adjustment, alteration, service or maintenance can cause property damage, personal injury or loss of life. Read and understand the entire manual before attempting installation, start-up operation, or service. Installation and service must be performed only by an experienced, skilled, and knowledgeable installer or service agency.

This boiler must be properly vented.

This boiler needs fresh air for safe operation and must be installed so there are provisions for adequate combustion and ventilation air.

The interior of the venting system must be inspected and cleaned before the start of the heating season and should be inspected periodically throughout the heating season for any obstructions. A clean and unobstructed venting system is necessary to allow noxious fumes that could cause injury or loss of life to vent safely and will contribute toward maintaining the boiler's efficiency.

Installation is not complete unless a pressure relief valve is installed into the tapping located on top of appliance. - See the Water Piping and Trim Section of this manual for details.

This boiler is supplied with safety devices which may cause the boiler to shut down and not re-start without service. If damage due to frozen pipes is a possibility, the heating system should not be left unattended in cold weather; or appropriate safeguards and alarms should be installed on the heating system to prevent damage if the boiler is inoperative.

This boiler contains very hot water under high pressure. Do not unscrew any pipe fittings nor attempt to disconnect any components of this boiler without positively assuring the water is cool and has no pressure. Always wear protective clothing and equipment when installing, starting up or servicing this boiler to prevent scald injuries. Do not rely on the pressure and temperature gauges to determine the temperature and pressure of the boiler. This boiler contains components which become very hot when the boiler is operating. Do not touch any components unless they are cool.

Boiler materials of construction, products of combustion and the fuel contain alumina, silica, heavy metals, carbon monoxide, nitrogen oxides, aldehydes and/or other toxic or harmful substances which can cause death or serious injury and which are known to the state of California to cause cancer, birth defects and other reproductive harm. Always use proper safety clothing, respirators and equipment when servicing or working nearby the appliance.

Failure to follow all instructions in the proper order can cause personal injury or death. Read all instructions, including all those contained in component manufacturers manuals which are provided with the boiler before installing, starting up, operating, maintaining or servicing.

Keep boiler area clear and free from combustible materials, gasoline and other flammable vapors or liquids.

All cover plates, enclosures and guards must be in place at all times.

NOTICE

This boiler has a limited warranty, a copy of which is included with this boiler. It is the responsibility of the installing contractor to see that all controls are correctly installed and are operating properly when the installation is complete.

TABLE OF CONTENTS

I. Pre-Installation 7

II. Unpack Boiler 8

III. Venting 9

IV. Water Piping and Trim 19

V. Gas Piping 25

VI. Electrical 28

VII. Modular Installation 33

VIII. System Start-up 35

IX. Operation 39

X. Troubleshooting 43

XI. Service 48

XII. Repair Parts 53

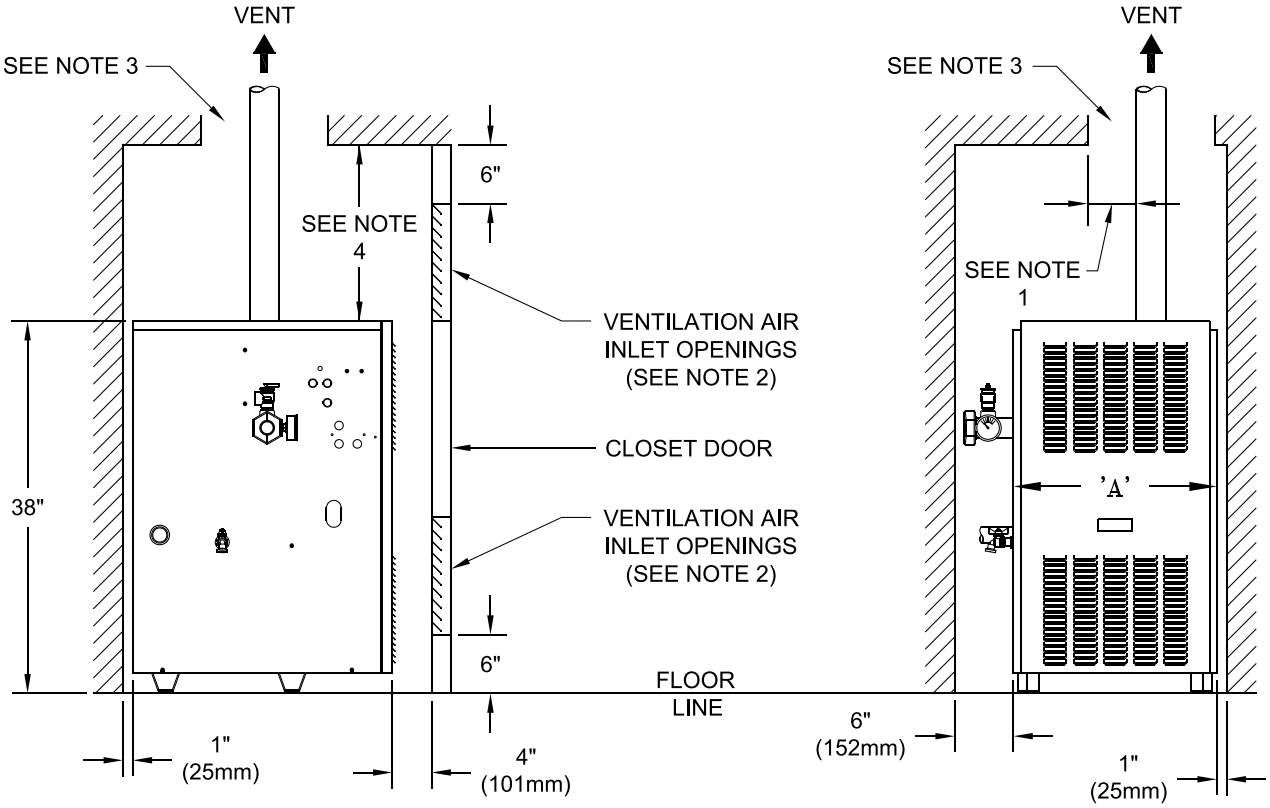

NOTES:

1. VENT PIPE MINIMUM CLEARANCE TO COMBUSTIBLE MATERIAL IS 4" (101mm) WHEN VENT IS INSTALLED IN A FULLY ENCLOSED CHASED APPLICATION OR 3" (76mm) WHEN VENT IS INSTALLED WITH AT LEAST ONE SIDE OPEN, SIMILAR TO A JOIST BAY APPLICATION.
2. AREA OF EACH OPENING, 1 SQ. INCH FOR EACH 1000 BTUH INPUT, WITH MINIMUM OF 100 SQ. INCHES. HEIGHT OF OPENING SHOULD BE HALF THE WIDTH.
3. USE DOUBLE WALL THIMBLE WHEN PENETRATING A COMBUSTIBLE WALL.
4. 18" (457mm) CLEARANCE REQUIRED FOR CLOSET INSTALLATION. 4" (101mm) CLEARANCE REQUIRED FOR OPEN INSTALLATION.

DIMENSIONAL DATA	
MODEL	'A'
PVCG30B	11.65
PVCG40B	14.72
PVCG50B	17.78
PVCG60B	20.84
PVCG70B	23.90
PVCG80B	26.97
PVCG90B	30.03

Figure 1: Minimum Clearances to Combustible Materials

PVCG-B CONNECTION SIZES(DIMENSIONS IN INCHES)				
Model	Supply	Return	Vent	Relief Valve
PVCG30B	1¼ NPT	1¼ NPT	3	¾ NPT
PVCG40B				
PVCG50B				
PVCG60B				
PVCG70B				
PVCG80B			4	
PVCG90B				

PVCG-B DIMENSIONAL DATA	
Model	'A'
PVCG30B	11.65
PVCG40B	14.72
PVCG50B	17.78
PVCG60B	20.84
PVCG70B	23.90
PVCG80B	26.97
PVCG90B	30.03

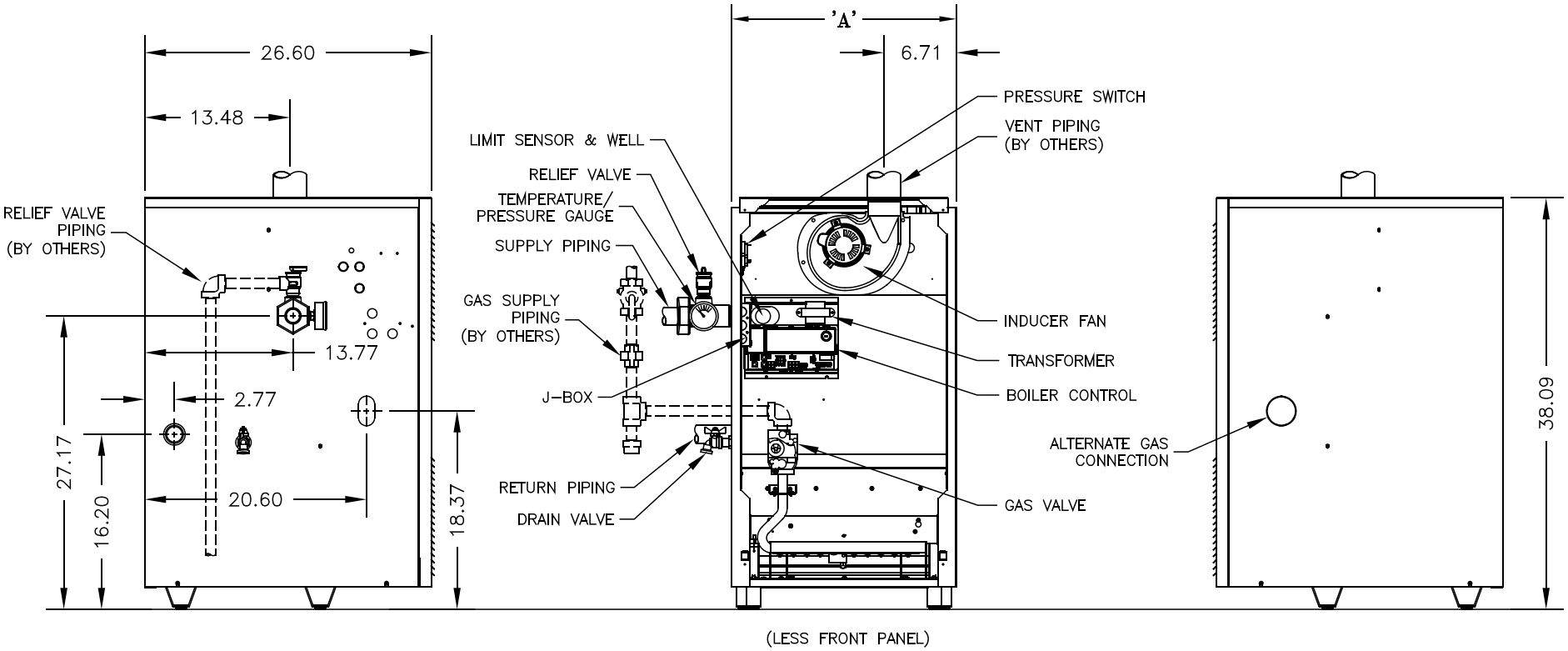

Figure 2: Dimensions

I. PRE-INSTALLATION

WARNING

If you do not follow these instructions exactly, a fire or explosion may result causing property damage or personal injury.

DANGER

Do not install boiler where gasoline or other flammable vapors or liquids, or sources of hydrocarbons (i.e. bleaches, cleaners, chemicals, sprays, paint removers, fabric softeners, etc.) are used or stored.

NOTICE

Due to the low water content of the boiler, mis-sizing of the boiler with regard to the heating system load will result in excessive boiler cycling and accelerated component failure. New Yorker DOES NOT warrant failures caused by mis-sized boiler applications. DO NOT oversize the boiler to the system. Modular boiler installations greatly reduce the likelihood of boiler oversizing.

A. **Installation must conform** to the requirements of the authority having jurisdiction. In the absence of such requirements, installation must conform to the *National Fuel Gas Code*, ANSI Z223.1/NFPA 54.

Where required by authority having jurisdiction, installation must conform to Standard for *Controls and Safety Devices for Automatically Fired Boilers*, ANSI/ASME CSD-1.

B. **Appliance is design certified** for installation on combustible flooring. Do not install boiler on carpeting.

C. **Provide clearance** between boiler jacket and combustible material in accordance with local fire ordinance. Refer to Figure 1 for minimum listed clearance from combustible material. Recommended service clearance is 24 (610 mm) inches from left side, right side and front. Service clearances may be reduced to minimum clearances to combustible materials.

D. **Install on level floor.** For basement installation provide solid base such as concrete, if floor is not level or if water may be encountered on floor around boiler. Floor must be able to support weight of boiler, water and all additional system components.

E. **Protect gas ignition system components** from water (dripping, spraying, rain, etc.) during boiler operation and service (circulator replacement, condensate trap, control replacement, etc.).

F. **Provide combustion and ventilation air** in accordance with the section "Air for Combustion and Ventilation," of the *National Fuel Gas Code*, ANSI Z223.1/NFPA 54, or applicable provisions of local building codes.

WARNING

Adequate combustion and ventilation air must be provided to assure proper combustion.

The following guideline is based on the *National Fuel Gas Code*, ANSI Z223.1/NFPA 54.

1. Determine volume of space (boiler room). Rooms communicating directly with space (through openings not furnished with doors) are considered part of space.

   Volume [ft^3] = Length [ft] x Width [ft] x Height [ft]
2. Determine Total Input of all appliances in space. Round result to nearest 1,000 Btu per hour (Btuh).
3. Determine type of space. Divide Volume by Total Input.
   a. If result is greater than or equal to 50 ft^3 per 1,000 Btuh, space is considered an *unconfined space*.
   b. If result is less than 50 ft^3 per 1,000 Btuh, space is considered a *confined space*.
4. Determine building type. A building of *unusually tight construction* has the following characteristics:
   a. Walls and ceiling exposed to outside atmosphere have a continuous water vapor retarder with a rating of 1 perm or less with openings gasketed and sealed, and;
   b. Weather-stripping has been added on openable windows and doors, and;
   c. Caulking or sealants applied in joints around window and door frames, between sill plates and floors, between wall-ceiling joints, between wall panels, at plumbing and electrical penetrations, and at other openings.
5. For boiler located in an *unconfined space in a building of other than unusually tight construction*, adequate combustion and ventilation air is normally provided by fresh air infiltration through cracks around windows and doors.
6. For boiler located within *unconfined space in building of unusually tight construction* or within *confined space*, provide outdoor air through two permanent openings which communicate directly or by duct with the outdoors or spaces (crawl or attic) freely communicating with the outdoors. Locate one opening within twelve (12) inches of top of space.

Locate remaining opening within twelve (12) inches of bottom of space. Minimum dimension of air opening is three (3) inches. Size each opening per following:

a. Direct communication with outdoors. Minimum free area of one (1) square inch per 4,000 Btu per hour input of all equipment in space.
b. Vertical ducts. Minimum free area of one (1) square inch per 4,000 Btu per hour input of all equipment in space. Duct cross-sectional area shall be same as opening free area.
c. Horizontal ducts. Minimum free area of one (1) square inch per 2,000 Btu per hour input of all equipment in space. Duct cross-sectional area shall be same as opening free area.

   Alternate method for boiler located within confined space. Use indoor air if two permanent openings communicate directly with additional space(s) of sufficient volume such that combined volume of all spaces meet criteria for unconfined space. Size each opening for minimum free area of one (1) square inch per 1,000 Btu per hour input of all equipment in spaces, but not less than 100 square inches.

7. Combustion Air/Ventilation Duct Louvers and Grilles. Equip outside openings with louvers to prevent entrance of rain and snow, and screens to prevent entrance of insects and rodents. Louvers and grilles must be fixed in open position or interlocked with equipment to open automatically before burner operation. Screens must not be smaller than ¼ inch mesh.

   Consider the blocking effect of louvers, grilles and screens when calculating the opening size to provide the required free area. If free area of louver or grille is not known, assume wood louvers have 20-25 percent free area and metal louvers and grilles have 60-75 percent free area.

CAUTION

Avoid operating this boiler in an environment where saw dust, loose insulation fibers, dry wall dust, etc. are present. If boiler is operated under these conditions, the burner interior and ports must be cleaned and inspected daily to insure proper operation.

II. UNPACK BOILER

CAUTION

Do not drop boiler. Do not bump boiler jacket against floor.

A. **Move boiler** to approximate installed position.

B. **Remove all** crate fasteners.

C. **Lift and remove** outside container. Save two of the wooden slats from the container sleeve for use in Steps E and F.

D. **Remove all** boiler hold-down fasteners.

WARNING

Installation of this boiler should be undertaken only by trained and skilled personnel from a qualified service agency.

E. **Tilt the boiler** to its front side or back side and slide a wooden slat under the three raised feet.

F. **Tilt the boiler** in the opposite direction and slide another wooden slat under the three raised feet.

G. **Slide the boiler** left or right off the skid using the two wooden slats as runners.

H. **Move boiler** to its permanent location.

III. VENTING

WARNING

Do not use this boiler with galvanized, Type 304 or Type 316 stainless steel, non metallic or any other non AL29-4C® based vent systems.

Do not use a barometric damper or draft hood with this appliance.

Do not use vent dampers with this boiler.

Moisture and ice may form on surfaces around termination. To prevent deterioration, surfaces should be in good repair (sealed, painted, etc.).

This appliance needs fresh air for safe operation and must be installed so there are provisions for adequate combustion and ventilation air.

Read, understand and follow combustion air instruction restrictions contained in the Pre-Installation instructions of this manual.

Do not operate appliance where gasoline or other flammable vapors or liquids, or sources of hydro-carbons (i.e. bleaches, cleaners, chemicals, sprays, paint removers, fabric softeners, etc.) are used, stored and/or present in the air.

When installing vent pipe through chimney, no other appliance can be vented into the chimney.

Do not exceed maximum vent lengths. Refer to Table 4.

Table 1: Vent System Options

Option	Description	Additional Vent Kit Required	Installation Drawing and Specification (See Section)
1. Horizontal	Power Vent (air from within building) the vent pipe terminates horizontally (through a sidewall).	45° Elbow	D.
2. Vertical	Power Vent (air from within building) the vent pipe terminates vertically (through the roof).	No	E.
3. Horizontal	Power Vent (air from within building) the vent pipe terminates horizontally (snorkel through a side wall)	45° Elbow	F.

Table 2: Vent System Components Included with Boiler

Gasketed Vent System Components	Part Number
Vent Terminal 3” - Horizontal (PVCG30B thru PVCG90B)	8110701
Vent Terminal 4” - Horizontal (PVCG80B & PVCG90B)	8110702

Table 3: Vent System Components

Vent System Component	Part Number	Equivalent Feet of Pipe
3” Dia. Pipe x 1 Ft	8116296U	1
4” Dia. Pipe x 1 Ft	100176-01	
3” Dia. Pipe x 3 Ft	8116298U	3
4” Dia. Pipe x 3 Ft	100177-01	
3” Dia. Pipe x 5 Ft	8116300U	5
4” Dia. Pipe x 5 Ft	100178-01	
3” Dia. Pipe x Adjustable	8116319U	Equal to Installed Length (1.06 TO 1.64)
4” Dia. Pipe x Adjustable	100179-01	
3” Dia. 90° Elbow	8116294U	5
4” Dia. 90° Elbow	100180-01	
3” Dia. 45° Elbow	8116292U	5
4” Dia. 45° Elbow	100181-01	
3” Dia. Horizontal Drain Tee	8116302U	2
4” Dia. Horizontal Drain Tee	100182-01	
3” Dia. Vertical Drain Tee	8116304U	7½
4” Dia. Vertical Drain Tee	100183-01	
3” Single Wall Thimble	8116116	---
4” Single Wall Thimble	100184-01	
3” Double Wall Thimble	103877-01	---
4” Double Wall Thimble	100185-01	

Table 4: Vent Length

Model	3” Vent Pipe (Equiv. Ft.)		4” Vent Pipe (Equiv. Ft.)	
	Min.	Max.	Min.	Max.
PVCG30B & PVCG40B	8	50	---	---
PVCG50B & PVCG60B				
PVCG70B				
PVCG80B & PVCG90B	---	---	8	40

A. Vent Guidelines Due to Removal of an Existing Boiler

IF AN EXISTING BOILER IS REMOVED -

When an existing boiler is removed from a common venting system, the common venting system is likely to be too large for proper venting of the appliances remaining connected to it.

At the time of removal of an existing boiler, the following steps shall be followed with each appliance remaining connected to the common venting system placed in operation, while the other appliances remaining connected to the common venting system are not in operation:

1. Seal any unused openings in the common venting system.
2. Visually inspect the venting system for proper size and horizontal pitch and determine there is no blockage or restriction, leakage, corrosion, and other deficiencies which could cause an unsafe condition.
3. Insofar as is practical, close all building doors and windows and all doors between the space in which the appliances remaining connected to the common venting system are located and other spaces of the building. Turn on clothes dryers and any appliance not connected to the common venting system. Turn on any exhaust fans, such as range hoods and bathroom exhausts, so they will operate at maximum speed. Do not operate a summer exhaust fan. Close fireplace dampers.
4. Place in operation the appliance being inspected. Follow the Lighting (or Operating) Instructions. Adjust thermostat so appliance will operate continuously.
5. Test for spillage at the draft hood relief opening after 5 minutes of main burner operation. Use the flame of a match or candle, or smoke from a cigarette, cigar or pipe.
6. After it has been determined that each appliance remaining connected to the common venting system properly vents when tested as outlined above, return doors, windows, exhaust fans, fireplace dampers and any other gas burning appliance to their previous conditions of use.
7. Any improper operation of the common venting system should be corrected so the installation conforms with the *National Fuel Gas Code*, ANSI Z223.1/NFPA 54. When resizing any portion of the common venting system, the common venting system should be resized to approach the minimum size as determined using the appropriate tables in Chapter 13 of the *National Fuel Gas Code*, ANSI Z223.1/NFPA 54.

B. General Guidelines

1. Vent system installation must be in accordance with *National Fuel Gas Code*, ANSI Z223.1/ NFPA 54 or applicable provisions of local building codes. Contact local building or fire officials about restrictions and installation inspection in your area.
2. This appliance requires a Special Gas Vent.
   a. The product is designed to use New Yorker Boiler supplied AL29-4C® Stainless Steel vent system components. See Table 3 for complete list of New Yorker Vent System Components.
   b. The following manufacturers offer similar AL29-4C® components and are approved for use with this product.
      - Heat-Fab Inc. - Saf-T-Vent (800-772-0739);
      - Flex-L International Inc. - Star-34 (800-561-1980);
      - Z-Flex U. S., Inc. - Z-Vent (800-654-5600);
      - Protech Systems, Inc.- FasNSeal™ (800-766-3473).

      The use of these alternate manufacturer's venting systems will require adapters to connect to the New Yorker supplied vent connector and vent terminal. These adapters are not supplied with this unit and should be obtained from the supplier of the alternate manufacturer's venting system.
   c. Once a vent pipe manufacturer and system is chosen never mix and match vent systems.
   d. Do not use cellular core PVC (ASTM F891), cellular core CPVC, or Radel® (polyphenolsulfone).
   e. Do not cover non-metallic vent pipe and fittings with thermal insulation. Note: Non-metallic vent cannot be used with this boiler.
3. Install venting system in accordance with these instructions. Refer to the appropriate drawings in this section of this manual to determine the proper configuration of venting system. See Table 1.
4. Position venting system to prevent accumulation of condensate. Slope horizontal portions of vent pipe upwards not less than 1/4 in/ft (21 mm/m) from boiler to vent terminal.
5. Use noncombustible ¾ inch pipe strap to support horizontal runs and maintain vent location and slope while preventing sags in pipe. Do not restrict thermal expansion or movement of vent system. Maximum support spacing is five (5) feet (1.5 m). Do not penetrate any part of the vent system with fasteners.
6. Vent length restrictions are based on equivalent length of vent pipe (total length of straight pipe plus equivalent length of fittings). Maximum vent lengths are listed in Table 4. Do not exceed maximum vent lengths. Table 3 lists equivalent lengths for fittings. Do not include vent terminals in equivalent feet calculations.
7. Provide and maintain vent pipe minimum clearances to combustible materials. Vent pipe minimum clearance to combustible material is four (4) inches (102 mm) when vent is installed in a fully enclosed (chase) application or three (3) inches (76 mm) when vent is installed with at least one side open, similar to a joist bay application. Use double wall thimble [New Yorker Part No. 103877-01 (3"), 100185-01 (4")] when penetrating a combustible wall.
8. Do not install venting system components on the exterior of the building except as specifically required by these instructions. The vent termination location is restricted as follows:
   a. Bottom of vent terminal at least twelve (12) inches (300 mm) above grade plus normally expected snow accumulation level.
   b. Minimum three (3) feet (0.3 m) above any forced air inlet located within ten (10) feet (3 m).
   c. Minimum four (4) feet (1.2 m) below, four (4) feet (1.2 m) horizontally from, or 1 foot (300 mm) above any door, operable window, or gravity air inlet into any building.
   d. Minimum clearance from electric meters, gas meters, regulators, and relief equipment is 4 ft (1.22 m) horizontally from and in no case above or below, unless a 4 ft (1.22 m) horizontal distance is maintained.
   e. Minimum twelve (12) inches from overhang or corner of building.
   f. Do not terminate over public walkways or over an area where condensate or vapor could create nuisance or hazard or could be detrimental to the operation of regulators, relief valves, or other equipment.
   g. Minimum 10 feet (2 m) horizontally from an operable opening in an adjacent building. This does not apply to vent terminals 2 feet (0.6 m) or more above or 25 feet (7.6 m) or more below operable openings.
9. Enclose vent passing through occupied or unoccupied spaces above the boiler with material having a fire resistance rating of at least equal to the rating of the adjoining floor or ceiling. Maintain minimum clearances to combustible materials. See Figure 1.

   Note: For one or two family dwellings, fire resistance rating requirement may not need to be met, but is recommended.

10. Plan venting system to avoid possible contact with plumbing or electrical wires. Start at vent connector on top of boiler and work towards vent terminal.
11. If a non-standard length pipe is required:

    Gasketed Vent System: The use of the adjustable length pipe (P/N 8116319U) is recommended to complete a non-standard pipe length. This pipe requires a minimum installed length of 12¾ inch and can adjust across a 7 inch gap up to a maximum of 19¾ inch long. (Note for the adjustable pipe the installed length should be measured from the centerline of the bead on the male end of the first pipe to the end of the female pipe excluding the locking band of the second pipe with a single gasket.) Only in the event the adjustable length pipe is not sufficient a standard length pipe may be cut using the procedure outlined below for the Gasket-Less Vent System.
12. Vent connectors serving appliances vented by natural draft shall not be connected into any portion of mechanical draft systems operating under positive pressure.

WARNING

Never exceed maximum installed length of 19¾ inches for adjustable length pipe.
Risk of flue gas leakage is possible.

NOTICE

Cut must be square with pipe and filed or sanded smooth before joining. Carefully ensure roundness of cut pipe by hand with gloves before installing. Seal joint with RTV specified in this manual.

C. Install Vent Pipe, Gasketed Vent System.

1. Procedure for Joining New Yorker Gasketed Vent Pipe and Fittings. See Figure 3.
   a. Wipe the male end of each joint using an alcohol pad to remove any dirt and grease.
   b. Align weld seams in pipes and use a slight twisting motion to FULLY insert male end into female end of joint. Ensure bead in male end of pipe is below locking band and rest against the end of the female pipe. Verify the factory-installed gasket is not dislodged or cut.
   c. Tighten locking band by HAND with a 5/16" nut driver until snug plus ¼ turn. DO NOT SECURE JOINTS WITH SHEET METAL SCREWS OR POP RIVETS. DO NOT PUNCTURE THE VENT SYSTEM!
   d. Once the installation is complete, operate appliance and inspect all joints to ensure that flue gases and/or liquid condensate will not escape.

D. Separate Horizontal Venting System.

See Figures 4A, 4B and 5. See Figure 28 for Blower Vent Connector Assembly.

Vent Piping –

1. This boiler is supplied with components as standard equipment for installation of the separate horizontal venting system.
2. Do not exceed maximum vent lengths. Refer to Table 4.
3. Recommended horizontal installation consists of vent being sloped down ¼ inch per foot away from boiler. See Figure 4A. See Figure 4B for an alternate horizontal installation.
4. Use appropriate designed thimbles when passing through combustible walls (thimble use optional for noncombustible walls). Insert thimble through wall from outside. Secure outside flange to wall with nails or screws, and seal ID, OD and vent holes with sealant material. Install inside flange to inside wall, secure with nails or screws, and seal with sealant material.
5. For noncombustible wall application when thimble is not used, size opening such that bell with locking band attached cannot pass through.
6. Join vent terminal to vent pipe. See Figure 5.
7. Insert vent pipe through thimble/opening from outside and join to vent system. Apply sealant between vent pipe and opening/thimble to provide weathertight seal and prevent entry of combustion products into building.

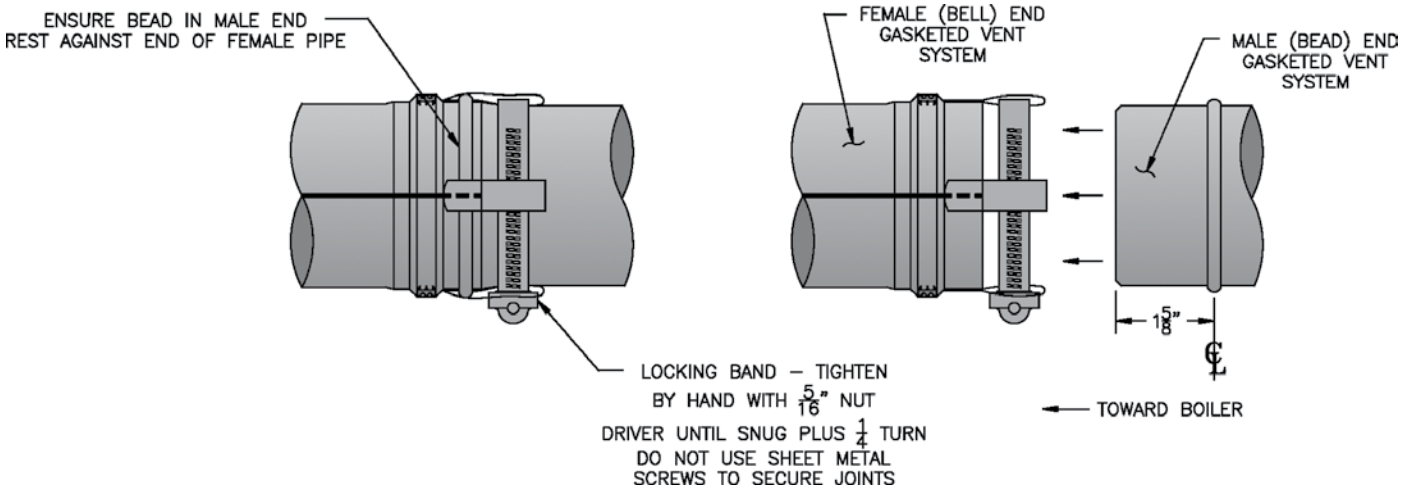

Figure 3: New Yorker Gasketed Vent Joint Detail

III. VENTING (continued)

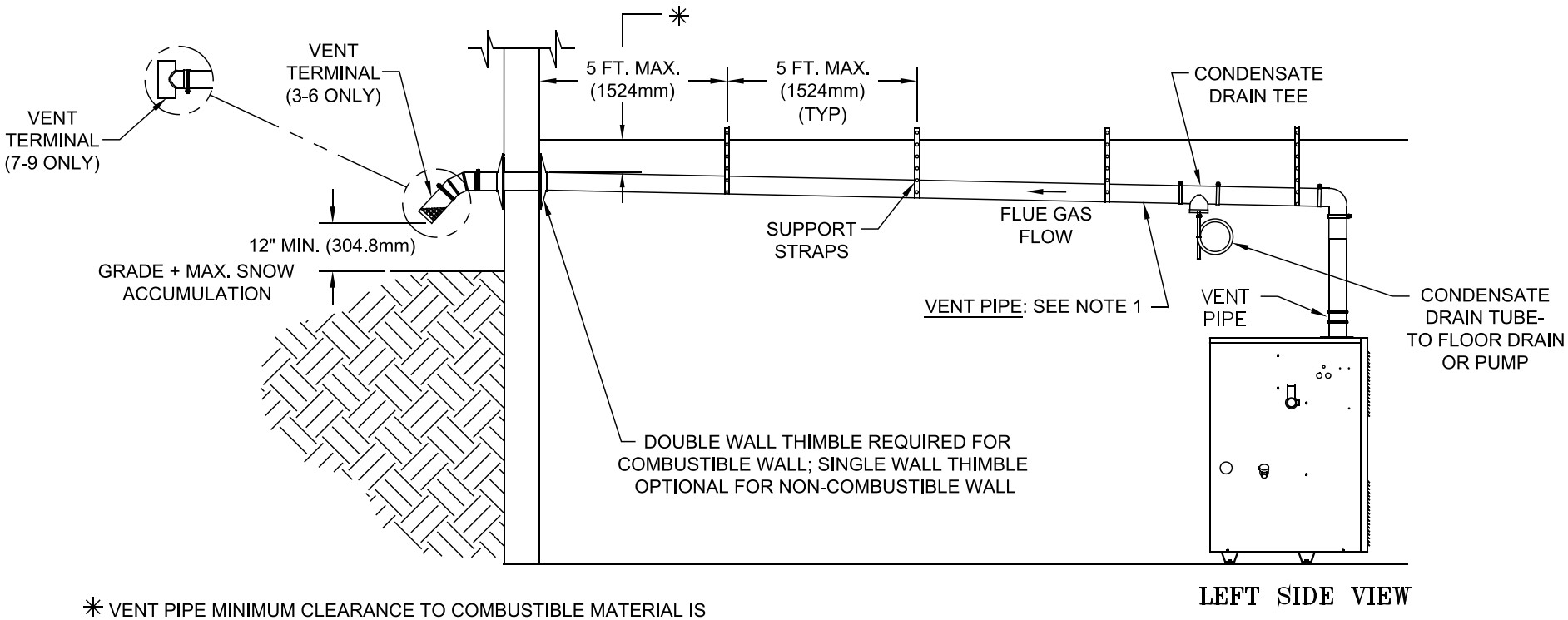

✳ VENT PIPE MINIMUM CLEARANCE TO COMBUSTIBLE MATERIAL IS FOUR (4) INCHES WHEN VENT IS INSTALLED IN A FULLY ENCLOSED (CHASE) APPLICATION OR THREE (3) INCHES WHEN VENT IS INSTALLED WITH AT LEAST ONE SIDE OPEN, SIMILAR TO A JOIST BAY APPLICATION.

NOTE 1:
HORIZONTAL RUNS MUST SLOPE TOWARD THE BOILER 1/4" PER FOOT MIN. WHEN USING A CONDENSATE TEE.

Figure 4: Horizontal – Vent Installation

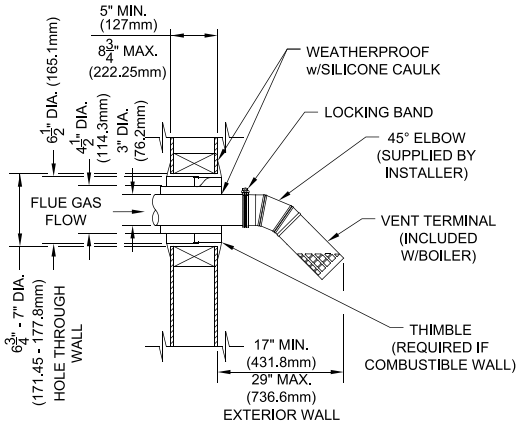

3" HORIZONTAL VENT TERMINAL
3-6 SECTION

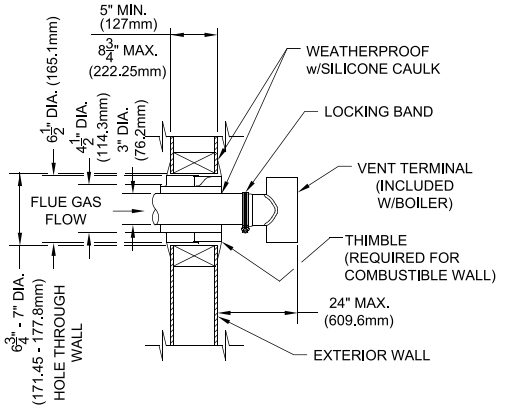

3" HORIZONTAL VENT TERMINAL
7 SECTION

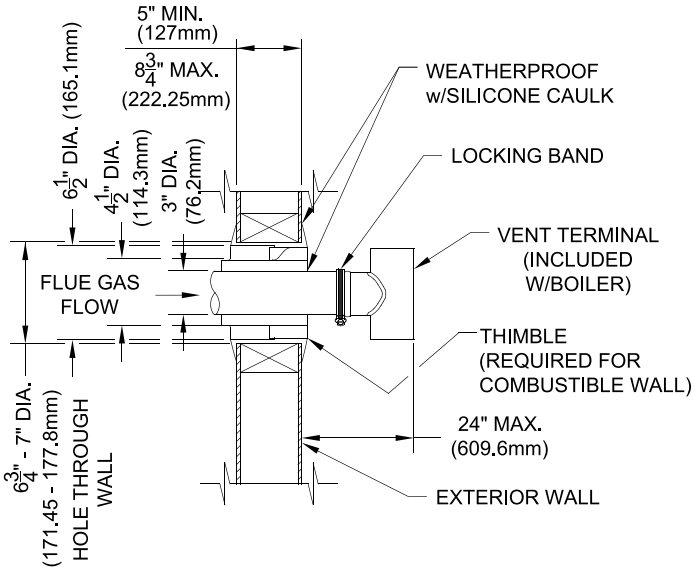

4" HORIZONTAL VENT TERMINAL

Figure 5: Horizontal – Vent Terminal Configuration (3" or 4" Vent)

E. Separate Vertical Venting System - See Figures 6, 7, 8 and 9

NOTICE

Roof penetrations require the use of roof flashing and storm collar - not supplied with boiler.

Vertical Venting –

1. See Figure 28 for Blower Vent Connector Assembly. Do not exceed maximum vent lengths. Refer to Table 4.
2. Installation of a vertical vent drain tee 8116304U is required on all vertical vent applications. See Figures 6 and 7. Attach vertical vent drain tee directly to elbow or horizontal pipe from an elbow immediately after vent connector.
3. Slope horizontal runs minimum ¼ inch per foot. Slope towards vertical vent drain tee. Position weld seams in vent pipes, in all horizontal runs, at the top to avoid condensate from lying on the seams.
4. Install fire stops where vent passes through floors, ceilings or framed walls. The fire stop must close the opening between the vent pipe and the structure.
5. Whenever possible, install vent straight through the roof. Refer to Figure 7 if offset is necessary. Maintain minimum clearance to combustible materials.
6. Install Vent Terminal.
   a. Size roof opening to maintain minimum clearance from combustible materials.
   b. Extend vent pipe to maintain minimum vertical and horizontal distance of twelve (12) inches from roof surface. Allow additional vertical distance for expected snow accumulation. Provide brace as required. Refer to Figure 8.
   c. Install storm collar on vent pipe immediately above flashing. Apply Dow Corning Silastic 732 RTV Sealant between vent pipe and storm collar to provide weathertight seal.
   d. Attach vent terminal.

III. VENTING (continued)

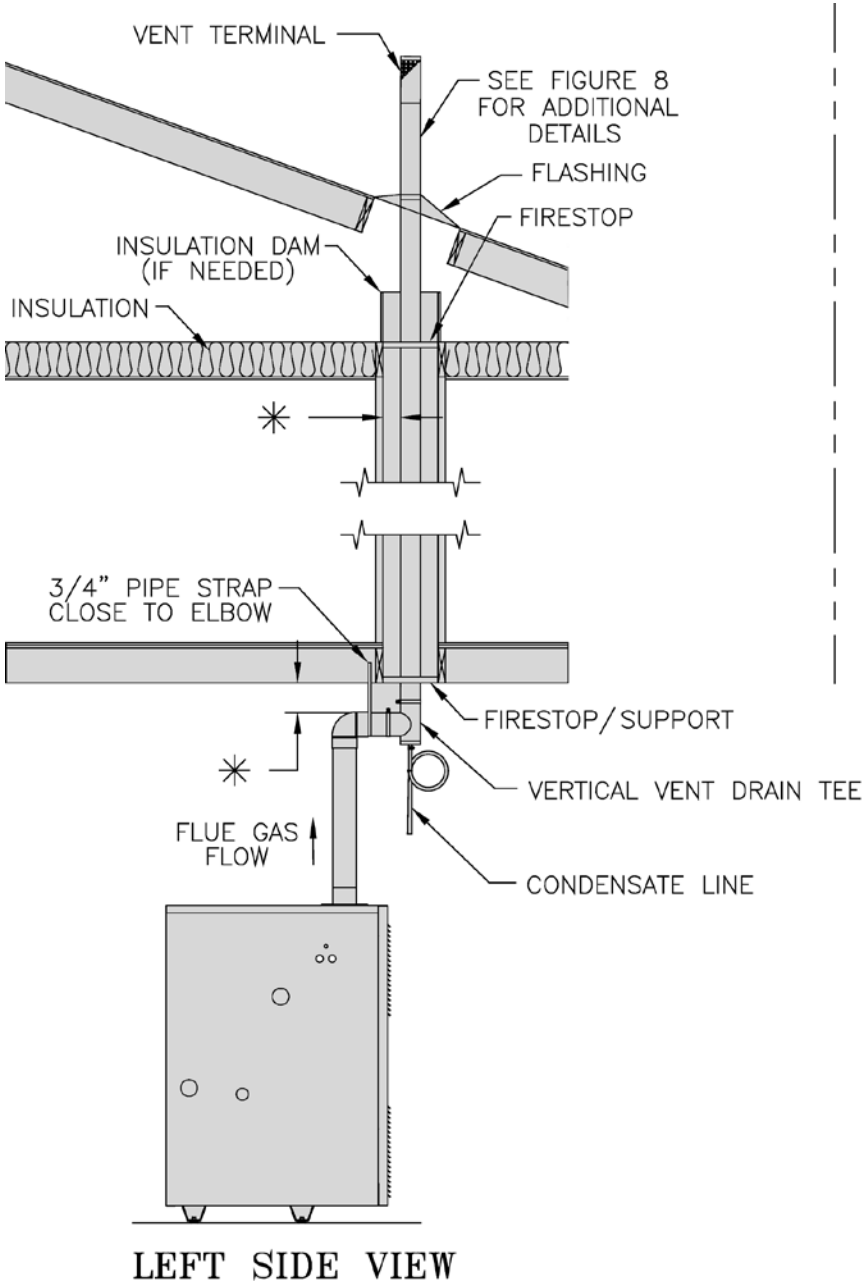

Figure 6: Vertical Vent Installation

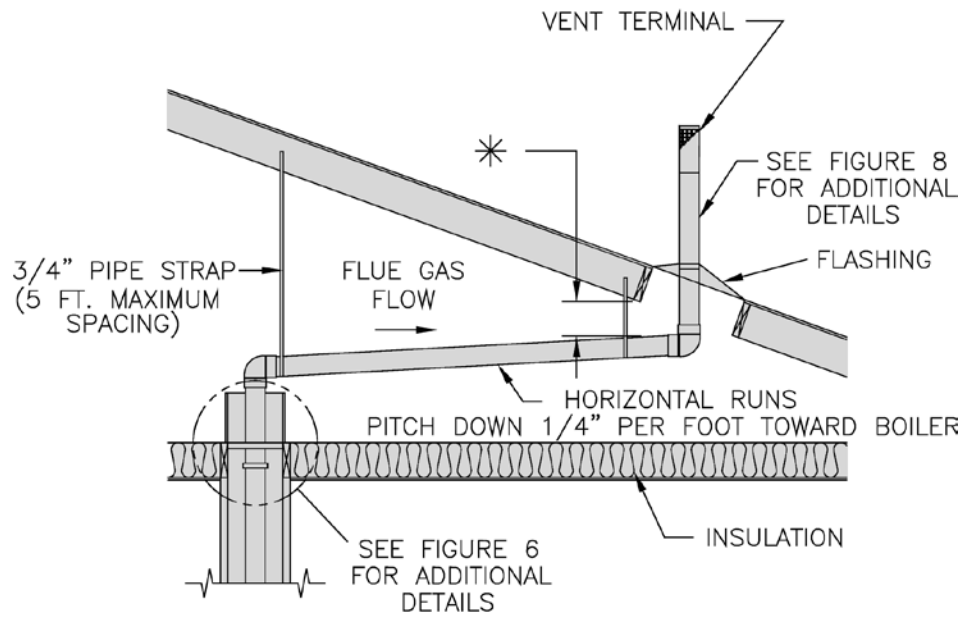

✳ VENT PIPE MINIMUM CLEARANCE TO COMBUSTIBLE MATERIAL IS FOUR (4) INCHES WHEN VENT IS INSTALLED IN A FULLY ENCLOSED (CHASE) APPLICATION OR THREE (3) INCHES WHEN VENT IS INSTALLED WITH AT LEAST ONE SIDE OPEN, SIMILAR TO A JOIST BAY APPLICATION.

Figure 7: Attic Offset

III. VENTING (continued)

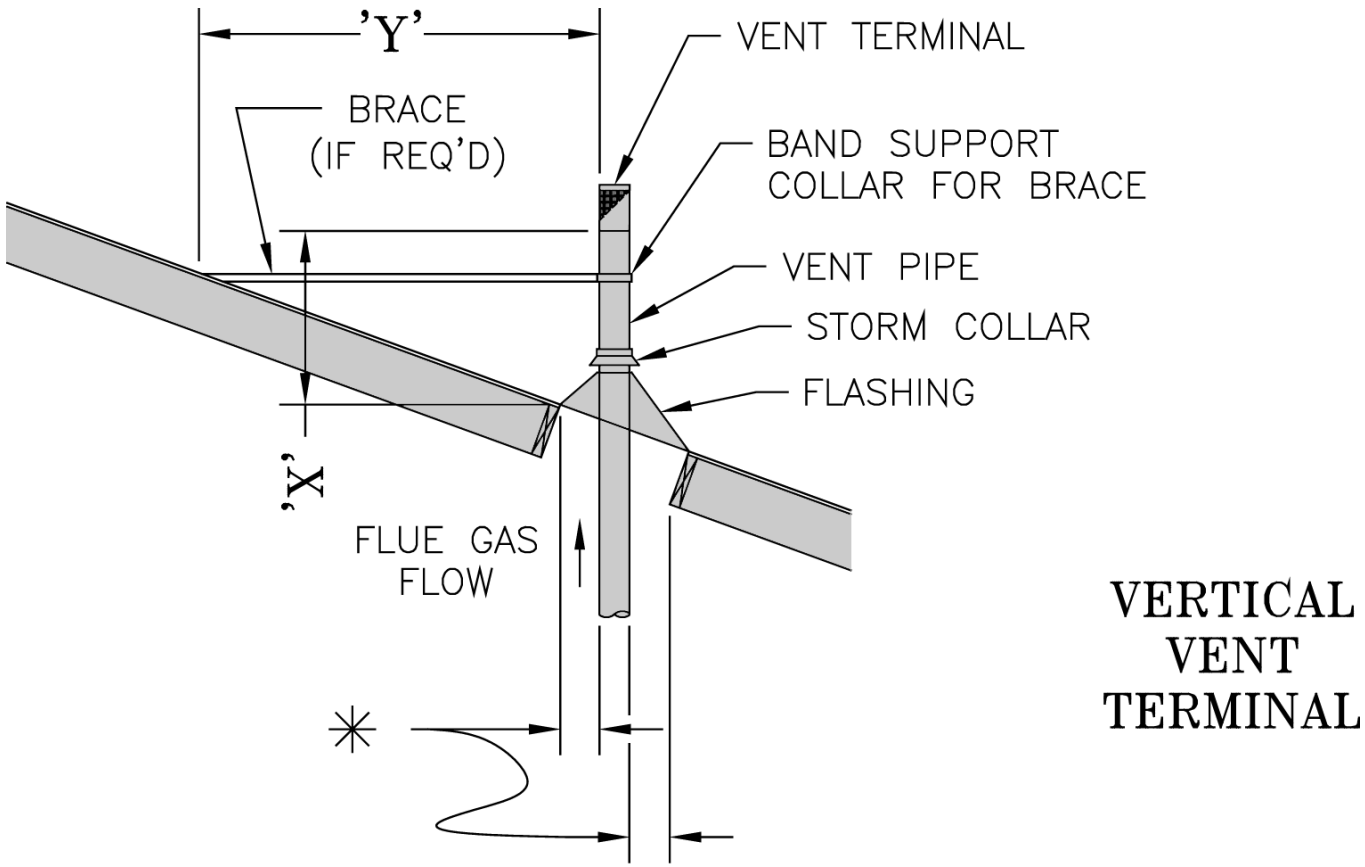

✳ VENT PIPE MINIMUM CLEARANCE TO COMBUSTIBLE MATERIAL IS FOUR (4) INCHES WHEN VENT IS INSTALLED IN A FULLY ENCLOSED (CHASE) APPLICATION OR THREE (3) INCHES WHEN VENT IS INSTALLED WITH AT LEAST ONE SIDE OPEN, SIMILAR TO A JOIST BAY APPLICATION.

Figure 8: Vertical Vent Termination

Extend Vent Piping to maintain minimum vertical ("X") and minimum horizontal ("Y") distance of twelve (12) inches from roof surface. Allow additional vertical ("X") distance for expected snow accumulation.

F. Optional Exterior Separate Horizontal Vent Terminal Mounting – See Figure 9.

1. See Figure 28 for Blower Vent Connector Assembly. Do not exceed maximum vent lengths. Refer to Table 4.
2. This installation will allow a maximum of seven (7) feet vertical exterior run of the vent piping to be installed .

NOTICE

Exterior run to be included in equivalent vent lengths.

3. Install vent piping.
   a. Install vent piping for desired venting system. Refer to specific section for details for vent pipe installation.
   b. After penetrating wall/thimble, install an AL29-4C® 90° elbow so that elbow leg is in the up direction.
   c. Install maximum of seven (7) feet of AL29-4C® vent pipe. Refer to Sections C through E for proper procedures for joining vent pipe and fittings.
   d. Install AL29-4C® 45° elbow to upper AL29-4C® 90° elbow so that leg of 45° is in down direction (see Figure 9).
   f. Install vent terminal.
   g. Brace piping if required.

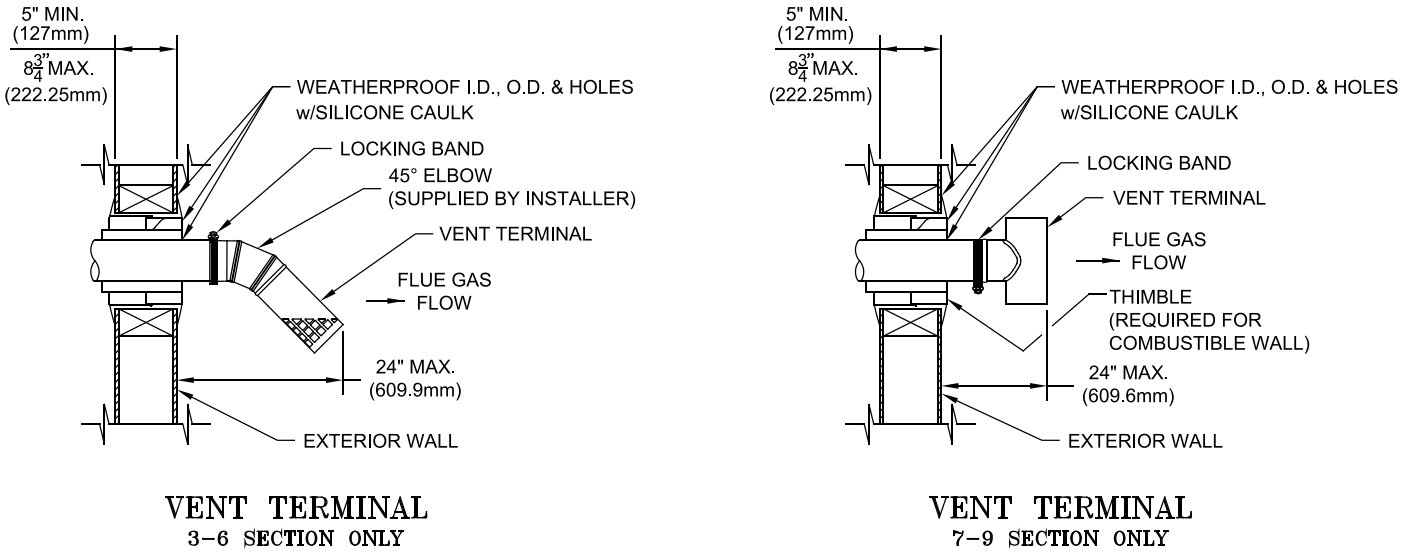

Figure 9: Horizontal Vent Terminal Installation [3" Vent (left view) or 4" Vent (right view)]

IV. WATER PIPING AND TRIM

WARNING

Failure to properly pipe boiler may result in improper operation and damage to boiler or structure.

Oxygen contamination of boiler water will cause corrosion of iron and steel boiler components, and can lead to boiler failure. New Yorker's Standard Warranty does not cover problems caused by oxygen contamination of boiler water or scale (lime) build-up caused by frequent addition of water.

A. Design and install boiler and system piping to prevent oxygen contamination of boiler water and frequent water additions.

1. There are many possible causes of oxygen contamination such as:
   a. Addition of excessive make-up water as a result of system leaks.
   b. Absorption through open tanks and fittings.
   c. Oxygen permeable materials in the distribution system.
2. In order to insure long product life, oxygen sources must be eliminated. This can be accomplished by taking the following measures:
   a. Repairing system leaks to eliminate the need for addition of make-up water.
   b. Eliminating open tanks from the system.
   c. Eliminating and/or repairing fittings which allow oxygen absorption.
   d. Use of non-permeable materials in the distribution system.
   e. Isolating the boiler from the system water by installing a heat exchanger.
   f. Use properly designed and operating air elimination devices in water piping.

B. Optional Probe LWCO Installation

WARNING

DO NOT ATTEMPT to cut factory wires to install an aftermarket Low Water Cut Off (LWCO). Only use connections specifically identified for Low Water Cut Off.

In all cases, follow the Low Water Cut Off (LWCO) manufacturer's instructions.

1. A low water cutoff is required to protect a gas-fired hot water boiler when any connected heat distributor (radiation) is installed below the top of the hot water boiler (i.e. baseboard on the same floor level as the boiler). In addition, some jurisdictions require the use of a LWCO with a hot water boiler as a redundant safety control.

   It is recommended that the LWCO control is installed above the boiler to provide the highest level of protection. However, where the LWCO control is approved by the LWCO control manufacturer for installation in a high boiler tapping of a water boiler, the use of the listed LWCO control is permitted when it is installed according to the LWCO manufacturer's instructions.
2. The recommended location for a LWCO on gas hot water boilers is <u>above</u> the boiler, in the supply piping. The minimum safe water level of a water boiler is at the uppermost top of the boiler; that is, it must be full of water to operate safely.
3. Typically, in residential applications, a probe type LWCO is used instead of a float type, due to their relative costs and the simplicity of piping for a probe LWCO.
4. Piping and fittings required to install LWCO **are field supplied**.

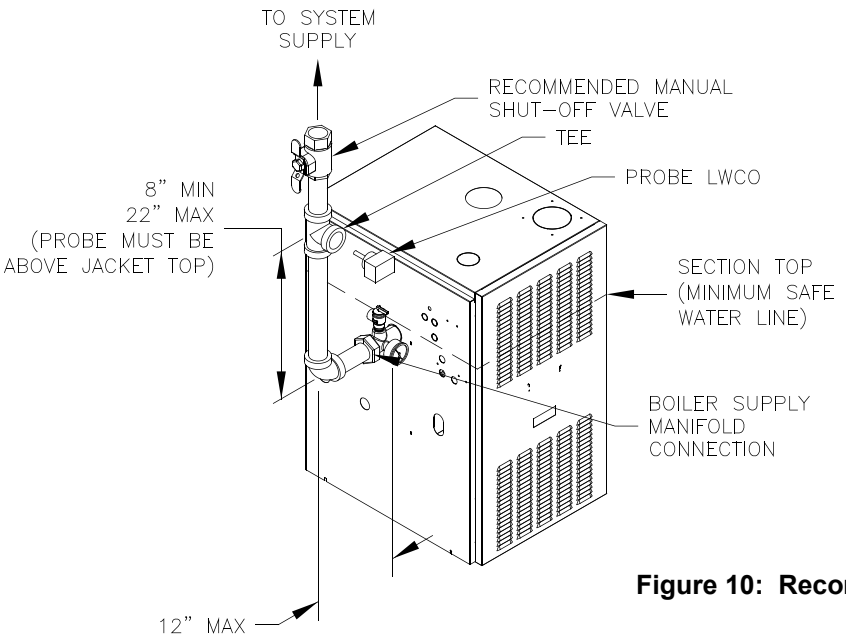

Figure 10: Recommended Probe LWCO Location

5. When constructing a piping tree to install LWCO select fittings (tees, elbows etc) and nipples to have the same size (NPT) as boiler supply connection. At minimum, 1-1/4" tee with ¾" branch outlet is required to connect the probe LWCO to the supply piping. See Figure 10. **DO NOT REDUCE THE SIZE OF NEAR BOILER SUPPLY FITTINGS AND NIPPLES**.
6. Installation of manual shutoff valve located above the LWCO and the boiler is recommended to allow servicing. Thus LWCO probe can be removed for inspection without draining the heating system. An annual inspection of the probe is recommended.
7. The presence of water covering properly installed LWCO probe will cause the normally open contact of the LWCO to close, thus providing continuity of the 24 VAC service to the boiler gas valve. When water level drops below probe, LWCO contact opens up breaking 24V supply to gas valve and preventing the boiler to fire.
8. PVCG-B gas hot water boilers have a "plug-in" provision in factory wiring that will accept optional 24VAC probe LWCO harness connector. The optional LWCO kit (P/N 104083-01) includes 24VAC probe LWCO, Harness and Instructions addressing piping, wiring and testing after installation.

C. Optional Auxiliary Limit Installation

1. Some jurisdictions may require the use of an Auxiliary Limit control with a hot water boiler as a redundant safety control.
2. The recommended location for an Auxiliary Limit on gas hot water boilers is in the supply piping. See Figure 11 for recommended location.
3. Piping and fittings required to install an Auxiliary Limit **are field supplied**.
4. When constructing a piping tree to install an Auxiliary Limit select fittings (tees, elbows etc) and nipples to have the same size (NPT) as boiler supply connection. At minimum, 1-1/4" tee with 1/2" branch outlet is required to install the limit well into the supply piping. See Figure 11. **DO NOT REDUCE THE SIZE OF NEAR BOILER SUPPLY FITTINGS AND NIPPLES**.
5. When boiler water temperature reaches or exceeds Auxiliary Limit setting, the limit normally closed contact will open, thus interrupting the 24 VAC service to the boiler gas valve. When boiler water temperature drops below limit differential, limit contact closes restoring 24V supply to gas valve and allowing the boiler to fire.
6. Gas hot water boilers equipped with Intelligent Hydronic Control have a "plug-in" provision in factory wiring that will accept optional 24VAC Auxiliary Limit harness connector. The optional Auxiliary Limit kit (P/N 103696-01) includes 24VAC Auxiliary Limit, Well, Harness and Instructions addressing wiring and testing after installation.

D. Connect system supply and return piping to boiler. See Figures 14 and 15. Maintain minimum ½ inch (13 mm) clearance from hot water piping to combustible materials.

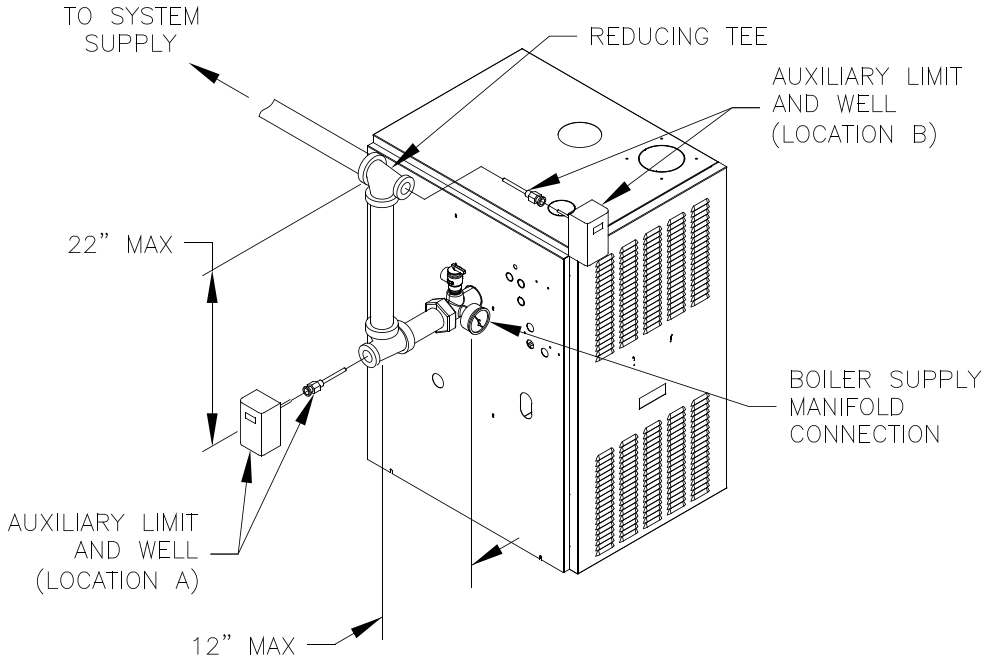

Figure 11: Recommended Auxiliary Limit Location

NOTICE

New Yorker recommends sizing the system circulator to supply sufficient flow (GPM) to allow a 20°F temperature differential in the system. When sizing the system circulator, the pressure drop of all radiators, baseboard and radiant tubing and all connecting piping must be considered.

E. **Install circulator with flanges,** gaskets and bolts provided. Circulator harness allows circulator to be mounted on supply or return. Connect harness to circulator and secure any excess conduit.

F. **Install supply manifold, pressure/temperature gauge and pressure relief valve.**
See Figure 12. Pressure Relief Valve must be installed with spindle in vertical position. Installation of the relief valve must comply with the ASME Boiler and Pressure Vessel Code, Section IV.

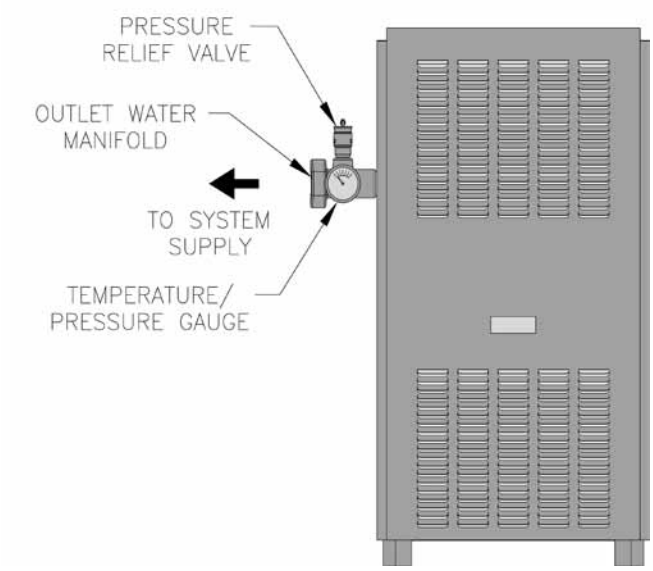

Figure 12: Supply Water Manifold Piping

WARNING

Pressure relief valve discharge piping must be piped such that the potential of severe burns is eliminated. DO NOT pipe in any area where freezing could occur. DO NOT install any shut-off valves, plugs or caps. Consult Local Codes for proper discharge piping arrangement.

G. **Space heating and domestic water heating** with Link SL™ water heater. Install Link SL™ water heater as a separate heating zone. Refer to Link SL™ Installation, Operating and Service Instructions for additional information.

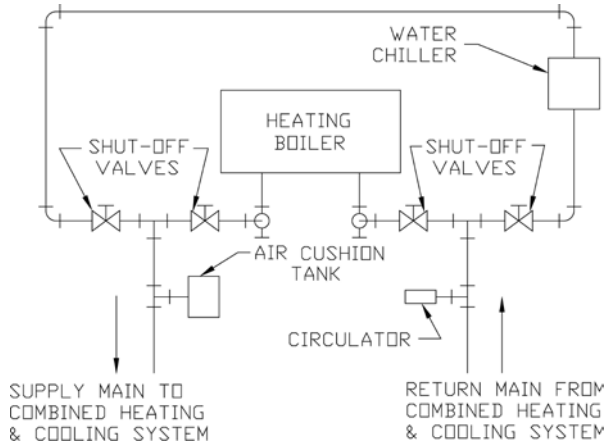

Figure 13: Recommended Piping for Combination Heating & Cooling (Refrigeration) System

H. **If boiler is used in connection with refrigeration systems**, boiler must be installed with chilled medium piped in parallel with the heating boiler using appropriate valves to prevent chilled medium from entering boiler. See Figure 13.

I. **If boiler is connected to heating coils** located in air handling units where they may be exposed to refrigerated air circulation, boiler piping must be equipped with flow control valves or other automatic means to prevent gravity circulation of boiler water during the cooling cycle.

J. **Use a boiler bypass** if the boiler is to be operated in a system which has a large volume or excessive radiation where low boiler water temperatures may be encountered (i.e. converted gravity circulation system, etc.).

Install pipe tee between circulator and boiler return along with second tee in supply piping as shown in Figure 14 or 15. Bypass should be same size as the supply and return lines with valves located in bypass and supply outlet as illustrated in Figure 14 or 15 in order to regulate water flow to maintain higher boiler water temperatures.

After the boiler is operational (reference Section VIII. System Start-Up) set by-pass and boiler supply valves to half throttle position to start. Operate boiler until system water temperature reaches normal operating range.

Adjust valves to provide 180° to 200°F supply water temperature. Opening the boiler supply valve will raise system temperature, while opening the by-pass valve will lower system supply temperature.

K. **After the boiler and system have been cleaned and flushed,** and before refilling the entire system add appropriate water treatment chemicals, if necessary, to bring the pH between 7 and 11.

L. **If it is required to perform a long term pressure test of the hydronic system**, the boiler should first be isolated to avoid a pressure loss due to the escape of air trapped in the boiler.

To perform a long term pressure test including the boiler, ALL trapped air must first be removed from the boiler.

A loss of pressure during such a test, with no visible water leakage, is an indication that the boiler contained trapped air.

IV. WATER PIPING AND TRIM (continued)

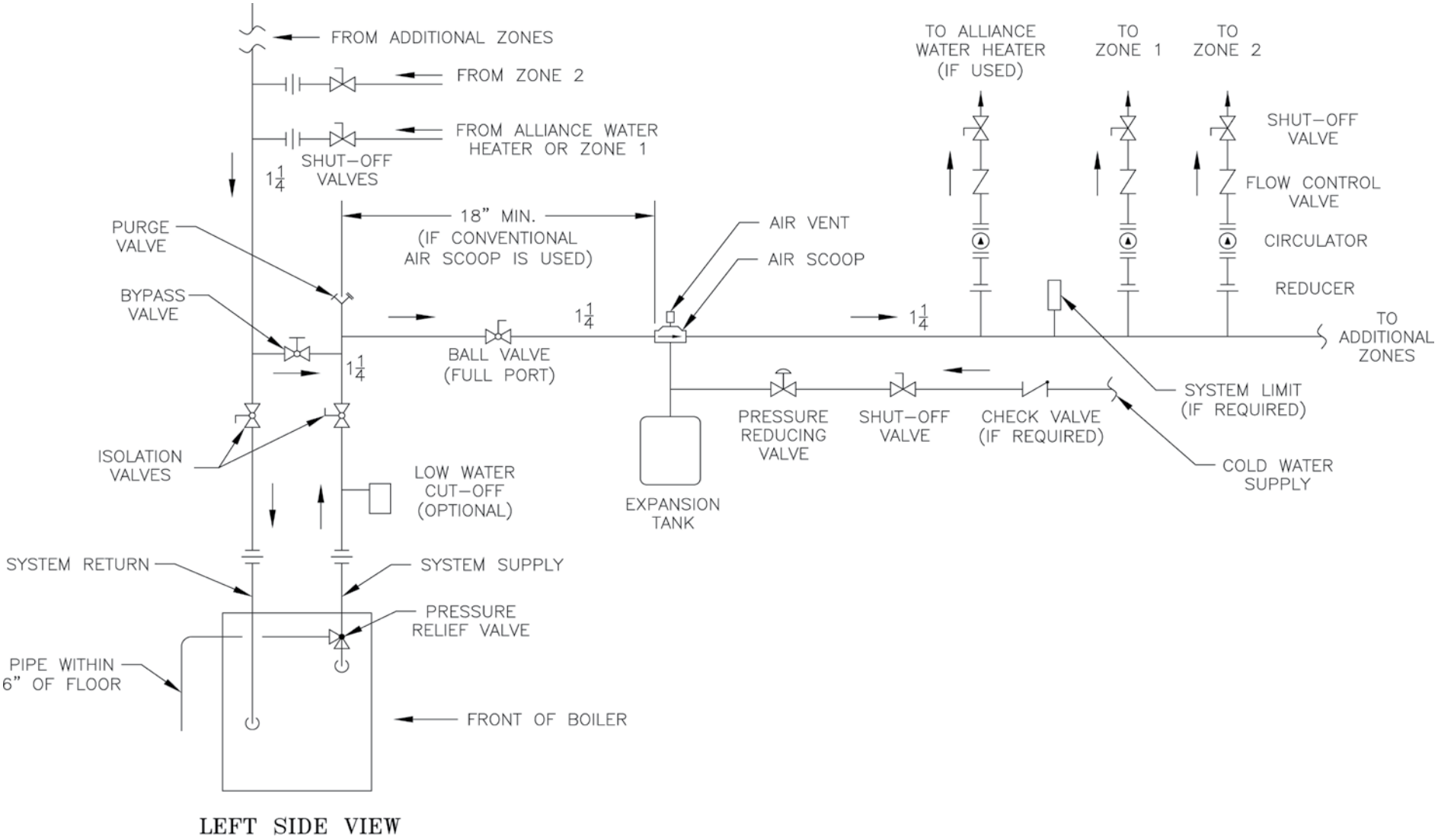

Figure 14: Recommended Boiler Piping For Circulator Zoned Heating Systems

IV. WATER PIPING AND TRIM (continued)

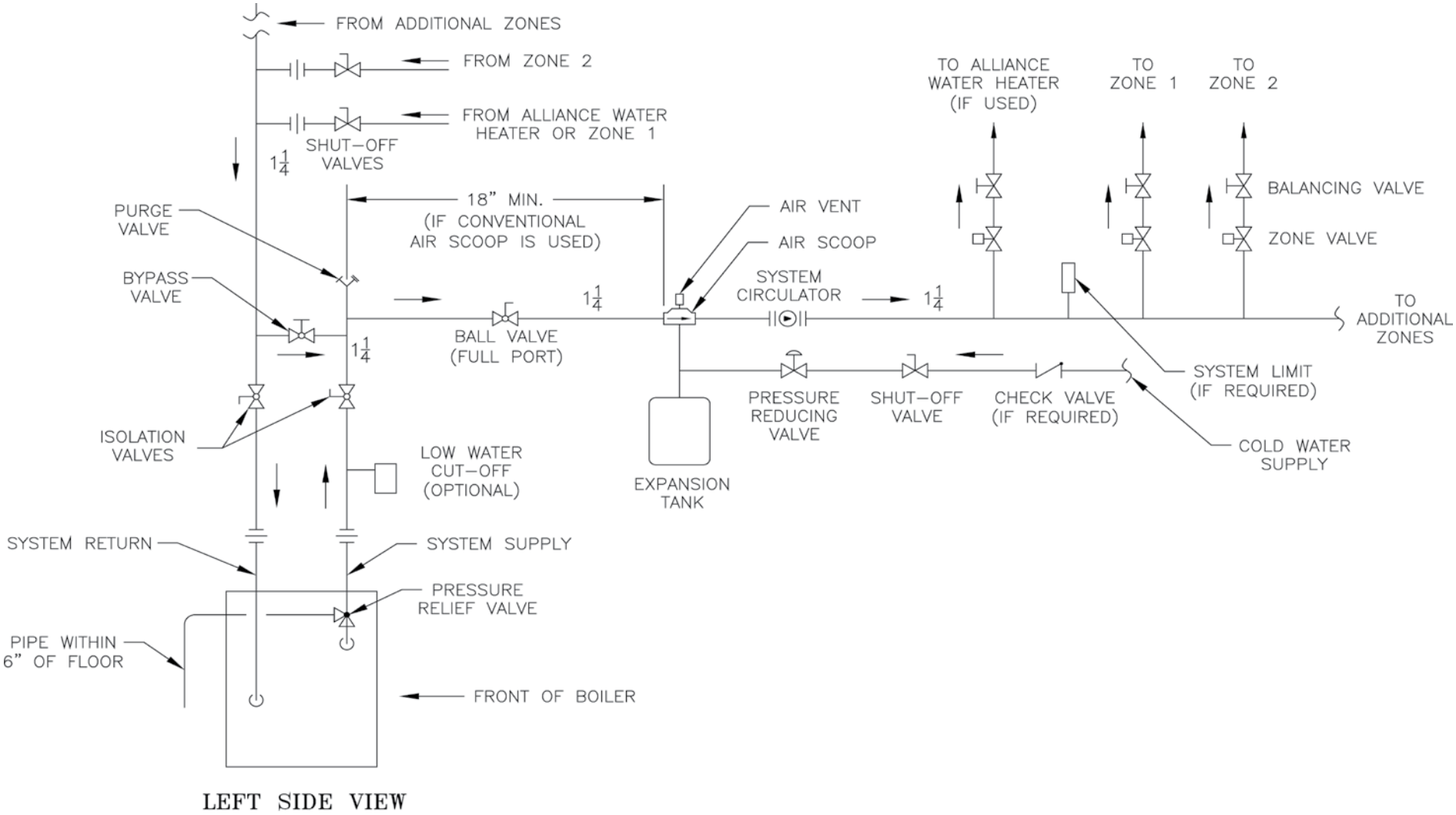

Figure 15: Recommended Water Piping for Zone Valve Zoned Heating Systems

V. GAS PIPING

WARNING

Failure to properly pipe gas supply to boiler may result in improper operation and damage to the boiler or structure. Always assure gas piping is absolutely leak free and of the proper size and type for the connected load.

An additional gas pressure regulator may be needed. Consult gas supplier.

A. Size gas piping. Design system to provide adequate gas supply to boiler. Consider these factors:

1. Allowable pressure drop from point of delivery to boiler. Maximum allowable system pressure is ½ psig. Actual point of delivery pressure may be less; contact gas supplier for additional information. Minimum gas valve inlet pressure is stamped on the rating label located in the boiler's vestibule compartment.
2. Maximum gas demand. Refer to the boiler's input as printed on its rating label. Also consider existing and expected future gas utilization equipment (i.e. water heater, cooking equipment).
3. Length of piping and number of fittings. Refer to Table 7 for maximum capacity of Schedule 40 pipe. Table 8 lists equivalent pipe length for standard fittings.
4. Corrections for the specific gravity of natural gas can be found in Table 6.

Table 6: Specific Gravity Correction Factors for Natural Gas

Specific Gravity	Correction Factor	Specific Gravity	Correction Factor
---	---	0.85	0.81
---	---	0.90	0.82
0.60	1.00	1.00	0.78
0.65	0.96	1.10	0.74
0.70	0.93	1.20	0.71
0.75	0.90	1.30	0.68
0.80	0.87	1.40	0.66

For materials or conditions other than those listed above, refer to *National Fuel Gas Code*, ANSI Z223.1 /NFPA54, or size system using standard engineering methods acceptable to authority having jurisdiction.

Table 5: Gas Ratings

Model	Natural/LP Maximum Gas Pressure (in. w.c.)	Natural Minimum Gas Pressure (in. w.c.) Inlet to Gas Valve	LP Minimum Gas Pressure (in. w.c.) Inlet to Gas Valve	Natural Manifold Pressure (in. w.c.)	LP Manifold Pressure (in. w.c.)
PVCG30B	14	4.5	11.5	3.5	10.0
PVCG40B					
PVCG50B					
PVCG60B					
PVCG70B					
PVCG80B					
PVCG90B					

V. GAS PIPING (continued)

Table 7: Maximum Capacity of Schedule 40 Pipe in CFH* For Natural Gas Pressures of 0.5 psig or Less

Length [Feet]	0.3 inch w.c. Pressure Drop				0.5 inch w.c. Pressure Drop			
	½	¾	1	1¼	½	¾	1	1¼
10	132	278	520	1,050	175	360	680	1,400
20	92	190	350	730	120	250	465	950
30	73	152	285	590	97	200	375	770
40	63	130	245	500	82	170	320	660
50	56	115	215	440	73	151	285	580
60	50	105	195	400	66	138	260	530
70	46	96	180	370	61	125	240	490
80	43	90	170	350	57	118	220	460
90	40	84	160	320	53	110	205	430
100	38	79	150	305	50	103	195	400

*** 1 CFH of Natural Gas is approximately equal to 1 MBH.**
Contact your gas supplier for the actual heating value of your gas.

B. Connect boiler gas valve to gas supply system.

WARNING

Failure to use proper thread compounds on all gas connectors may result in leaks of flammable gas.

WARNING

Gas supply to boiler and system must be absolutely shut off prior to installing or servicing boiler gas piping.

1. Use methods and materials in accordance with local plumbing codes and requirements of gas supplier. In absence of such requirements, follow *National Fuel Gas Code*, ANSI Z223.1 /NFPA 54.
2. Use thread (joint) compounds (pipe dope) resistant to action of liquefied petroleum gas.
3. Install sediment trap, ground-joint union and manual shut-off valve upstream of boiler gas control valve and outside jacket. See Figure 16.
4. All above ground gas piping upstream from manual shut-off valve must be electrically continuous and bonded to a grounding electrode. Do not use gas piping as grounding electrode. Refer to *National Electrical Code*, ANSI/NFPA 70.

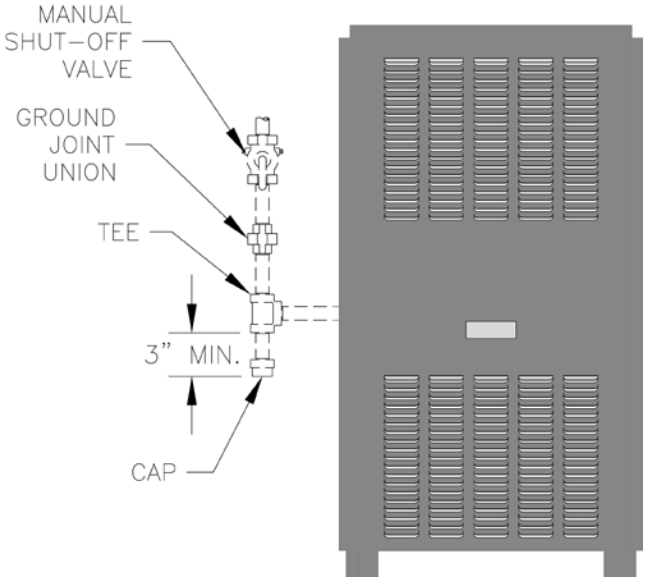

Figure 16: Recommended Gas Piping

Table 8: Equivalent Lengths of Standard Pipe Fittings & Valves

VALVES FULLY OPEN									
Pipe Size	I.D. Inches	Gate	Globe	Angle	Swing Check	90° Elbow	45° Elbow	90° Tee, Flow Through Run	90° Tee, Flow Through Branch
½"	0.622	0.35	18.6	9.3	4.3	1.6	0.78	1.0	3.1
¾"	0.824	0.44	23.1	11.5	5.3	2.1	0.97	1.4	4.1
1"	1.049	0.56	29.4	14.7	6.8	2.6	1.23	1.8	5.3
1¼"	1.380	0.74	38.6	19.3	8.9	3.5	1.60	2.3	6.9

C. Pressure test. The boiler and its gas connection must be leak tested before placing boiler in operation.

1. Protect boiler gas control valve. For all testing over ½ psig, boiler and its individual shutoff valve must be disconnected from gas supply piping. For testing at ½ psig (3.5kPa) or less, isolate boiler from gas supply piping by closing boiler's individual manual shutoff valve.
2. Locate leaks using approved combustible gas detector, soap and water, or similar nonflammable solution.

DANGER

Do not use matches, candles, open flames or other ignition source to check for leaks.

VI. ELECTRICAL

DANGER

Positively assure all electrical connections are unpowered before attempting installation or service of electrical components or connections of the boiler or building. Lock out all electrical boxes with padlock once power is turned off.

WARNING

Failure to properly wire electrical connections to the boiler may result in serious physical harm.

Electrical power may be from more than one source. Make sure all power is off before attempting any electrical work.

Each boiler must be protected with a properly sized over-current device.

Never jump out or make inoperative any safety or operating controls.

The wiring diagrams contained in this manual are for reference purposes only. Each boiler is shipped with a wiring diagram attached to the front door. Refer to this diagram and the wiring diagram of any controls used with the boiler. Read, understand and follow all wiring instructions supplied with the controls.

A. **General.** Install wiring and electrically ground boiler in accordance with authority having jurisdiction or, in the absence of such requirements, follow the *National Electrical Code*, ANSI/NFPA 70.

B. **A separate electrical circuit must be** run from the main electrical service with an over-current device/disconnect in the circuit. A service switch is recommended and may be required by some local jurisdictions. Install the service switch in the line voltage "Hot" leg of the power supply. Locate the service switch such that the boiler can be shut-off without exposing personnel to danger in the event of an emergency. Connect the main power supply and ground to the three (3) boiler wires (black, white and green) located in the junction box at the inside top of the boiler jacket.

C. INSTALL A ROOM THERMOSTAT on an inside wall about four feet above floor. Never install thermostat on an outside wall or where it will be influenced by drafts, hot or cold water pipes, lighting fixtures, television, rays of the sun or near a fireplace. Keep large furniture away from thermostat so there will be free movement of room air around this control. Heat Anticipator in Thermostat should be set to 0.6 amp. If system tends to overheat above the thermostat's temperature setting, reduce heat anticipator setting by .1 or .2 amps. If system tends to short cycle without reaching desired room temperature, increase heat anticipator setting by .1 or .2 amps.

D. For zone valve wiring, a separate 24V transformer is required rather than attempting to use the boiler mounted control. Consult zone valve manufacturer for assistance.

WARNING

The combined boiler and circulator amperage must not exceed 15 amps.
Install over-current protection in accordance with authority having jurisdiction or, in the absence of such requirements, follow the National Electric Code, NFPA 70, and/or CSA C22.1 Electrical Code. Do not provide over-current protection greater than 15 amperes.

E. **Refer to** Figures 17 and 18 for details on the internal boiler wiring.

NOTICE

This boiler is equipped with a high water temperature limit rated sensor located inside the internal wiring of the boiler. This limit provides boiler shutdown in the event the boiler water temperature exceeds the set point of the limit control. Certain Local Codes require an additional water temperature limit. In addition, certain types of systems may operate at temperatures below the minimum set point of the limit contained in the boiler.

If this occurs, install an additional water temperature limit (Honeywell L4006 Aquastat) located in the system piping as shown in the Water Piping and Trim Section of this manual. Wire as indicated in the Electrical Section of this manual.

VI. ELECTRICAL (continued)

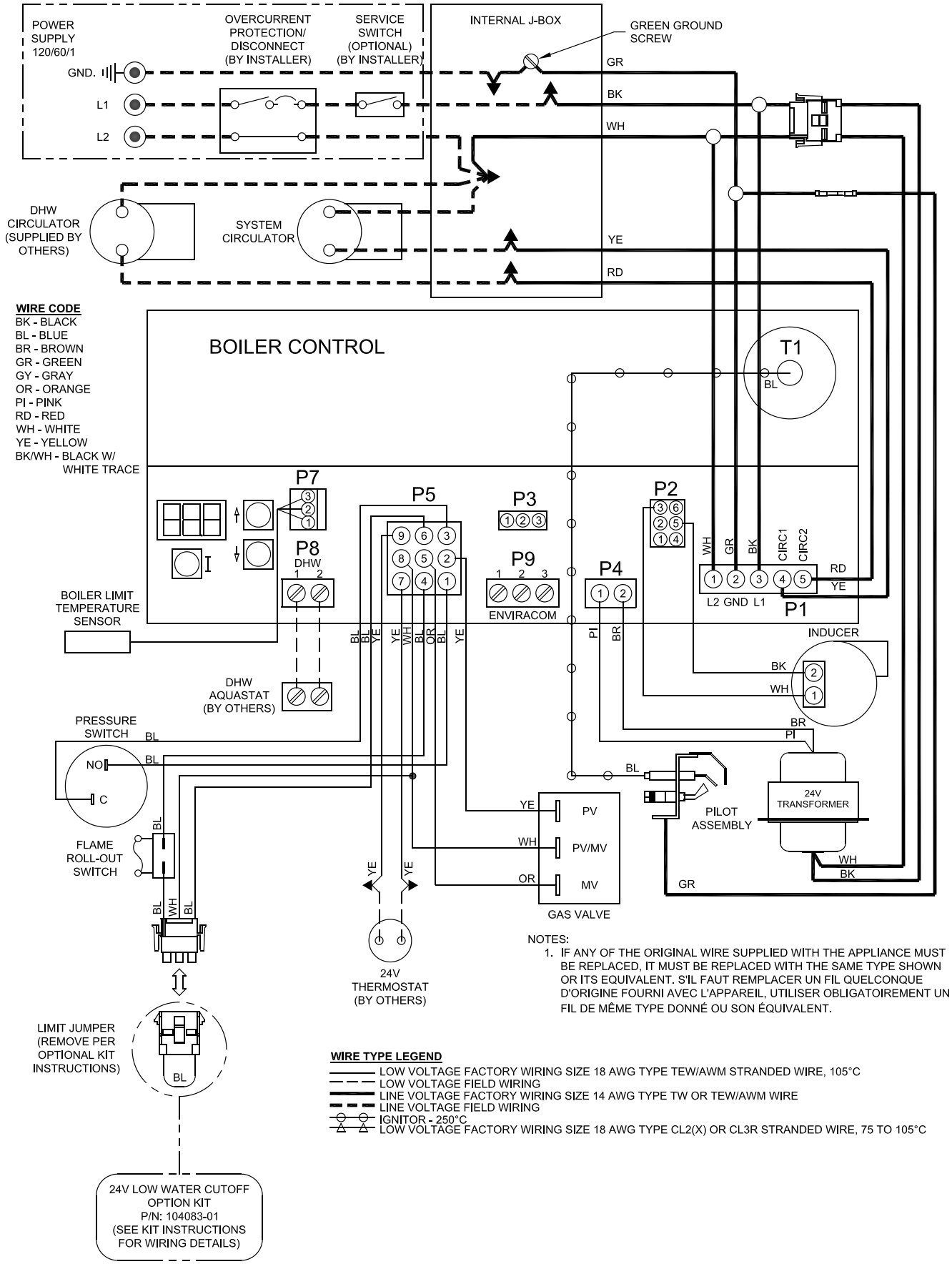

Figure 17: Wiring Connection Diagram

NOTICE

All wire, wire nuts, controls etc. are installer supplied unless otherwise noted.

If an additional system limit is used, install in series with the auxiliary limit jumper shown in the drawing below.

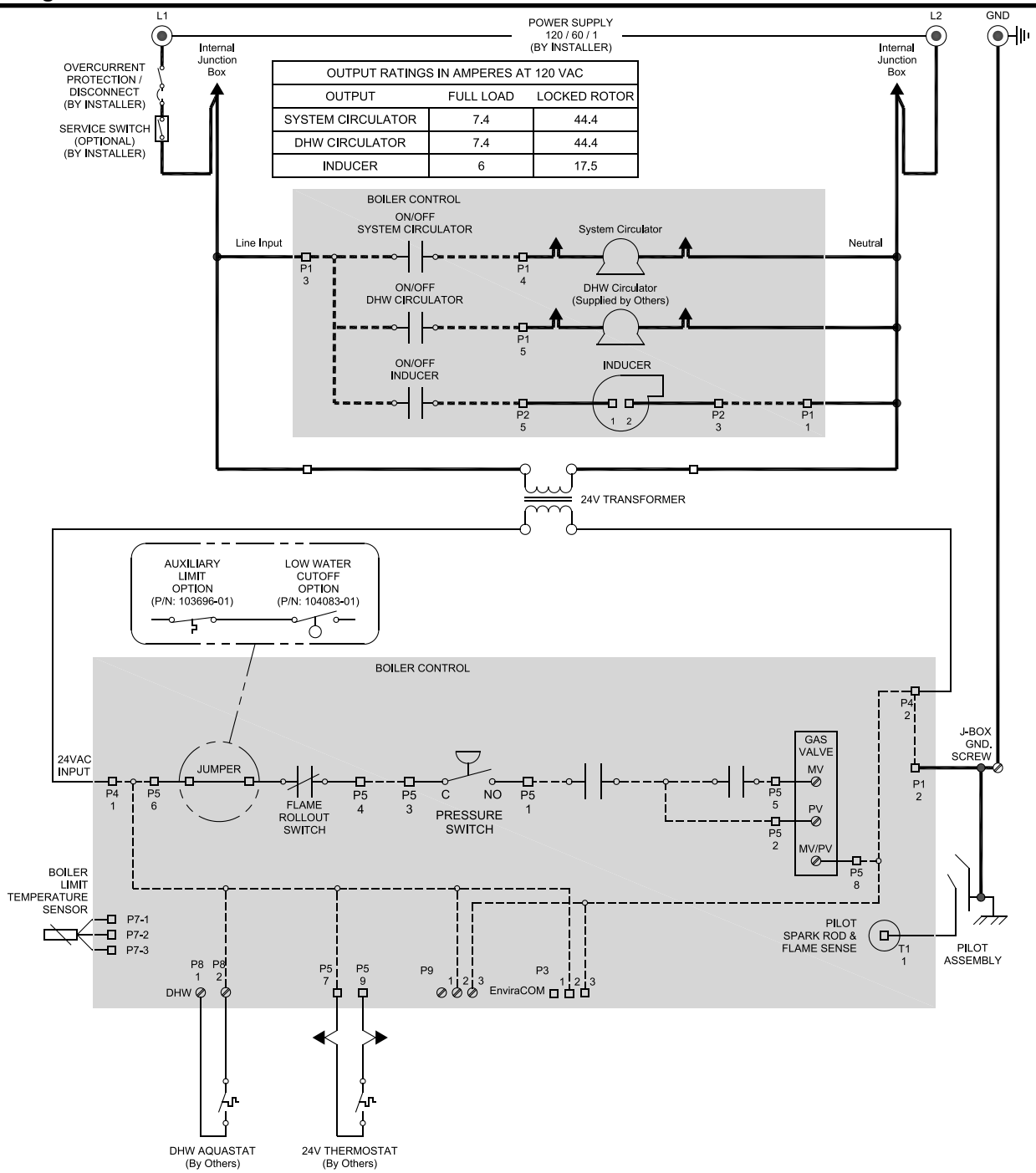

OUTPUT RATINGS IN AMPERES AT 120 VAC		
OUTPUT	FULL LOAD	LOCKED ROTOR
SYSTEM CIRCULATOR	7.4	44.4
DHW CIRCULATOR	7.4	44.4
INDUCER	6	17.5

OUTPUT RATINGS IN AMPERES AT 24 VAC	
OUTPUT	MAX
PILOT VALVE	2
MAIN VALVE	2

LADDER DIAGRAM LEGEND

- 120 VAC, PCB Internal Traces
- 120 VAC Wiring
- Low Voltage, PCB Internal Traces
- Low Voltage Wiring
- Wire Nut
- Molex Connection
- Screw Terminal

Figure 18: Wiring Ladder Diagram

VI. ELECTRICAL (continued)

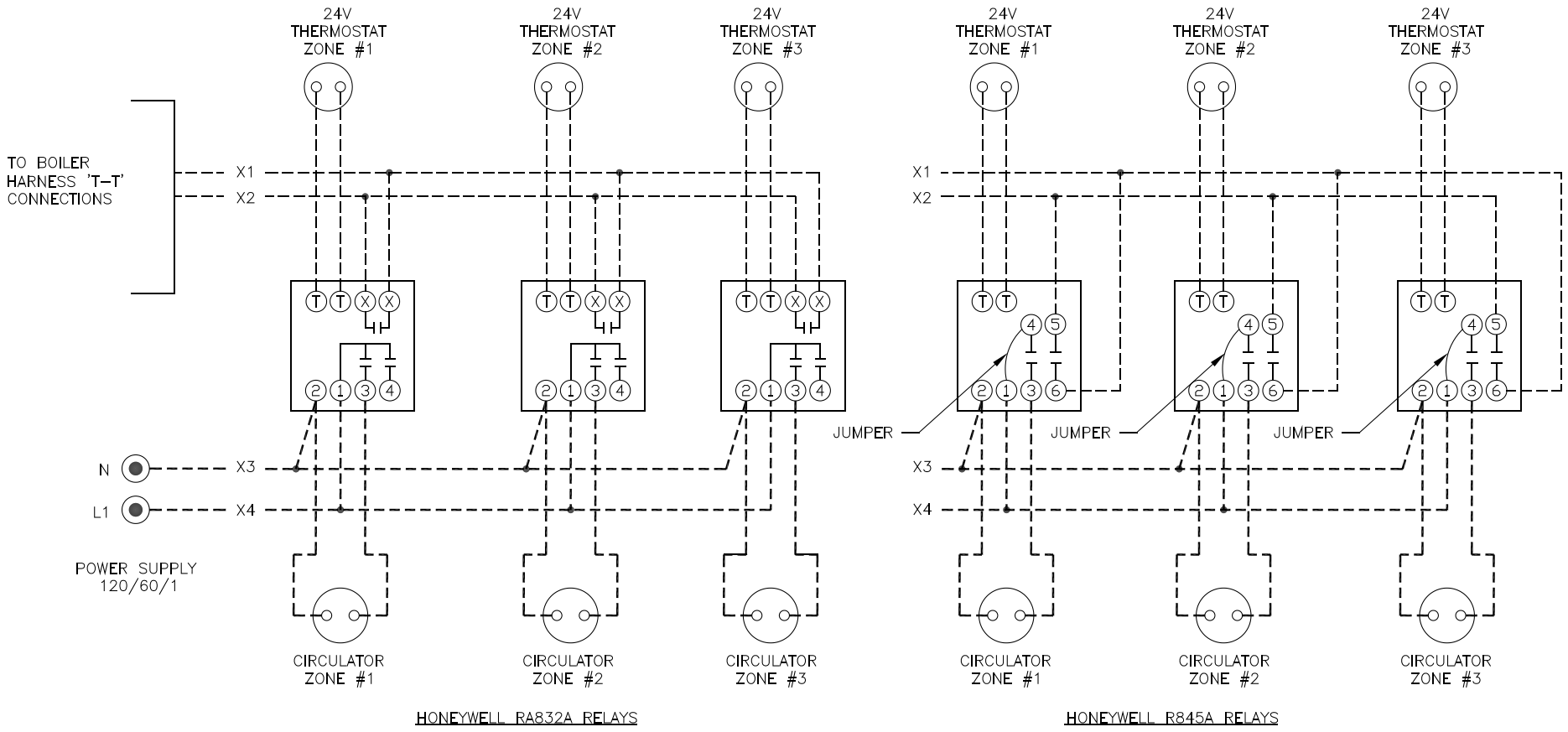

WIRE TYPE LEGEND

—— LOW VOLTAGE FACTORY WIRING SIZE 18 AWG TYPE TEW/AWM STRANDED WIRE, 105°C
– – LOW VOLTAGE FIELD WIRING
—— LINE VOLTAGE FACTORY WIRING SIZE 14 AWG TYPE TW OR TEW/AWM WIRE
– – LINE VOLTAGE FIELD WIRING

Figure 19: Circulator Zoned System Wiring Diagram

VI. ELECTRICAL (continued)

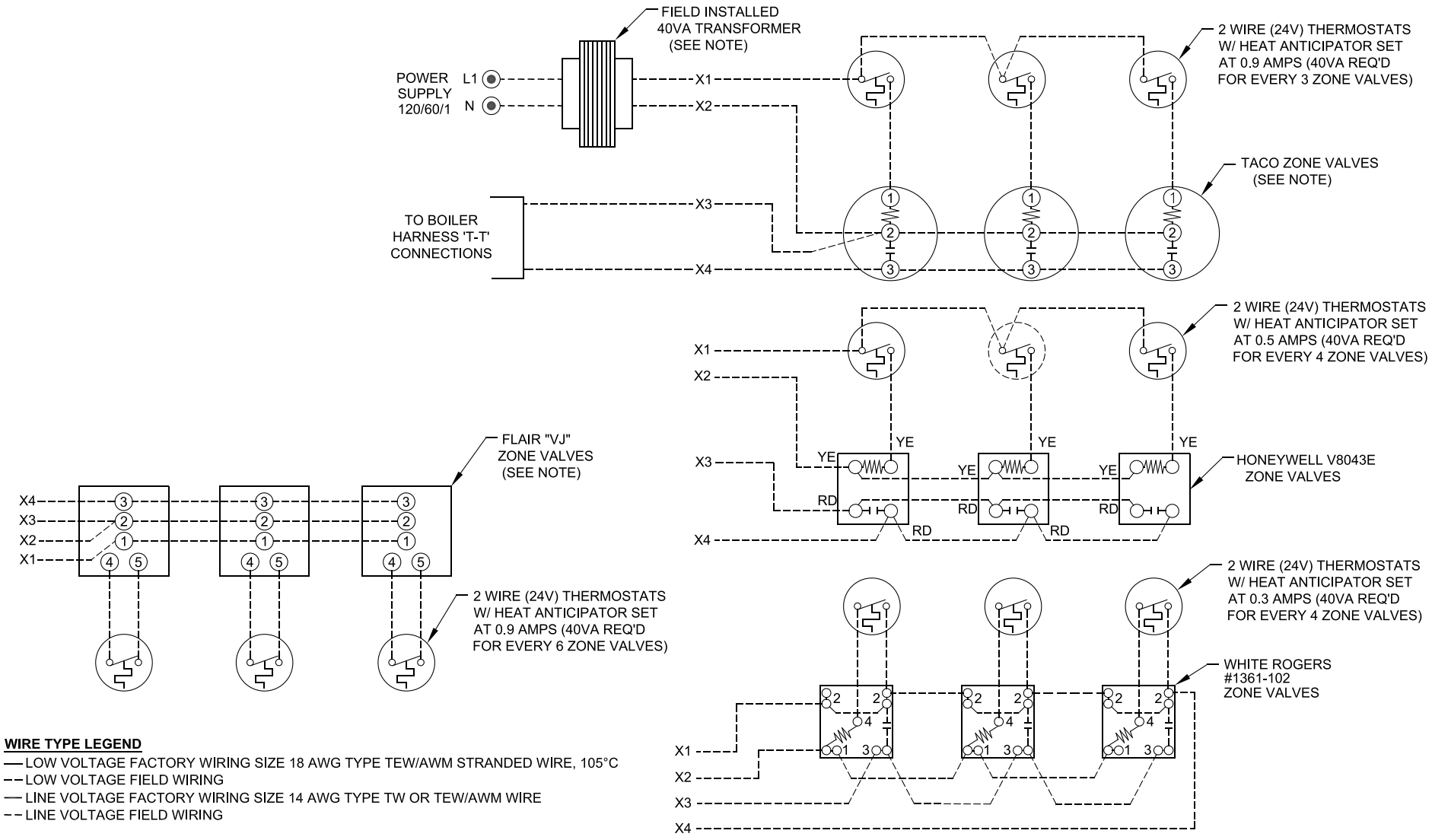

Figure 20: Zone Valve Zoned System Wiring Schematic

VII. MODULAR INSTALLATION

A. General Guidelines

1. Read and follow all venting, combustion air, water piping, gas piping and electrical instructions contained in this manual unless otherwise instructed in this section.
2. Consult Local Building Codes or National Fuel Gas Code, NFPA 54/ANSI Z222.3 for restrictions and instructions on modular boiler installations.

B. Module Sizing

New Yorker recommends sizing each boiler in a modular system to provide 20 % of the combined heating load where ever possible.

C. Venting

1. Each boiler must have an individual vent pipe. Refer to Venting Section of this manual for venting guidelines and options.

WARNING

Do not manifold vent pipes together.

2. The maximum vent length for each boiler is fifty (50) equivalent feet.
3. The minimum horizontal distance between vent terminations is one (1) foot. Additional horizontal distance is desirable to avoid frost damage to the building. Vent terminations must be at least twelve (12) inches above the ground plus the expected snow accumulation.

CAUTION

Installing multiple vent terminations close together promotes frost buildup on buildings. To minimize this possibility, extend the distance from the building to the end of the vent termination and increase the horizontal distance between terminations.

4. Multiple vertical vent pipes may be piped through a common conduit or chase so that one roof penetration may be made. Each vent termination must be one (1) foot from other terminations.

D. Water Piping (See Table 9 and Figure 21)

Installing a low water cutoff in the system piping of modular systems is strongly recommended and may be required by Local Codes.

E. Gas Piping

1. Refer to National Fuel Gas Code, Local Codes and Tables 7 and 8 for gas pipe sizing.

Table 9: Modular Boiler Water Manifold Sizing

Combined Output (MBH)	Recommended Minimum Common Water Manifold Size (NPT)
≤ 166	1¼”
≤ 260	1½”
≤ 550	2”
≤ 900	2½”
≤ 2000	3”

2. Each boiler must be piped as shown in Figure 16.

WARNING

If gas pressure in the building is above ½ psig, an additional gas pressure regulator is required. Using one additional regulator for multiple boilers may result in unsafe boiler operation. The additional regulator must be able to properly regulate gas pressure at the input of the smallest boiler. If the regulator cannot do this, two or more additional regulators are required. Consult regulator manufacturer and/or local gas supplier for instructions and equipment ratings.

F. Electrical

1. Each boiler must be provided with a fused disconnect and service switch.
2. Install wiring in accordance with requirements of authority having jurisdiction. In the absence of such requirements, follow the *National Electric Code,* ANSI/NFPA 70.

G. Modular Boiler Control Systems

Contact a controls manufacturer such as Honeywell or Tekmar to properly apply a modular control system.

Common systems may use outdoor temperature, return water temperature or both to stage the boilers.

VII. MODULAR INSTALLATION (continued)

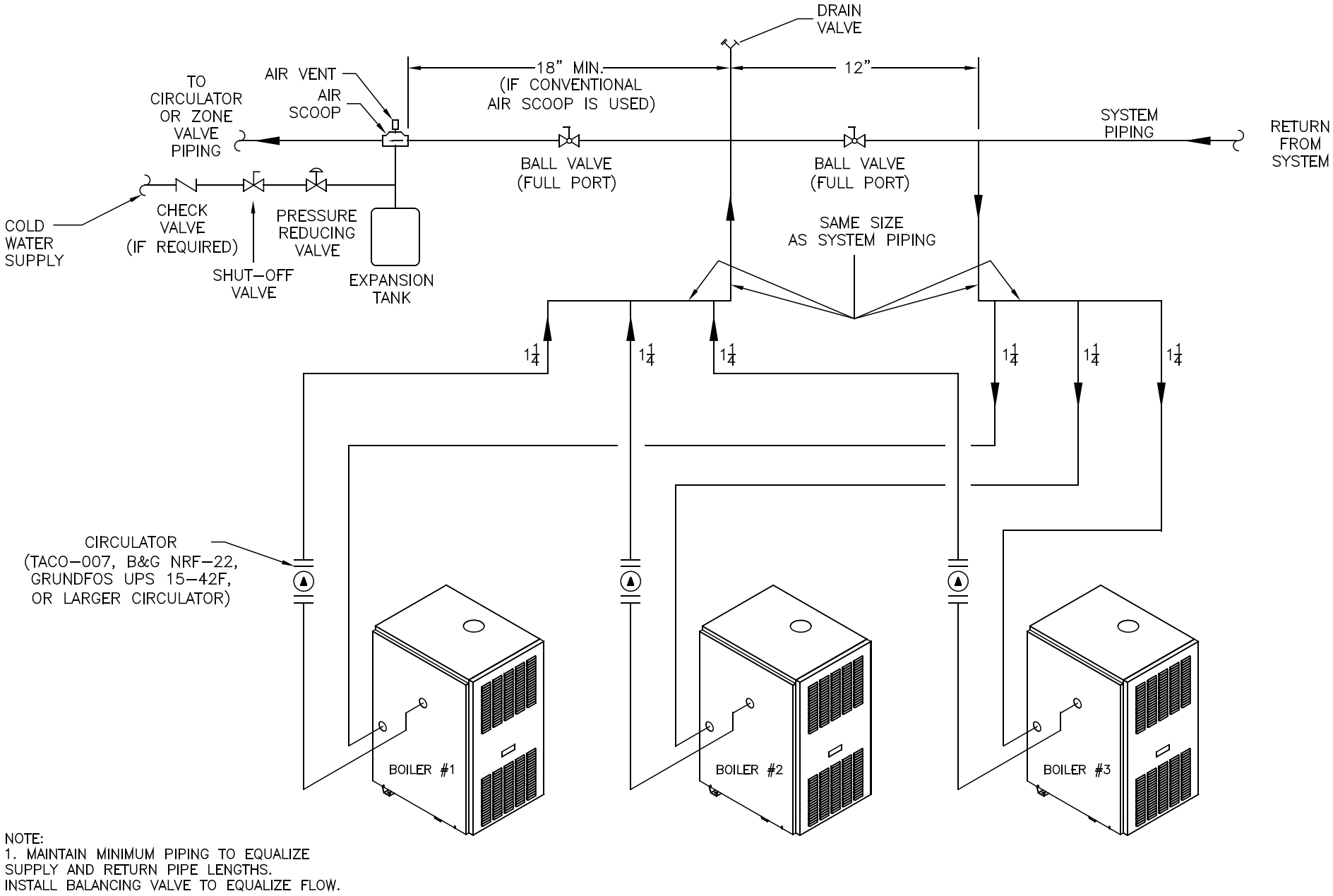

NOTE:
1. MAINTAIN MINIMUM PIPING TO EQUALIZE SUPPLY AND RETURN PIPE LENGTHS. INSTALL BALANCING VALVE TO EQUALIZE FLOW.

Figure 21: Modular Boiler Piping

VIII. SYSTEM START-UP

A. **Verify** that the venting, water piping, gas piping and electrical system are installed properly. Refer to installation instructions contained in this manual.

B. **Confirm** all electrical, water and gas supplies are turned off at the source and that vent is clear of obstructions.

C. **Confirm** that all manual shut-off gas valves between the boiler and gas source are closed.

WARNING

Completely read, understand and follow all instructions in this manual before attempting start up.

D. **Fill entire heating system with water** and vent air from system. Use the following procedure on a Series Loop or multi-zoned system installed as per Figure 14 or 15 to remove air from system when filling.

WARNING

The maximum operating pressure of this boiler is 30 psig. Never exceed this pressure. Do not plug or change pressure relief valve.

NOTICE

If it is required to perform a long term pressure test of the hydronic system, the boiler should first be isolated to avoid a pressure loss due to the escape of air trapped in the boiler.

To perform a long term pressure test including the boiler, ALL trapped air must first be removed from the boiler.

A loss of pressure during such a test, with no visible water leakage, is an indication that the boiler contained trapped air.

1. Close full port ball valve in boiler supply piping.
2. Isolate all zones by closing zone valves or shut-off valves in supply and return of each zone(s).
3. Attach a hose to the vertical hose bib located prior to the full port ball valve in the system supply piping. (Note - Terminate hose in five gallon bucket at a suitable floor drain or outdoor area).
4. Starting with one circuit at a time, open zone valve or shut-off valve in system supply and return piping.
5. Open hose bib.
6. Open fill valve (Make-up water line should be located directly after full port ball valve in system supply piping between air scoop and expansion tank).
7. Allow water to overflow from bucket until discharge from hose is bubble free for 30 seconds.
8. Close the opened zone valve or shut-off valve for the zone being purged of air, then open the zone valve or shut-off valve for the next zone to be purged. Repeat this step until all zones have been purged. At completion, open all zone valves or shut-off valves.
9. Close hose bib, continue filling the system until the pressure gauge reads 12 psi. Close fill valve.

   (Note - If make-up water line is equipped with pressure reducing valve, system will automatically fill to 12 psi. Follow fill valve manufacturer's instructions).
10. Open isolation valve in boiler supply piping.
11. Remove hose from hose bib.

E. **Confirm that the boiler and system have no water leaks.**

F. **Prepare to check operation.**

1. Obtain gas heating value (in Btu per cubic foot) from gas supplier.
2. Connect manometer to pressure tap on gas valve. Use 1/8 NPT tapping provided.
3. Temporarily turn off all other gas-fired appliances.
4. Turn on gas supply to the boiler gas piping.
5. Confirm that the supply pressure to the gas valve is 14 in. w.c. or less. Refer to Table 5 for minimum supply pressure.
6. Open the field installed manual gas shut-off valve located upstream of the gas valve on the boiler.
7. Using soap solution, or similar non-combustible solution, electronic leak detector or other approved method. Check that boiler gas piping valves, and all other components are leak free. Eliminate any leaks.

DANGER

Do not use matches, candles, open flames or other ignition source to check for leaks.

8. Purge gas line of air.

G. **Operating Instructions**

Follow Operating Instructions to place boiler in operation. See Operation Section for details.

FOR YOUR SAFETY READ BEFORE OPERATING

WARNING: If you do not follow these instructions exactly, a fire or explosion may result causing property damage, personal injury, or loss of life.

A. This appliance is equipped with an ignition device which automatically lights the pilot. Do not try to light the pilot by hand.

B. BEFORE OPERATING smell all around the appliance area for gas. Be sure to smell next to the floor because some gas is heavier than air and will settle on the floor.

WHAT TO DO IF YOU SMELL GAS
- ➤ Do not try to light any appliance.
- ➤ Do not touch any electric switch; do not use any phone in your building.
- ➤ Immediately call your gas supplier from a neighbor's phone. Follow the gas supplier's instructions.
- ➤ If you cannot reach your gas supplier, call the fire department.

C. Use only your hand to push in or turn the gas control knob. Never use tools. If the knob will not push in or turn by hand, don't try to repair it, call a qualified service technician. Force or attempted repair may result in a fire or explosion.

D. Do not use this appliance if any part has been under water. Immediately call a qualified service technician to inspect the appliance and to replace any part of the control system and any gas control which has been under water.

OPERATING INSTRUCTIONS

1. STOP! Read the safety information above on this label.
2. Set the thermostat to lowest setting.
3. Turn off all electric power to the appliance.
4. This appliance is equipped with an ignition device which automatically lights the pilot. Do not try to light the pilot by hand.
5. Remove front door.
6. Locate the gas control valve at the end of the gas supply pipe going into the boiler. The gas control knob is the brown or blue plastic knob located on top of the gas control valve.

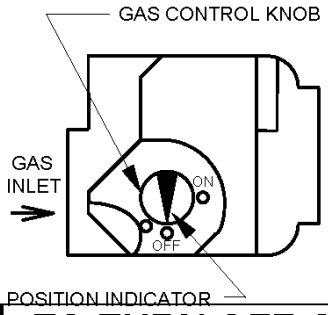

7. Rotate gas control knob clockwise from "ON" position to "OFF". Make sure knob rests against stop.
8. Wait five (5) minutes to clear out any gas. Then smell for gas, including near the floor. If you smell gas, STOP! Follow "B" in the safety information above on this label. If you do not smell gas, go to the next step.
9. Rotate gas control knob counterclockwise from "OFF" to "ON". Make sure knob rest against stop. Do not force.
10. Replace front door.
11. Turn on all electric power to the appliance.
12. Set thermostat to desired setting.
13. If the appliance will not operate, follow the instructions "TO TURN OFF GAS TO APPLIANCE" and call your service technician or gas supplier.

TO TURN OFF GAS TO APPLIANCE

1. Set the thermostat to lowest setting.
2. Turn off all electric power to the appliance if service is to be performed.
3. Remove front door.
4. Rotate gas control knob clockwise from "ON" position to "OFF". Make sure knob rests against stop.
5. Replace front door.

Figure 22: Operating Instructions

H. Check pilot burner flame. See Figure 24. Flame should be steady, medium hard blue enveloping 3/8 to ½ inch of sensing probe.

I. Check main burner flame. See Figure 23. Flame should have clearly defined inner cone with no yellow tipping. Orange-yellow streaks should not be confused with true yellow tipping.

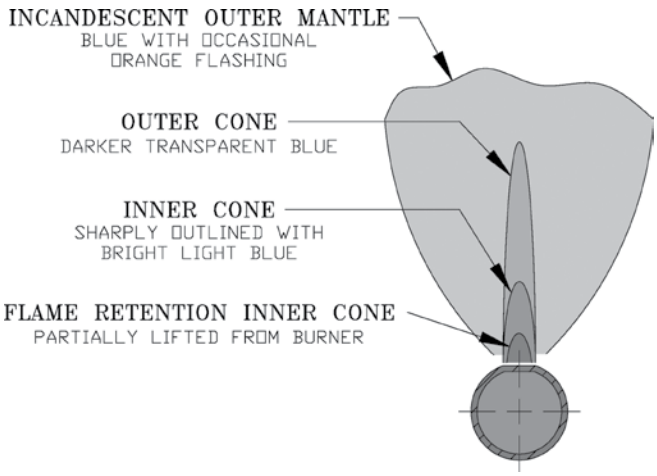

Figure 23: 1 Inch Main Burner Flame

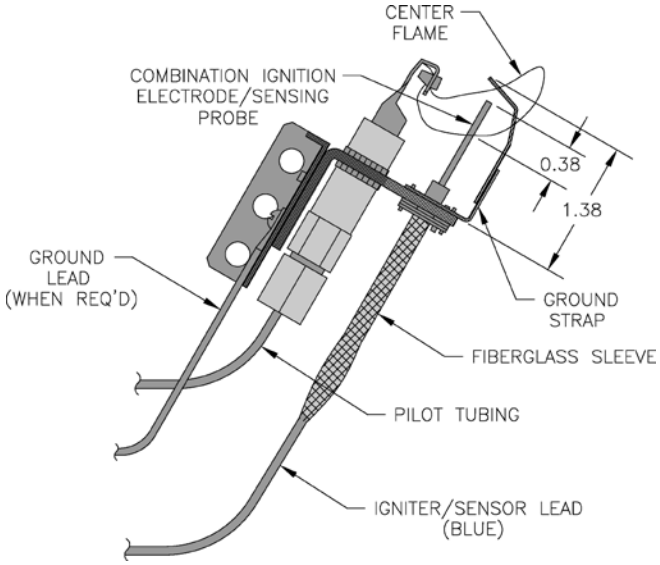

Figure 24: Pilot Burner Flame

J. Check thermostat operation. Raise and lower temperature setting to start and stop boiler operation.

K. Check ignition control module shut-off. Disconnect pilot lead wires from gas valve. If burners do not shutdown, determine cause of malfunction. Replace necessary items and check operation.

L. Check low water cutoff (if so equipped).

1. Adjust thermostat to highest setting.
2. With boiler operating, open drain valve and slowly drain boiler.
3. Main burners and pilot burner will extinguish and blower will stop when water level drops below low water cutoff probe. Verify limit, thermostat or other controls have not shut off boiler.
4. Adjust thermostat to lowest setting. Refill boiler.

M. Check limit.

Jumper Thermostat connections in boiler wiring harness. Allow burners to operate until shutdown by limit. REMOVE JUMPER.

N. Adjust gas input rate to boiler.

1. Adjust thermostat to highest setting.
2. Check manifold gas pressure. See Table 5 or rating label located in the boiler's vestibule compartment. Adjust gas valve pressure regulator as necessary (turn adjustment screw counterclockwise to decrease manifold pressure, or clockwise to increase manifold pressure). If pressure cannot be attained, check gas valve inlet pressure. If less than minimum indicated in Table 5 or boiler's rating label, contact gas supplier for assistance.
3. Clock gas meter for at least 30 seconds. Use Table 10 to determine gas flow rate in Cubic Feet per Hour.

Table 10: Gas Flow Rate in Cubic Feet Per Hour

Seconds for One Revolution	Size of Gas Meter Dial		
	One-Half Cu. Ft.	One Cu. Ft.	Two Cu. Ft.
30	60	120	240
32	56	113	225
34	53	106	212
36	50	100	200
38	47	95	189
40	45	90	180
42	43	86	172
44	41	82	164
46	39	78	157
48	37	75	150
50	36	72	144
52	35	69	138
54	33	67	133
56	32	64	129
58	31	62	124
60	30	60	120

WARNING

Failure to properly adjust gas input rate will result in over firing or under firing of the appliance. Improper and unsafe boiler operation may result.

4. Determine Input Rate. Multiply gas flow rate by gas heating value.
5. Compare measured input rate to input rate stated on rating plate.
   a. Boiler must not be over fired. Reduce input rate by decreasing manifold pressure. Do not reduce more than 0.3 inch w.c. If boiler is still overfired, contact your New Yorker distributor or Regional Office for replacement Gas Orifice.
   b. Increase input rate if less than 98% of rating plate input. Increase manifold gas pressure no more than 0.3 inch w.c. If measured input rate is still less than 98% of rated input:
      i. Remove Main Burners per procedure in Section XI: Service.
      ii. Remove gas orifices. Drill one (1) drill size larger (drill size is stamped on orifice, or see Section XII: Repair Parts).
      iii. Reinstall gas orifices and main burners. Measure input rate.
6. Recheck Main Burner Flame.
7. Return other gas-fired appliances to previous conditions of use.

O. **Review User's Information Manual** and system operation with owner or operator.

IX. OPERATION

A. Boiler Sequence of Operation

NORMAL OPERATION

1. The PVCG-B Boilers are equipped with a Boiler Control (control). This control replaces the traditional separate ignition control, high limit switch, blower relay and circulator relay and adds energy saving thermal purge features. Energy is saved by starting the circulator and delaying the burner start when there is residual heat available in the boiler.
2. The boiler's sequence of operation is shown in Table 11.
3. When the thermostat calls for heat the control starts the system circulator and the thermal purge (circulator Pre-purge time) begins. If the time is completed or boiler temperature is less than the Start Temperature (140°F default) the start sequence continues by energizing the blower. Once the pressure switch is proven, the ignition sequence is started allowing gas flow and ignition of the burners.
4. If the thermostat is not satisfied and the operating setpoint is reached the system circulator will continue to operate and the burner will stop. When the boiler water temperature drops below the setpoint less the differential setting the burner will restart.
5. After the thermostat is satisfied the burner, circulator and blower are stopped.
6. When a indirect water heater aquastat call for heat is wired to the DHW input the control starts the Domestic Hot Water circulator and, if the boiler temperature is less than the operating setpoint less differential, the blower is energized without delay. Once the pressure switch is proven, the ignition sequence is started allowing gas flow and ignition of the burners.

B. Boiler Fault

In the event the boiler fails to start, the control provides status information to help determine the cause of the problem. Table 12 provides a list of boiler status codes that are reported. Refer to the Troubleshooting Section for more information.

C. Using Display

The control is located inside the boiler front door. (Figure 25).

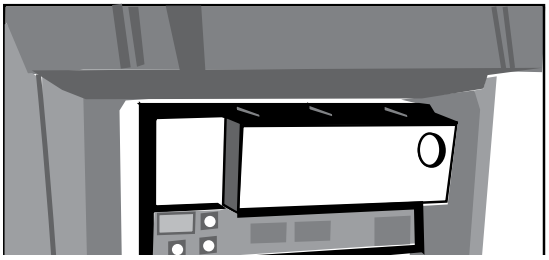

Figure 25: Boiler Control

Table 11: Sequence of Operation

Status Codes displayed in StA Mode		
Status	StA	Description
Standby (Burner off Circulator off)	1	No call for heat detected
Circulator Pre-purge (burner off circulator on)	1	Either condition is true: a. Call for heat detected and boiler temperature higher than operating setpoint. b. Call for heat detected and boiler temperature higher than Start Temperature (140°F default) and Circulator Pre-purge Time has not expired.
Self Test	17	Control internal checking
Waiting for Pressure Switch to Close (Blower on)	3	The blower is turned on. The control is waiting for the pressure switch to close.
Pre-purge	4	The blower is run for a 30 second pre-purge
Spark	6	The pilot fuel valve is open and sparking is started.
Flame Proving	7	The main fuel valve is open and flame is being proven.
Running	8	The burner runs until the call for heat is satisfied or the operating setpoint is reached.

Table 12: Sequence Fault

Status Codes displayed in StA Mode		
Status	StA	Description
Retry / Recycle Delay	10	If the burner fails to light off (no flame signal), it waits 5 minutes and retries or if the control loses flame signal during running, it will wait 10 seconds and then recycle.
Pressure Switch Failed to Open	11	The blower is off and the pressure switch as failed to open.
Pressure Switch Failed to Close	12	The blower is on and the pressure switch has failed to close.
Soft Lockout	13	System is shutdown and will restart following a one hour enforced delay.
Hard Lockout	14	System is locked out. A manual or power reset is required to be able to light off again.
Limit Open	15	There is a call for heat from the thermostat, but a Safety Limit is open.
Flame Present Out of Sequence	16	Flame signal is still present when expected to be 0 (no flame).

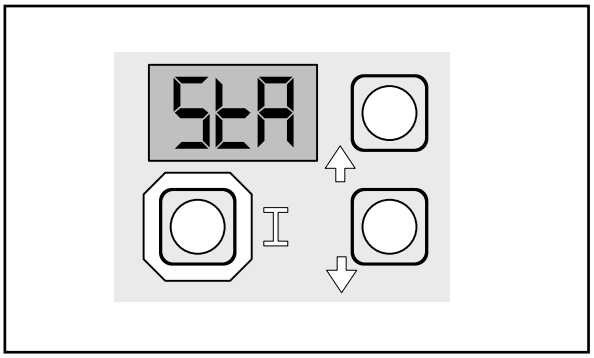

Figure 26: Boiler Display

The control display, along with Up ⇧, Down ⇩, and "I" keys may be used to view boiler operating status (Figure 26).

D. VIEWING THE OPERATING MODE OPTIONS

In operating mode the user may view (but not change) boiler operating status, settings and troubleshooting information. To view control display information:

1. Press and release the "I" key on the control to change from one parameter to the next. Each setting will alternately flash between the relevant display code and its corresponding value.

Operating Mode Options	
StA	Status
bt	Boiler Temperature
SP	Operating Setpoint (Outdoor Reset)
HL	High Limit Setting
HdF	High Limit Differential
tt	Heat Request Status
dh	DHW Heat Request Status
FLA	Flame Current
rUn	Run Time Hours
CYC	Boiler Cycles
Err	Error (see Error Numbers)

The StA (status) display code has the below listed values. This list is also available on the control cover.

Status Code Displayed in StA Mode	
1	Standby
2	Waiting for Pressure Switch to Open
3	Waiting for Pressure Switch to Close
4	Prepurge
6	Spark
7	Flame Proving
8	Running
10	Retry/Recycle Delay
11	Pressure Switch Failed to Open
12	Pressure Switch Failed to Close
13	Soft Lockout
14	Hard Lockout
15	Waiting for Limit to Close
16	Flame Present Out of Sequence
17	Self Test

For example, when the "I" key is pressed on the control until "bt" is displayed, it will then flash a three digit number (such as " 180") followed by either "F" (or "C"). This indicates that the boiler water temperature is 180°F. Other operating parameters display the information in a similar fashion.

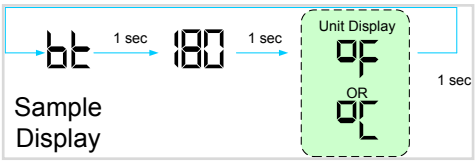

Please note that in operating mode to hold the display on the value the user can press and hold either the Up ⇧ or Down ⇩ keys and the value will be continuously shown. This may be helpful in watching a value "live".

E. CHANGING THE ADJUSTABLE PARAMETERS

To adjust parameters such as High Limit Setpoint and High Limit Differential:

1. Access the adjustment mode by pressing and holding the Up ⇧, Down ⇩, and "I" keys simultaneously for three (3) seconds. This procedure is intended to discourage unauthorized changes or accidental changes to limit settings.
2. Press the "I" key to display available Adjustment Mode options. Select an option.

Adjustment Mode Options		
HL_	140-220°F	**Adjust High Limit Setting**
dF_	10-30°F	**Adjust High Limit Differential**
Or_	0-10 minutes	**Circulator Overrun Time**
PP_	2-20 minutes	**Circulator Pre-purge Time**
St_	140-180°F	**Start Temperature**
Pt_	On or oFF	**Priority time**
dh_	dh or tt2	**DH Terminal Function**
rSt		**Reset Lockout**
F-C	F or C	**Select degrees F or C Mode**
bAc		**Back to Operating Mode**

3. Press the Up ⇧ and Down ⇩ keys to adjust the displayed item to the desired value.
4. To return to the normal operating mode from the Adjustment Mode, when the "bAc" option is displayed, press either the Up ⇧ or Down ⇩ key. If no keys are pressed, after five (5) minutes the control will automatically return to the Operating Mode.

F. MORE INFORMATION ABOUT ADJUSTABLE PARAMETERS

1. High Limit (HL_)

   The control is factory programmed with a High Limit Setpoint of 180°F. The burner turns "off" when the boiler water temperature (bt) is above this value. The High Limit setpoint is adjustable between 140° and 220°F. The Operating Setpoint (SP) will equal the High Limit Setpoint.

2. Differential (dF_)

   The control is factory programmed with a Differential of 15°F. The Differential is the number of degrees the boiler temperature must decrease below the Operating Setpoint before the boiler can restart. The differential is adjustable between 10° through 30°F.

3. Circulator Overrun Time (Or_)

   The control is factory programmed with a Circulator Overrun Time of 0 minutes. Circulator Overrun Time (also called "circulator off delay" or "circulator post purge") continues circulator operation after a call for heat has ended, sending excess heat from the boiler into the system. Ensure system piping and zone panel settings allow water flow to the priority zone after the call for heat ends. The Circulator Overrun Time is adjustable between 0 through 10 minutes.

4. Circulator Pre-purge Time (PP_)

   When the boiler is warm (boiler water temperature higher than 140°F (adjustable using Start Temperature parameter)) and there is a thermostat call for heat, the system circulator is started and boiler firing is delayed Circulator Pre-purge minutes. If the temperature drops below 140°F or there is a DHW call for heat the boiler is started without delay. Additionally, the boiler is started without delay if the thermostat call for heat is initiated when the boiler water temperature is less than 140°F. This feature helps save energy by satisfying home heating needs with residual boiler heat rather than cycling the boiler. The Circulator Pre-purge time has a factory setting of 2 minutes and is field adjustable between 2 and 20 minutes. Refer to Table 13.

5. Start Temperature (St_)

Table 13: Circulator Pre-purge Time example, (PP_ = 2 minutes)

Call for Heat Source	DHW Terminal Selection	Boiler Temperature	Burner Status
TT = on	-	<140	Start with no delay
TT = on	-	>140	Start after 2 minute delay
DHW = on	tt2	<140	Start with no delay
DHW = on	tt2	>140	Start after 2 minute delay
DHW = on	dh	<140	Start with no delay
DHW = on	dh	>140	Start with no delay

   Amount of "Heat available" is calculated by taking the difference between measured boiler water temperature and the Start Temperature setting. Useful "Heat Available" is dependent on the type of heating emitter installed in the home. Heat emitters require a certain minimum temperature to operate effectively. Our default settings reflect cast iron radiators. Fan Coils may require a start temperature setting of 180°F or 160°F before providing heat to the home. The Start Temperature has a factory setting of 140°F and is field adjustable between 140°F and 180°F.

6. Priority Time (Pt_)

   When the Priority Time parameter is set to "on" and Domestic Hot Water (DHW) call for heat is "on" the DHW demand will take "Priority" over home heating demand. During Priority Time the system circulator will be forced "off". Priority Time ends and the system circulator is released to service home heating demand when Domestic Hot Water call for heat is over. When Priority Time parameter is set to "Off" the DHW call for heat does not force "off" the system circulator. The Priority Time has a factory setting of "On" and is field adjustable between "On" and "Off" Refer to Table 14.

7. Domestic Hot Water (DHW) Terminal Function (dh_)

The control allows configuration of the DHW Circulator output functionality to help the PVCG-B integrate into each installation more effectively. The DHW Circulator output can be connected to a domestic hot water circulator or a second heating zone circulator. These applications are selected as follows:

a. When dh_ is set equal to Domestic Hot Water Demand (dh)

When there is an Indirect Water Heater (IWH) the control provides "DHW" input terminals for the IWH Aquastat and "DHW Circulator" output terminals for the DHW Circulator.

When there is a DHW call for heat, the System Circulator is "forced off", the DHW Circulator terminal is energized and the circulator pre-purge time delay control logic is bypassed to allow the boiler to fire without delay. When DHW demand ends the System Circulator "force off" is removed, the circulator can respond normally, and the DHW Circulator is de-energized. The DHW call for heat is detected by a voltage on to the "DHW" terminal. When the Priority Time parameter is set to "oFF" the System Circulator is not forced off for a DHW call for heat. Refer to Table 14.

b. When dh_ is set equal to Second Heating Zone (tt2)

When there is no IWH the "DHW Circulator" output may be configured to control a second heating zone. This is particularly helpful when the home uses only two heating zones. The control replaces the need for a two circulator zone panel. When DHW Terminal Function (dh_) is set to "tt2" the control's two circulator outputs are used to control two independent heating zones. Refer to Table 15. A "TT" input causes a call for heat and energizes the "System Circulator" output to service heating zone 1 and a second zone's thermostat wired to the "DHW" input causes a call for heat and energizes heating zone 2 circulator wired to the "DHW Circulator" output.

When there is a Second Heating Zone (call for heat) the boiler is started and the DHW Circulator terminal is energized. When Second Heating Zone terminal is de-energized the call for heat is ended and the DHW Circulator is de-energized. A Second Heating Zone is detected by sensing a voltage on the DHW terminal.

Table 14: DHW Terminal Function (dh_) Selection = Domestic Hot Water Demand, (Parameter dh_ = dh)

Call for Heat			Circulator Status	
T-T Input	DHW Input	Priority Time (Pt_)	System Circulator Output	DHW Circulator Output
on	off	On	on	off
on	on	On	off	on
off	on	On	off	on
on	off	OFF	on	off
on	on	OFF	on	on
off	on	OFF	off	on

Table 15: DHW Terminal Function (dh_) Selection = Second Heating Zone, (Parameter dh_ = tt2)

Call for Heat		Circulator Status	
T-T Input	DHW Input	System Circulator Output (Zone 1)	DHW Circulator Output (Zone 2)
off	off	off	off
on	off	on	off
on	on	on	on
off	on	off	on

X. TROUBLESHOOTING

A. Before troubleshooting

The following pages contain trouble shooting tables for use in diagnosing control problems. When using these tables the following should be kept in mind:

1. This information is only meant to be used by a professional heating technician as an aid in diagnosing boiler problems.
2. Where applicable, perform startup checks and adjustments outlined in Section VIII 'System Start-Up'.
3. In general, these tables assume that there are no loose or miswired electrical connections. Before using these tables inspect all electrical connections on the boiler to make sure that they are tight. Also, check the wiring on the boiler against the wiring diagram in Figures 17 and 18. Ensure that incoming 120 Vac power polarity is correct and that the boiler is properly grounded. Further, ensure that the control power supply is 24 VAC (minimum 18 VAC to maximum 30 VAC) and polarity is correct.
4. All controls on the boiler are tested at least once in the manufacturing process and a defective control or component is generally the least likely cause. Before replacing a component, try to rule out all other possible causes.
5. When checking voltage across wiring harness pins be careful not to insert the meter probes into the pins. Doing so may damage the pin, resulting in a loose connection when the harness is reconnected.

Operating Mode Parameters

StA	Status (see Status Numbers)
bt	Boiler Temperature
SP	Operating Setpoint (Outdoor Reset)
HL	High Limit Setpoint
HdF	High Limit Differential Setpoint
tt	Heat Request Status
dh	DHW Heat Request Status
FLA	Flame Current
run	Run Time Hours
CYC	Boiler Cycles
Err	Error (see Error Numbers)

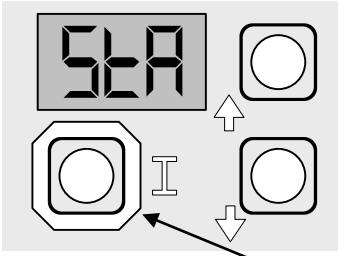

Press "I" key on the control to change from one parameter to the next. Each setting will alternate between display code (for example StA) and value.

When Err (error) is shown:

Value	Description
2	Pressure Switch Failed to Open
4	Flame current lower than threshold
6	Flame Out of Normal Sequence
18	Electronics Failure
23	Flame Sensed During Pre-purge
29	Pressure Switch Failed to Close
32	Temperature Sensor Failure
35	Duplicate Zone Alarm
57	Flame Rod Shorted to Ground
58	AC Line Frequency
59	Line Voltage Error
60	Thermostat input higher than threshold
61	Line Voltage Unstable
63	Soft Lockout – Recycles Exceeded
64	Soft Lockout – Internal Failure

Possible StA (status) values:

Value	Description
1	Standby
2	Waiting for Pressure Switch to Open
3	Waiting for Pressure Switch to Close
4	Pre-purge
6	Spark
7	Flame Proving
8	Running
10	Retry/Recycle Delay
11	Pressure Switch Failed to Open
12	Pressure Switch Failed to Close
13	Soft Lockout
14	Hard Lockout
15	Waiting for Limit to Close
16	Flame Present Out of Sequence
17	Self Test

X. TROUBLESHOOTING (continued)

Use Control Display Err (error) Number To Direct TroubleShooting Efforts

If the control detects an error it will flash "Err" (error) followed by a number. Use this number to identify the boiler problem and corrective action in the table below. If there is no Err display proceed to next Section:

IQ Boiler Control Error Codes (when "Err" is flashing)			
Display		Status	Boiler / Control Action(s)
Blank		Boiler and Circulator off	No 120 Vac power at boiler, check breaker and wiring between breaker panel and boiler.
Err	2	Pressure Switch Failed to Open	While the blower is "off" the pressure switch failed to open (contact stuck closed). - Check wiring - Kinked or blocked pressure switch tubing - Defective pressure switch
Err	4	Flame Current Lower than Threshold	Check pilot assembly. Refer to Troubleshooting Section, 6
Err	6	Flame Sensed Out of Normal Sequence	Flame sensed out of normal sequence (before opening gas valve or after closing gas valve). Check gas valve operation.
Err	18	Electronics Failure	Cycle power to control. Replace control if problem persists.
Err	23	Flame Sensed During Pre-Purge	Flame sensed during post-purge (before gas valve signaled open). Check the gas valve for proper operation. Replace gas valve is problem persists..
Err	29	Pressure Switch Failed to Close	While the blower is "on" the pressure switch failed to close. - Connect manometer to pressure switch. Is differential pressure greater than minimum, replace pressure switch. - Check if tubing is securely connected to canopy - Check if tubing is free of cracks or holes or condensate - Check for blockage in vent/air intake system - Vent system not installed in accordance with installation manual - Wind at horizontal vent terminal in excess of 40 mph - Replace blower
Err	32	Temperature Sensor Failure	Temperature sensor or interface failure (open or short connection, increased connection resistance, dual sensor mismatch) or control hardware failure.
Err	35	Duplicate Zone Alarm	Refer to IQ Zone Panel Instructions.
Err	57	Flame Rod Shorted to Burner Ground	Flame Rod shorted to burner ground, this can result from excessive flue gas condensation. - Check for excessive condensate, dry pilot. Adjust setpoint higher. - Check for loose or damaged ignition wire.
Err	58	AC Line Frequency Error	AC Signal is too noisy or frequency is incorrect. Check supply voltage.
Err	59	Line Voltage Error	AC voltage out of specification high or low. Check supply voltage.
Err	60	Thermostat Input Higher than Threshold	Check thermostat wiring.
Err	61	Line Voltage Unstable	Possibly too many heavy loads switching on and off cause erratic supply voltage. Check supply voltage.
Err	63	Soft Lockout - Maximum Recycles Exceeded	Maximum number of recycles exceeded. Refer to Troubleshooting Section, 5.
Err	64	Soft Lockout - Internal Failure	The electronics has detected an error. This can be caused by an actual controller internal fault or wiring fault: - Check pilot assembly, - If problem persists, replace the control.
Err	89	Communication Lost	Check wiring between control and IQ Zone Panel or IQ Reset Card.

X. TROUBLESHOOTING (continued)

Use StA (status) Number To guide TroubleShooting

The control will flash "StA" followed by a number. Use this number to identify the boiler problem in the table below:

1. Boiler and Circulator Off

Display / Status	Recommended Corrective Action
StA 1 Standby Burner off Circulator off	The boiler has not detected a call for heat (tt = oFF and dh = oFF). Check the thermostat: - When a thermostat call for heat is detected control display "tt" will show "on" - Make sure thermostat is calling for heat and contacts (including appropriate zone controls) are closed. Check for loose connection. Check the DHW demand: - When a domestic call for heat is detected "dh" will show "on" - Make sure the DHW aquastat contact is closed. Check for loose connection.

2. Circulator is On, But Boiler is Off

Display / Status	Recommended Corrective Action
StA 1 Circulator Pre-purge Burner off Circulator on	The boiler is warm and circulator is providing residual boiler heat to building: Check boiler temperature - The boiler will not start until boiler water temperature is less than the Setpoint (SP) minus differential (dF) - If boiler water temperature is higher than Start Temperature (St_, default = 140 F) and the Circulator Pre-purge (PP_, default = 2 minutes) time has not expired, boiler start will be delayed until water temperature drops or time expires. To permit the boiler to start sooner increase Start Temperature parameter. Refer to Operation Section for additional information.

3. Boiler is On, But Circulator is Off

Display / Status	Recommended Corrective Action
StA 8 Burner on Circulator off	Domestic Hot Water (DHW) Priority Forcing Circulator Off - When there is a DHW heat request wired to the control's DHW terminal the System Circulator will be "forced off" for the duration of the DHW heat request. When the DHW heat request ends the System Circulator "force off" is removed, the circulator can respond normally. When the Priority Time, (Pt_) Parameter is set to "oFF" the System Circulator is not "forced off" for a DHW call for heat. Wiring / Circulator Issue: - Check wiring for loose connection, miswiring - Check circulator

4. Circulator is On, But Blower is Not On

Display / Status	Recommended Corrective Action
StA 15 Limit Open	Waiting for Limit to Open. - Check Flame Rollout Switch, in the event of excessive blockage of the boiler section flue passageways is developed the flame rollout switch will open interrupting power to control P5-4. The main burners will be extinguished immediately and the circulator will remain on until the thermostat is turned off. If the flame rollout switch is activated, do not attempt to place the boiler in operation. The source of the blockage must be corrected and the identical flame rollout switch replaced by trained and skilled personnel from a qualified service agency. - Check External Limit.

5. Circulator is On, Blower is On but Boiler Fails to Start

Display / Status	Description
StA 10 Retry / Recycle Delay	The Boiler is in "Retry Delay": - The burner failed to light (no flame signal). After a 5 minute delay, control will attempt to light the burner again. There is no limit to the number of retries. Recycle Delay - The burner loses flame during running mode, "StA 8". After a 10 second delay, control will attempt to light the burner again. If the burner loses flame during running mode, "StA 8" during the next six recycles, control will progress to a soft lockout.
StA 11 Pressure Switch Failed to Open	Refer to Troubleshooting Section, Err 2 for corrective action.
StA 12 Pressure Switch Failed to Close	Refer to Troubleshooting Section, Err 29 for corrective action.
StA 13 Soft Lockout	When a soft lockout occurs, boiler will shut down. Boiler automatically restarts once condition that caused the lockout is corrected and the one-hour time delay is completed. Boiler can be restarted sooner than the time delay by entering Adjustment Mode and selecting the reset button (see Adjustment Mode instructions) or by cycling power. Soft Lockout is caused by one of the following: - Err 63, Maximum Recycles Exceeded – The burner lost flame during running mode, "StA 8" six times in a row. Refer to recommended corrective actions on next page to help determine the cause of the problem. - Err 64, Internal Failure, refer to Error code listing for recommended corrective action. - Err 23, Flame sensed during post-purge (before gas valve signaled open). Check the gas valve for proper operation. Replace gas valve is problem persists.
StA 14 Hard Lockout	When a hard lockout occurs boiler shuts down.
StA 16 Flame Out of Sequence	If flame is detected in pre-purge control goes to Flame Out of Sequence Before trial, "StA 16" and "Err 23" is reported. The control gives a flame 10 seconds to disappear. If flame goes away, control resumes heating cycle from the beginning. If it doesn't "Err 23" is cleared and "Err 6" is reported. When flame is off control goes to Soft Lockout and "Err 6" is cleared. Check gas valve for proper operation.

6. Circulator is On, Blower is On but Boiler Fails to Start (continued)

Display / Status	Recommended Corrective Action
StA 10 Retry / Recycle Delay StA 13 Soft Lockout	**1. No Spark** a. Can you hear sparking while StA 6 is displayed? - If there is no spark noise replace the control. b. If you can hear spark noise check the following: - Loose connection in ignition cable or ground wire - Continuity of ignition cable - Break in ignition cable insulation - Loose ground connection - Break in pilot ceramic insulator - Incorrect pilot spark gap
	2. No Pilot Flame a. If pilot does not light check the following: - All manual gas valves are open - Supply tubing is not plugged, kinked or leaking - Gas line pressures are good - Gas line is purged of air - Pilot orifice is not plugged (pilot gas is flowing) - Condensate quenching pilot **Note**: It may be necessary to recycle the “call for heat” more than once to clear the pilot supply tubes of air. b. If no gas flow check the following: - 24 volts across PV and MV/PV at gas valve, if voltage ok replace defective gas valve - Check for break in wiring harness to gas valve - 24 volts across control connector P5–2 and P5–5, if no voltage at control replace defective control
	3. Spark does Not Stop When Pilot Lights If the spark does not stop when the pilot lights check the following: - Loose connection in ignition cable or ground wire - Continuity of ignition cable - Clean flame rod - Pilot electrode porcelain cracked - Pilot flame covers flame rod and is steady and blue, if not adjust pilot flame - Low gas pressure at gas valve inlet - Defective control
	4. Main Flame Does Not Light If the main burners do not light check the following: - Check orifice size and/or blockage - 24 volts across control terminals P5-8 and P5-5? If no voltage while in StA 7 defective control. - 24 volts across MV and MV/PV at gas valve? Check for break in wiring harness to gas valve - Defective gas valve

XI. SERVICE

DANGER

This boiler uses flammable gas, high voltage electricity, moving parts, and very hot water under high pressure. Assure that all gas and electric power supplies are off and that the water temperature is cool before attempting any disassembly or service.

Do not attempt any service work if gas is present in the air in the vicinity of the boiler. Never modify, remove or tamper with any control device.

Important Product Safety Information
Refractory Ceramic Fiber Product

Warning:

The Repair Parts list designates parts that contain refractory ceramic fibers (RCF). RCF has been classified as a possible human carcinogen. When exposed to temperatures about 1805°F, such as during direct flame contact, RCF changes into crystalline silica, a known carcinogen. When disturbed as a result of servicing or repair, these substances become airborne and, if inhaled, may be hazardous to your health.

AVOID Breathing Fiber Particulates and Dust

Precautionary Measures:

Do not remove or replace RCF parts or attempt any service or repair work involving RCF without wearing the following protective gear:

1. A National Institute for Occupational Safety and Health (NIOSH) approved respirator
2. Long sleeved, loose fitting clothing
3. Gloves
4. Eye Protection

- Take steps to assure adequate ventilation.
- Wash all exposed body areas gently with soap and water after contact.
- Wash work clothes separately from other laundry and rinse washing machine after use to avoid contaminating other clothes.
- Discard used RCF components by sealing in an airtight plastic bag. RCF and crystalline silica are not classified as hazardous wastes in the United States and Canada.

First Aid Procedures:

- If contact with eyes: Flush with water for at least 15 minutes. Seek immediate medical attention if irritation persists.
- If contact with skin: Wash affected area gently with soap and water. Seek immediate medical attention if irritation persists.
- If breathing difficulty develops: Leave the area and move to a location with clean fresh air. Seek immediate medical attention if breathing difficulties persist.
- Ingestion: Do not induce vomiting. Drink plenty of water. Seek immediate medical attention.

WARNING

This boiler must only be serviced and repaired by skilled and experienced service technicians.

If any controls are replaced, they must be replaced with identical models.

Read, understand and follow all the instructions and warnings contained in all the sections of this manual.

Never jump out or bypass any safety or operating control or component of this boiler.

Read, understand and follow all the instructions and warnings contained in ALL of the component instruction manuals.

Assure that all safety and operating controls and components are operating properly before placing the boiler back in service.

Keep boiler area free and clear of combustible materials, gasoline and other flammable vapors and liquids.

Do not place any obstructions in boiler room that hinder flow of combustion and ventilation air.

A. General. Inspection and service should be conducted annually. Turn off electrical power and gas supply while conducting service or maintenance. Follow instructions TO TURN OFF GAS TO APPLIANCE. See Figure 22.

CAUTION

Label all wires prior to disconnection when servicing controls. Wiring errors can cause improper and dangerous operation. Verify proper operation after servicing.

B. Low water cutoff (if so equipped).

Probe Type (Annual Service). Probe type LWCO should be removed once a year, examined and cleaned of any dirt accumulations to assure proper operations. Do not attempt to repair mechanisms in the field. Complete replacement mechanisms, including necessary gaskets and installation instructions, are available from the manufacturer.

C. Vent System. Inspect for obstructions, soot accumulation, proper support, and deterioration of pipe, fittings, and joints.

1. Clean terminal screens. Terminals must be free of obstruction, undamaged, with screens securely in place.
2. Terminal and wall thimbles (if used) must be weathertight. Penetration through wall must prevent entry of combustion products into building.
3. Pipe must be full round shape, and show no damage from impact or excessive temperature.
4. Pipe must be supported at minimum five (5) foot (1.5 m) intervals and must not sag.
5. All vent joints must be secure and watertight.
6. All joints must be secure and airtight. Horizontal vent tee drain or vertical vent tee drain (if used) must have minimum 6 inch trap and allow condensate to flow freely. To Clean:
   a. Disconnect drain tube from drain fitting.
   b. Flush drain tube with water. Fill trap with water.
   c. Securely fasten drain tube to drain fitting, providing gas-tight and watertight seal.
7. If pipe must be disassembled for removal of obstructions or resealing of joint, see Section III, Paragraph C.

D. Boiler Flue Passages. Inspect for blockage or soot accumulation.

1. Remove Main Burners. See Figure 29.
   a. Remove front door.
   b. Disconnect pilot tubing and pilot lead wires at the gas valve.
   c. Remove wires to Flame Roll-out Switch.
   d. Remove Burner Access Panel.
   e. Mark location of Main Burner with Pilot Bracket on gas manifold.
   f. Hold Main Burner on throat. Lift front of burners to clear orifice. Burner which holds pilot can be removed by lifting the burner adjacent to its right first.
2. Disconnect Vent Connector and Vent Pipe from Blower Outlet.
3. Remove Jacket Top Panel.
4. Disconnect the Black and Gray Silicone Tubing from the Canopy.
5. Disconnect Wiring Harness from Blower Motor.
6. Remove Canopy/Blower Assembly.
   a. Loosen the (4) screws from Canopy.
7. Remove Flue Gas Baffles. Inspect Flue Gas Baffles for deterioration.
8. Inspect flue passages. Clean with flue brush. See Figure 29.

9. Inspect heating surface in combustion chamber. Clean with straight handle wire brush.
10. Install Flue Gas Baffles.
11. Replace Canopy Assembly and seal.
12. Connect Silicone Tubing between Pressure Fittings on Canopy Assembly and Pressure Switch. Route through bushings in Vestibule Panel . See Figure 27.
13. Install Jacket Top Rear Panel.
14. Connect vent system. See Figure 28.
15. Connect Blower Motor Wiring Harness

E. Main Burners and Firebox.

1. Vacuum firebox. Exercise care - do not damage base insulation.
2. Clean main burners. Brush top of burners with soft bristle brush. See Figure 29. Vacuum to remove any dirt and lint.
3. Vacuum tip of pilot burner.
4. Check gas orifices for lint and dirt. Clean as necessary.
5. Install main burners by reversing procedure to remove burners.
   a. Pilot burner must be installed in original location. See Table 16.
   b. Main burners must be properly secured in burner tray slot at rear of firebox and over gas orifice. See Figure 29.

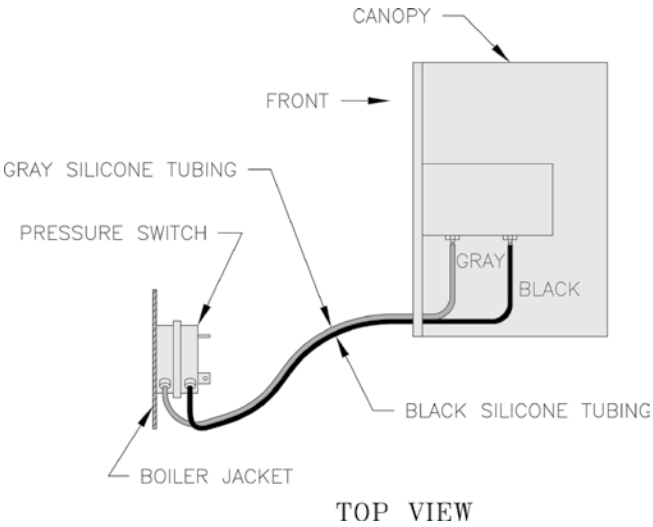

Figure 27: Silicone Tubing Assembly

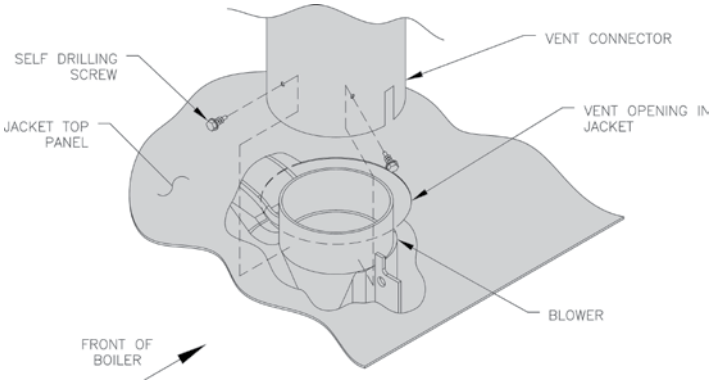

Figure 28: Blower Vent Connector Assembly

   c. Pilot gas supply and pilot lead wires must be reconnected.
   d. Burner access panel must be securely in place.
   e. Reconnect Flame Roll-out wires.

F. Check operation. Follow steps F through N from Section VIII: System Start-up.

G. Procedure for measuring differential pressure (See Figure 30).

1. With boiler off, remove Gray and Black Hoses at differential pressure switch.
2. With tees and ¼ inch aluminum stubs, connect water manometer as shown with additional tubing.
3. Start boiler and read Pressure on Manometer when boiler water temperature reaches operating temperature. Refer to Table 17 for minimum readings.

   NOTE: If switch drops-out before boiler reaches temperature or if pressure differential readings are below minimums shown in Table 17, check for cracks in hose or contact your nearest New Yorker representative.
4. Stop boiler, remove manometer and reconnect hoses to differential pressure switch. See Figures 27 and 30.

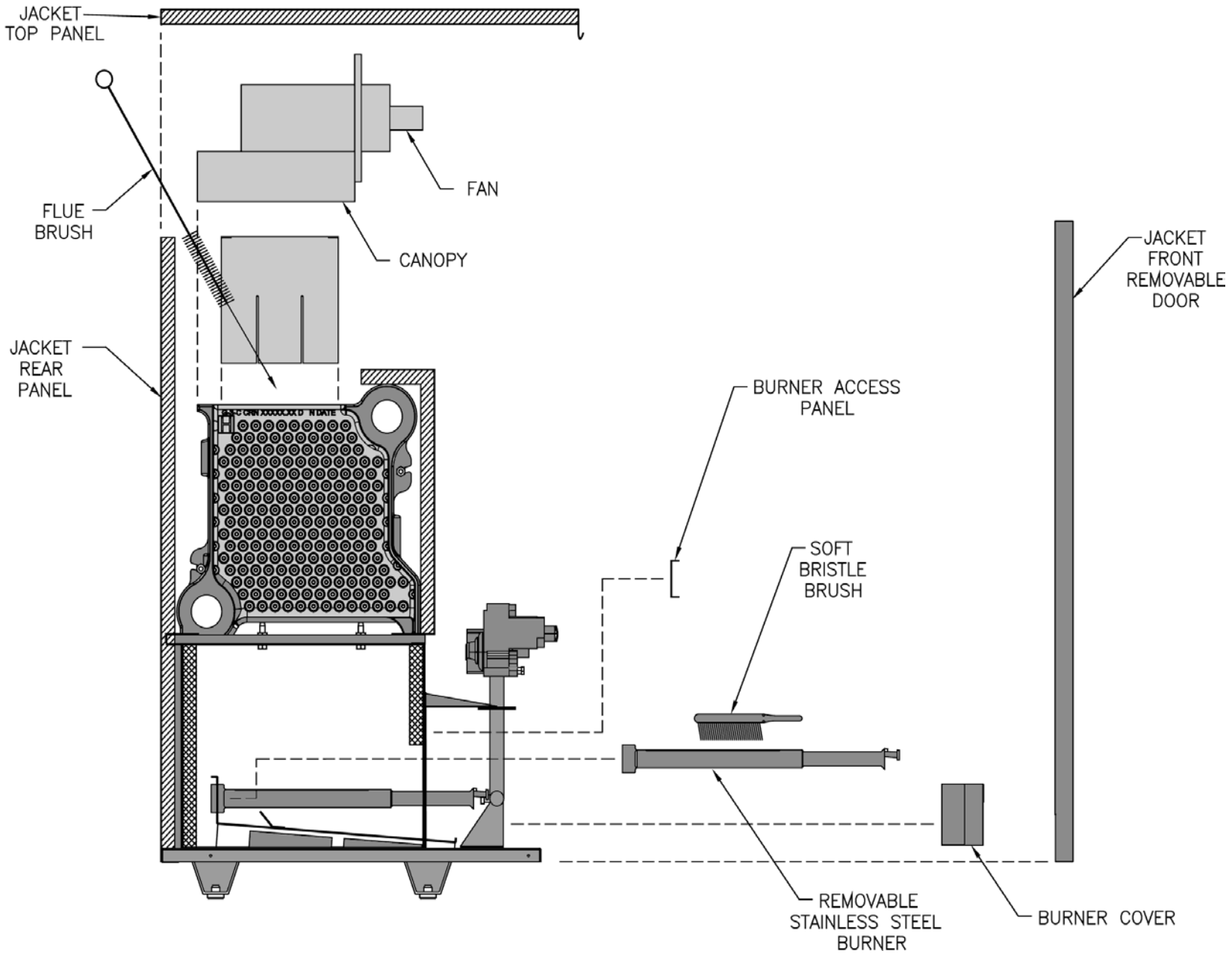

Figure 29: Flue and Burner Cleanout, 1" Burner

Table 16: Pilot Burner Location

Model	Main Burner with Pilot Bracket	Pilot Burner Located Between Main Burners *
PVCG30B	2	2 & 3
PVCG40B	3	3 & 4
PVCG50B	4	4 & 5
PVCG60B	5	5 & 6
PVCG70B	6	6 & 7
PVCG80B	7	7 & 8
PVCG90B	8	8 & 9

* Main burners numbered left to right as viewed from front of boiler.

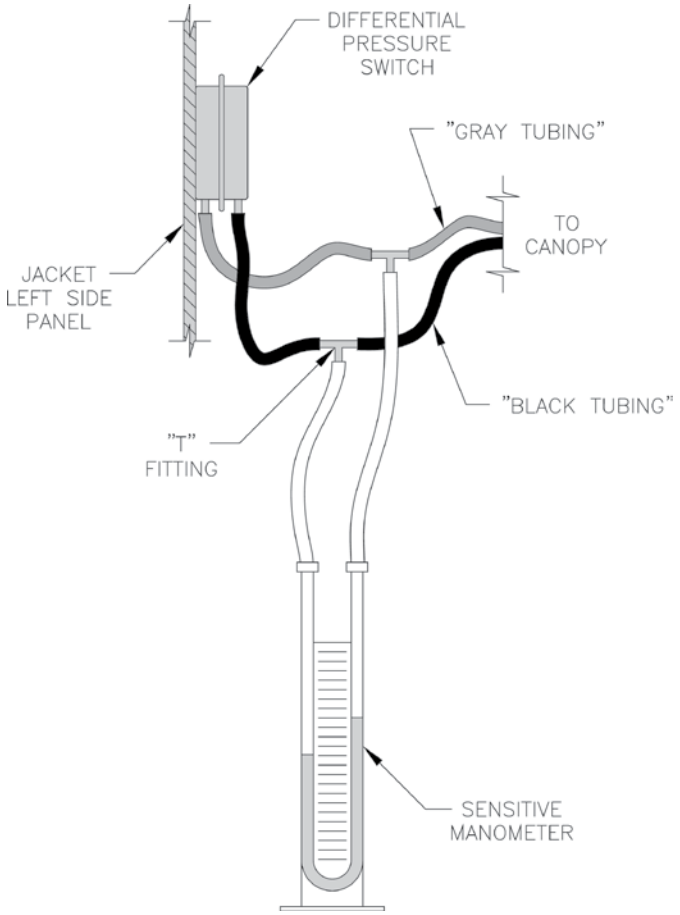

Figure 30: Differential Pressure Measurement

Table 17: Differential Pressure Switch Settings

Model	Minimum Differential Pressure	
	Sea Level to 4,999 Ft. (Natural Gas)	Sea Level to 4,999 Ft. (LP Gas)
PVCG30B	1.32" w.c.	1.32" w.c.
PVCG40B	1.17" w.c.	1.17" w.c.
PVCG50B	1.47" w.c.	1.17" w.c.
PVCG60B	1.25" w.c.	.88" w.c.
PVCG70B	1.00" w.c.	.80" w.c.
.PVCG80B	1.00" w.c.	.88" w.c.
PVCG90B	1.00" w.c.	.88" w.c.

XII. REPAIR PARTS

All PVCG-B™ Repair Parts may be obtained through your local New Yorker Wholesale distributor. Should you require assistance in locating a New Yorker distributor in your area, or have questions regarding the availability of New Yorker products or repair parts, please contact New Yorker Customer Service at (215) 855-8055 or Fax (215) 855-8229.

XII. REPAIR PARTS (continued)

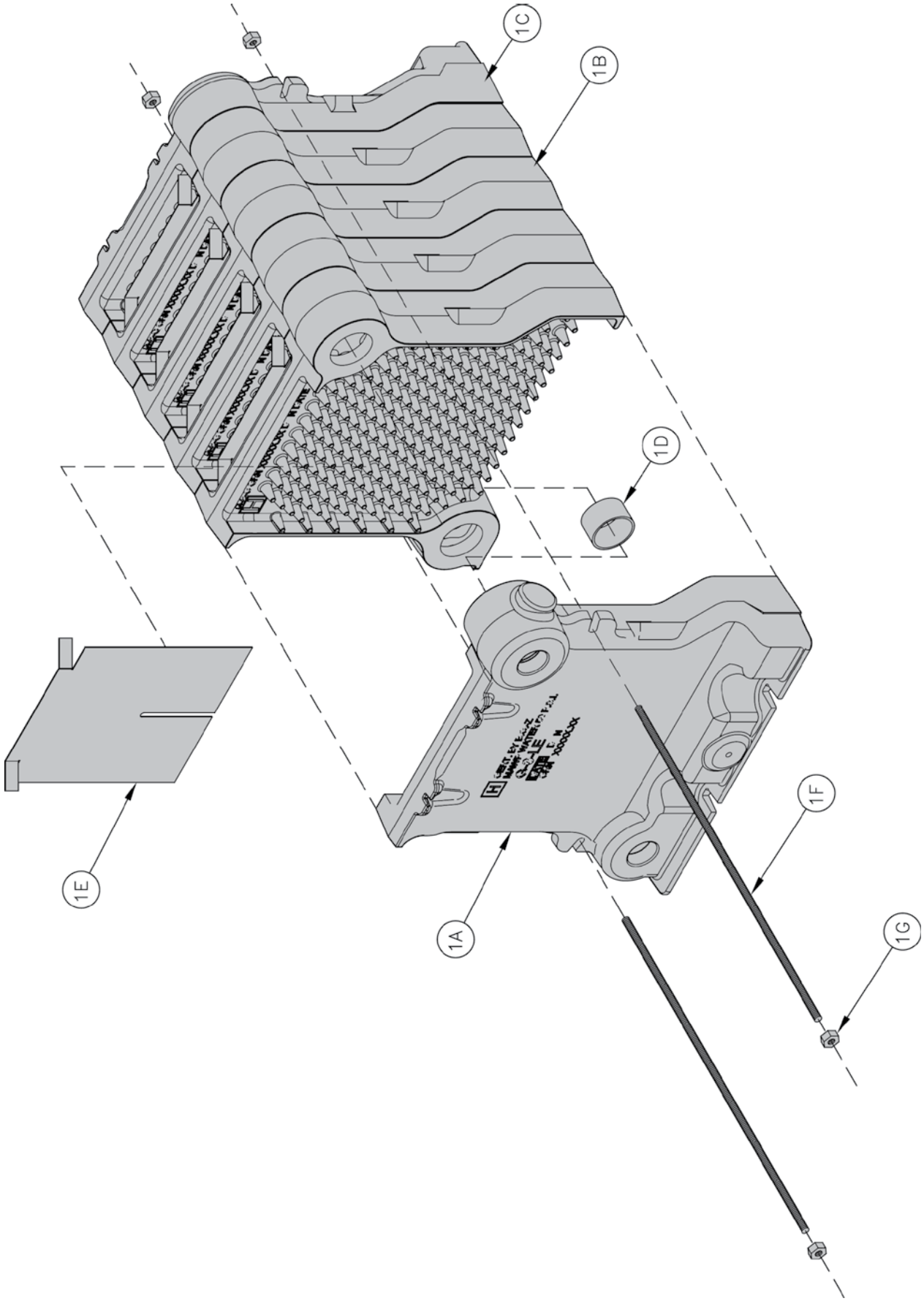

XII. REPAIR PARTS (continued)

Key No.	Description	[Quantity] Part Number						
		PVCG30B	PVCG40B	PVCG50B	PVCG60B	PVCG70B	PVCG80B	PVCG90B
1. CASTING ASSEMBLY								
1	Section Assembly	61707031	61707041	61707051	61707061	61707071	61707081	61707091
1A	Left End Section	71707001						
1B	Center Section	[1] 71707003	[2] 71707003	[3] 71707003	[4] 71707003	[6] 71707003	[6] 71707003	[7] 71707003
1C	Right End Section	71707002						
1D	Slip Nipple, #3	[4] 806600009	[6] 806600009	[8] 806600009	[10] 806600009	[12] 806600009	[14] 806600009	[16] 806600009
1E	Flue Gas Baffle	[2] 71107002	[3] 71107002	[4] 71107002	[5] 71107002	[6] 71107002	[7] 71107002	[8] 71107002
1F	Tie Rod, ¼” -20	[2] 100109-01	[2] 100108-05	[2] 100108-07	[2] 100108-13	[2] 100108-14	[2] 100108-15	[2] 100108-16
1G	Hex Nut, ¼” -20	[4] 80860407						

XII. REPAIR PARTS (continued)

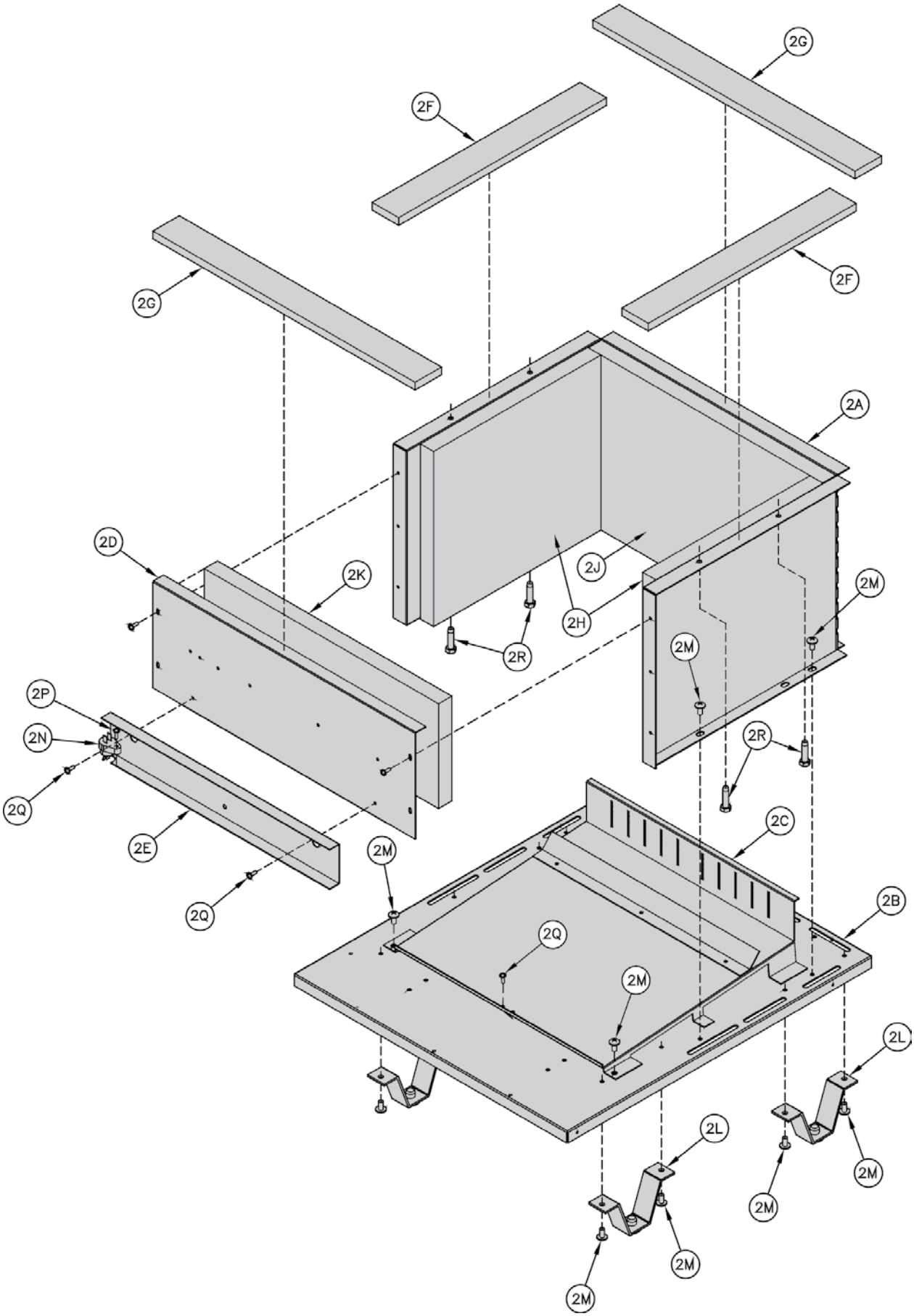

XII. REPAIR PARTS (continued)

Key No.	Description	[Quantity] Part Number						
		PVCG30B	PVCG40B	PVCG50B	PVCG60B	PVCG70B	PVCG80B	PVCG90B
2. BASE ASSEMBLY								
2A	Base Wrapper	71807031	71807041	71807051	71807061	71807071	71807081	71807091
2B	Base Tray	71807032	71807042	71807052	71807062	71807072	71807082	71807092
2C	Burner Tray Assembly	61807031	61807041	61807051	61807061	61807071	61807081	61807091
2D	Base Front Panel	102705-03	102705-04	102705-05	102705-06	102705-07	102705-08	102705-09
2E	Burner Access Panel	102707-03	102707-04	102707-05	102707-06	102707-07	102707-08	102707-09
2F	Cerafelt Gasket 1/2” x 2”	6206002						
2G	Cerafelt Gasket 1/2” x 2”	6206002						
2H	Base Side Insulation	[2] 72007001						
2J	Base Rear Insulation	72007031	72007041	72007051	72007061	72007071	72007081	72007091
2K	Base Front Insulation	72007032	72007042	72007052	72007062	72007072	72007082	72007092
2L	Base Leg Assembly	[4] 6186001						
2M	Self Tapping Screw, 1/4” -20 x 1/2”	[18] 80860700						
2N	Flame Roll-out Switch	80160044						
2P	Sheet Metal Screw, #8 x 3/4”	80860030						
2Q	Self Tapping Screw, 10-32 x 3/8”	[5] 80860705			[6] 80860705		[7] 80860705	
2R	Self Tapping Screw Hex Cap, 5/16 - 18 x 1-1/4”	[4] 80860717						

XII. REPAIR PARTS (continued)

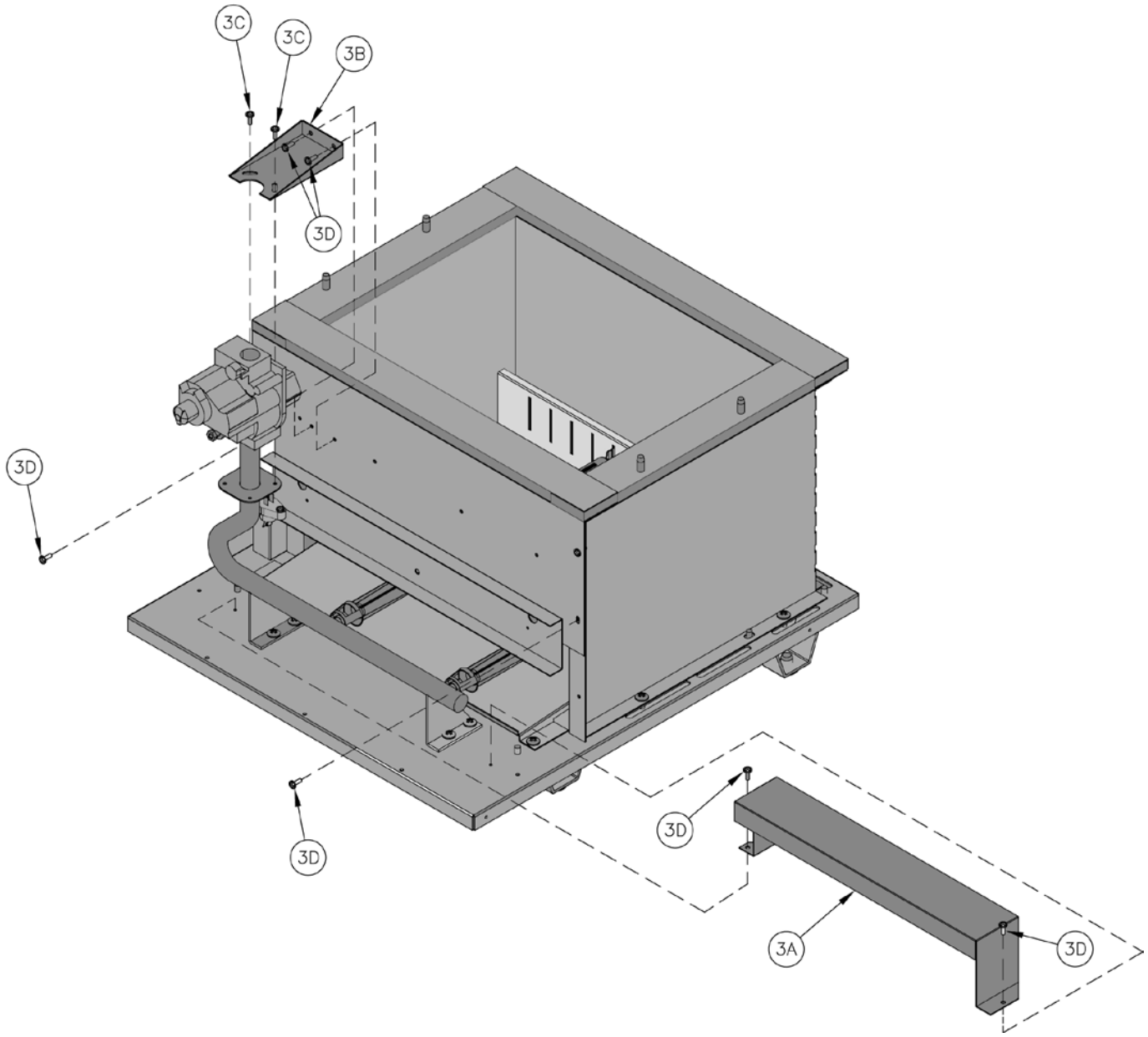

Key No.	Description	[Quantity] Part Number						
		PVCG30B	PVCG40B	PVCG50B	PVCG60B	PVCG70B	PVCG80B	PVCG90B
3. BASE ASSEMBLY								
3A	Burner Cover (Natural Gas Only)	102033-03	102033-04	102033-05	102033-06	102033-07	102033-08	102033-09
3B	Manifold Support Bracket	718070001						
3C	Sheet Metal Screw, #8 x 1/2”	[2] 80860000						
3D	Self Tapping Screw, 10-32 x 3/8”	[6] 80860705						

XII. REPAIR PARTS (continued)

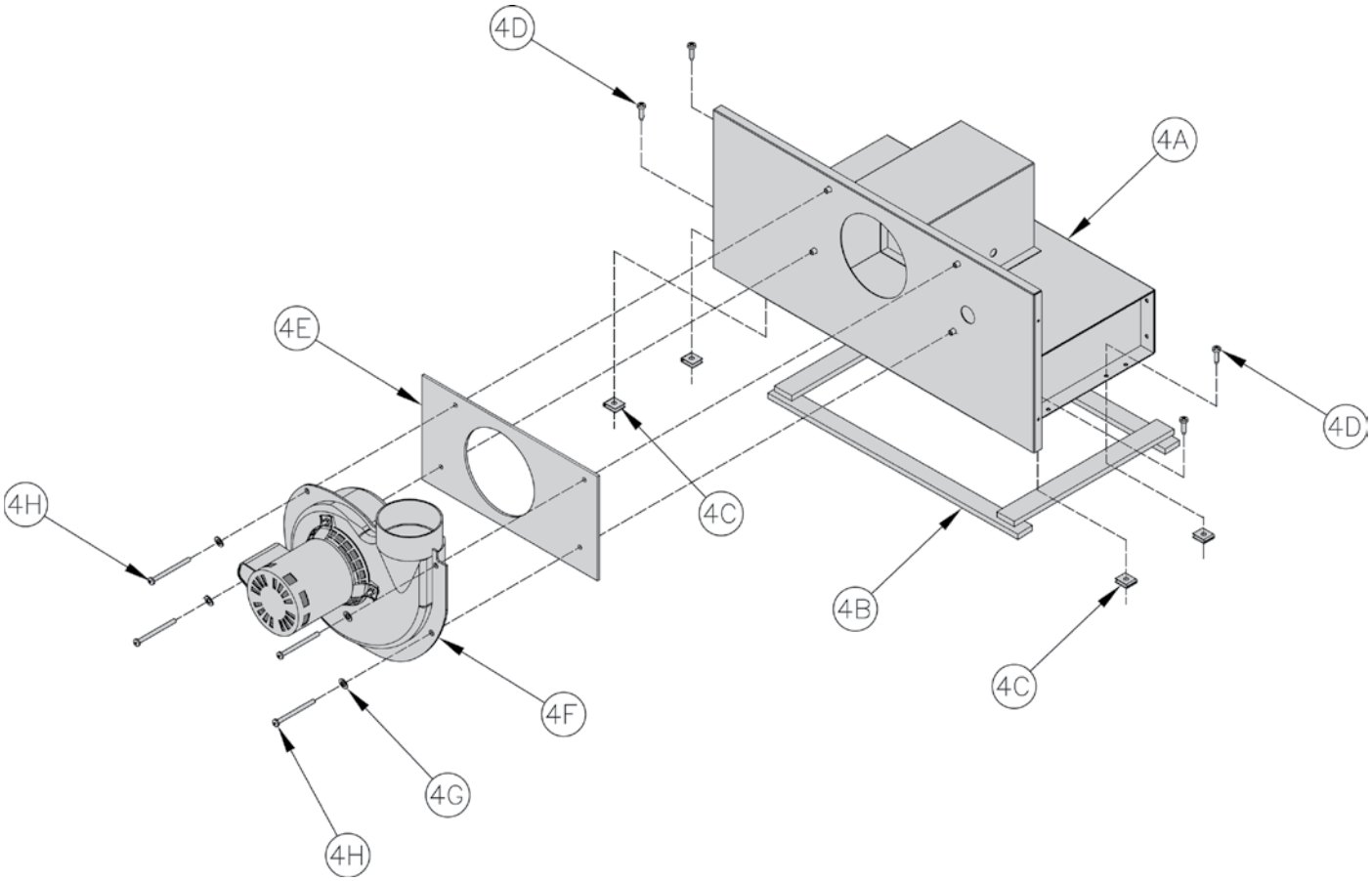

Key No.	Description	[Quantity] Part Number						
		PVCG30B	PVCG40B	PVCG50B	PVCG60B	PVCG70B	PVCG80B	PVCG90B
4. FAN/CANOPY ASSEMBLY								
4A	Canopy Assembly - Sea Level	61107031	61107041	61107051	61107061	61107071	61107081	61107091
	Canopy Assembly - High Altitude	61107032	61107042	61107052	61107062	61107072	61107082	61107092
4B	Cerafelt	9206005						
4C	U-Clip	[4] 80861512						
4D	Sheet Metal Screw, #10 x 1”	[4] 808600141						
4E	Fan Gasket	8206085						
4F	Fan	81161512						
4G	Lock Washer, #10	[4] 80860636						
4H	Machine Screw, #10-24 x 2-1/2”	[4] 808608982						

XII. REPAIR PARTS (continued)

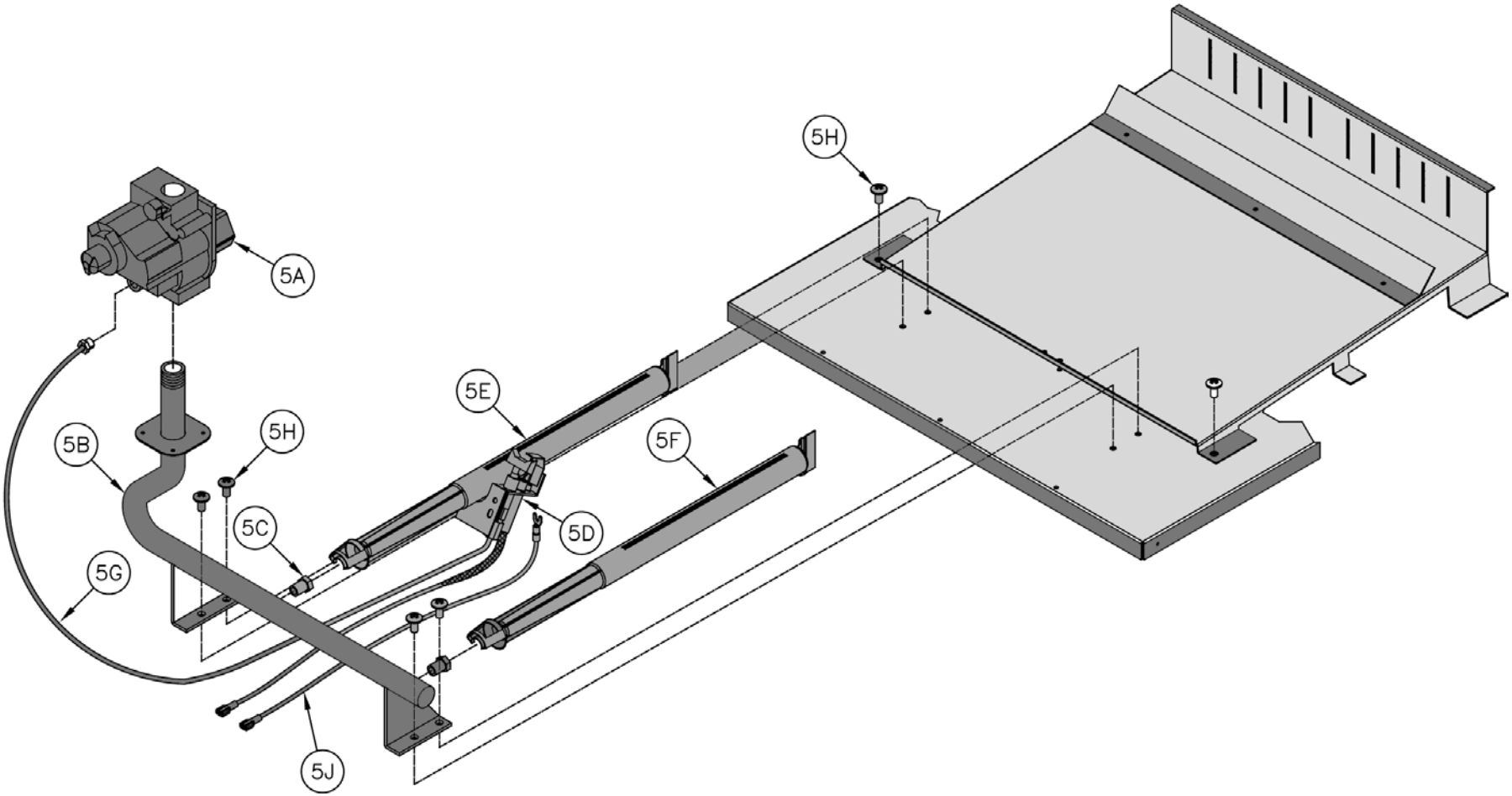

XII. REPAIR PARTS (continued)

Key No.	Description	[Quantity] Part Number						
		PVCG30B	PVCG40B	PVCG50B	PVCG60B	PVCG70B	PVCG80B	PVCG90B
5. BURNER ASSEMBLY								
5A	Gas Valve (Natural Gas), Honeywell VR8204P1171	81660282				N/A		
	Gas Valve (Natural Gas), Honeywell VR8304P4496	N/A				81660283		
	Gas Valve (LP Gas), Honeywell VR8204C3015	81660146				N/A		
	Gas Valve (LP Gas), Honeywell VR8304P4280	N/A				81660181		
5B	½" Gas Manifold	82207031	82207041	82207051	82207061	---	---	---
	¾" Gas Manifold	---	---	---	---	82207071	82207081	82207091
5C	Burner Orifices - Natural Gas #47	[4] 822710	[6] 822710	[8] 822710	[10] 822710	[12] 822710	[14] 822710	[16] 822710
	Burner Orifices - LP Gas #56	[4] 822707	[6] 822707	[8] 822707	[10] 822707	[12] 822707	[14] 822707	[16] 822707
5D	Pilot Assembly - Natural Gas	103704-01						
	Pilot Assembly - LP Gas	103705-01						
5E	Burner w/ Pilot Bracket	100147-01						
5F	Main Burner	[3] 100146-01	[5] 100146-01	[7] 100146-01	[9] 100146-01	[11] 100146-01	[13] 100146-01	[15] 100146-01
5G	Pilot Tubing	8236122						
5H	Self Tapping Screw, ¼ - 20 x ½"	[6] 80860700						
5J	Ground Wire Assembly	103776-01						

XII. REPAIR PARTS (continued)

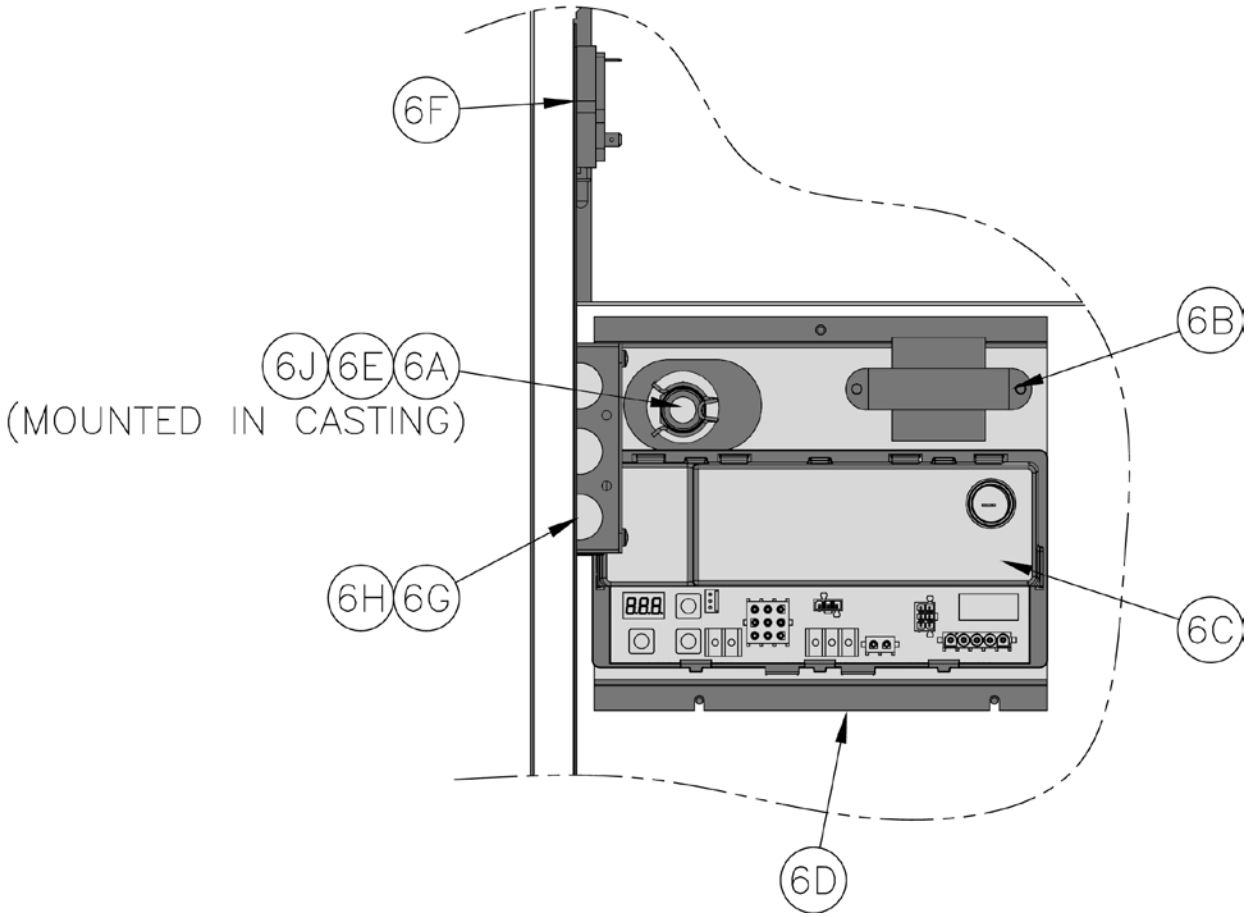

Key No.	Description	[Quantity] Part Number						
		PVCG30B	PVCG40B	PVCG50B	PVCG60B	PVCG70B	PVCG80B	PVCG90B
6. CONTROL PANEL ASSEMBLY								
6A	Limit Rated Temperature Sensor, 12”, Honeywell 50001464-001	103195-01						
6B	Transformer, Honeywell AT140B1297	102516-01						
6C	Boiler Control, Induced Draft, Honeywell S9361A2075	103661-01						
6D	Control Panel	103727-01						
6E	Temperature Sensor Clip	102422-01						
6F	Differential Pressure Switch Sea Level 0’ - 4,999’ (Natural Gas)	80160762	80160761	104576-01	104575-01	104730-01		
	Differential Pressure Switch Sea Level 0’ - 4,999’ (LP Gas)			80160761	80160760	80160759	80160760	
6G	Junction Box 4” x 4” x 1½”	8136259						
6H	Junction Box Cover	8136180						
6J	½” Immersion Well, Honeywell 123869A	80160456						

XII. REPAIR PARTS (continued)

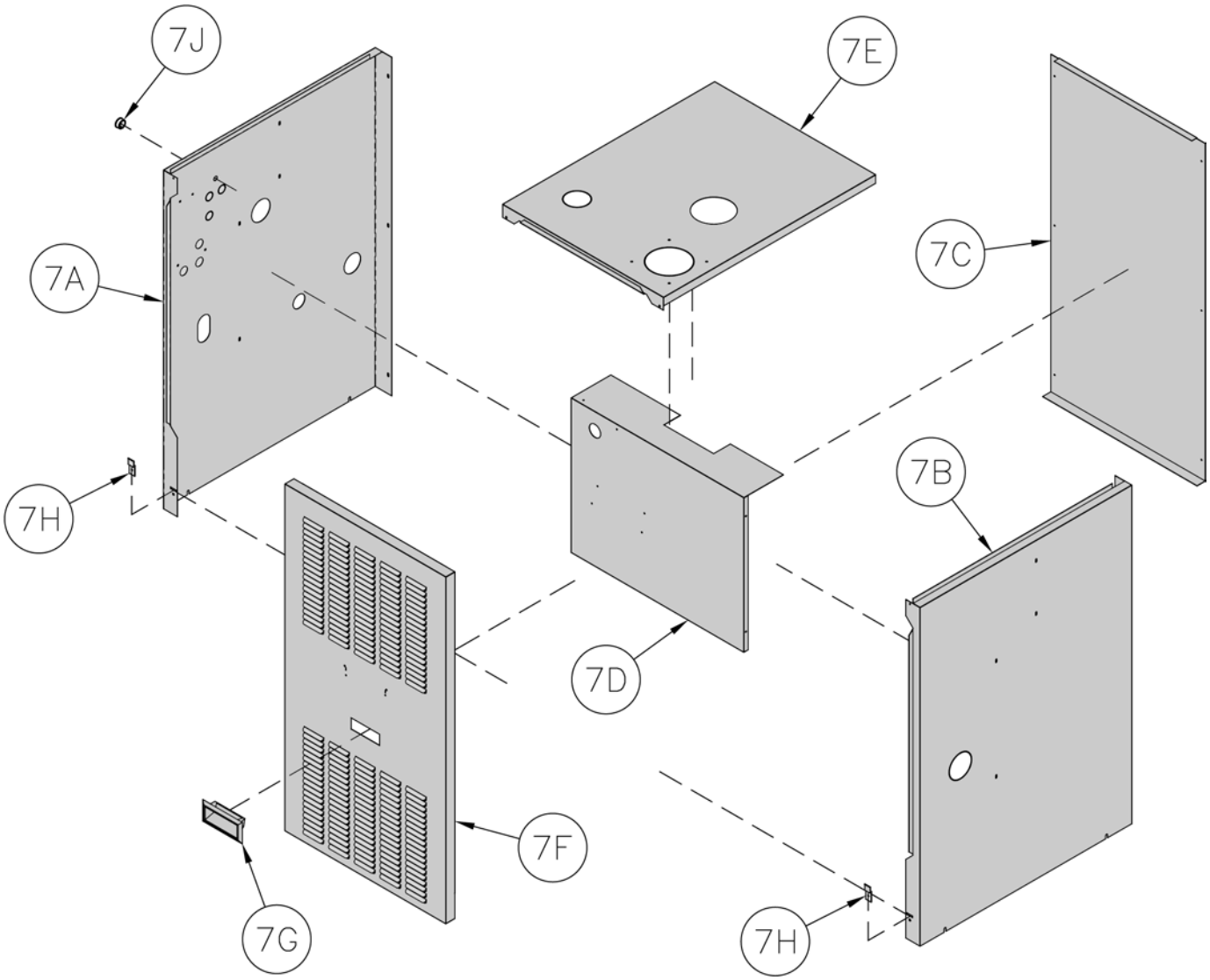

Key No.	Description	[Quantity] Part Number						
		PVCG30B	PVCG40B	PVCG50B	PVCG60B	PVCG70B	PVCG80B	PVCG90B
7. JACKET PARTS								
7A	Left Side Panel	60407002						
7B	Right Side Panel	60407001						
7C	Rear Panel	60407033	60407043	60407053	60407063	60407073	60407083	60407093
7D	Vestibule Panel	60407034	60407044	60407054	60407064	60407074	60407084	60407094
7E	Top Panel	60407032	60407042	60407052	60407062	60407072	60407082	60407092
7F	Front Door	104148-03	104148-04	104148-05	104148-06	104148-07	104148-08	104148-09
7G	Handle	8056184						
7H	Door Clip	[2] 7041921						
7J	Bushing	8136048						

XII. REPAIR PARTS (continued)

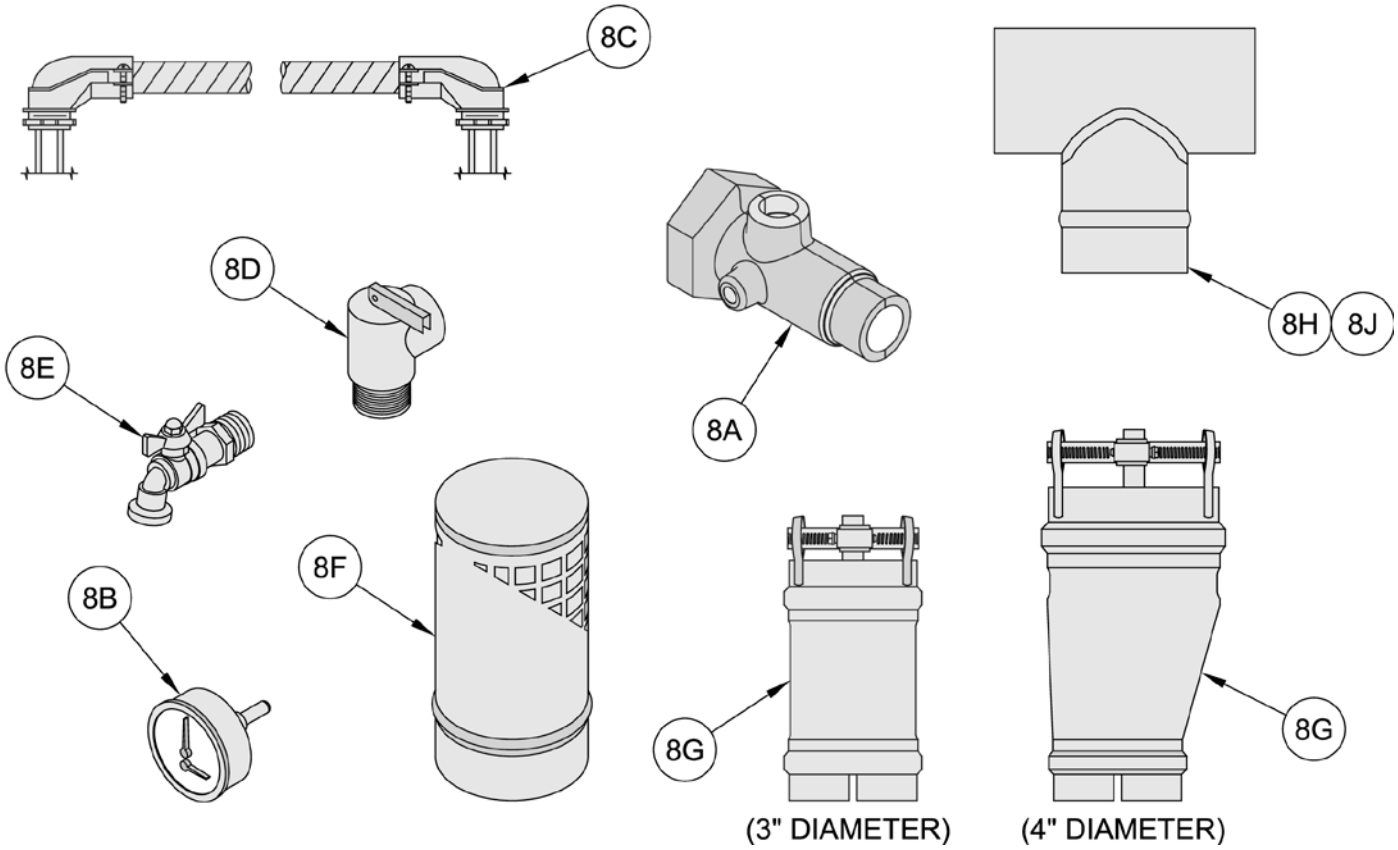

Key No.	Description	[Quantity] Part Number						
		PVCG30B	PVCG40B	PVCG50B	PVCG60B	PVCG70B	PVCG80B	PVCG90B
8. MISCELLANEOUS PARTS CARTON								
8A	Water Manifold	80607001						
8B	Temperature/Pressure Gauge	100282-01						
8C	Circulator Wiring Harness	6130701						
8D	Safety Relief Valve	81660363						
8E	Boiler Drain Valve	806603061						
8F	Vent Terminal	8110701					N/A	
8G	Vent Connector	8110703					8110704	
8H	Vent Tee AL294C, 3”	N/A				8116310	N/A	
8J	Vent Tee AL294C, 4”	N/A					8116313	

SERVICE RECORD

DATE	SERVICE PERFORMED

SERVICE RECORD

DATE	SERVICE PERFORMED

SERVICE RECORD

DATE	SERVICE PERFORMED

NEW YORKER BOILER CO., INC.

Limited Warranties

For Residential Cast Iron and Steel Boilers

By this Warranty Statement New Yorker Boiler Co., Inc. ("New Yorker"), issues limited warranties subject to the terms and conditions stated below. These limited warranties apply to residential cast iron and steel water boilers labeled with the New Yorker® brand which are sold on or after March 1, 2004.

ONE YEAR LIMITED WARRANTY

One Year Limited Warranty for Residential Water Boilers New Yorker warrants to the original consumer purchaser at the original installation address that its residential cast iron and steel water boilers will be free from defects in material and workmanship under normal usage for a period of one year from the date of original installation. In the event that any defect in material or workmanship is found during the one year period following the date of installation, New Yorker will, at its option, repair the defective part or provide a replacement free of charge, F.O.B. its factory.

WC BOILER FIVE YEAR LIMITED WARRANTY

Five Year Pressure Vessel Limited Warranty for WC™ Residential Water Boilers New Yorker warrants to the original consumer purchaser at the original installation address that the pressure vessel of the boiler will be free of defects in material and workmanship under normal usage for a period of five years following the date of installation. In the event that any defect in material or workmanship is found during the five year period following the date of installation, New Yorker will, at its option, repair the defective pressure vessel or provide a replacement free of charge, F.O.B. its factory.

LIFETIME LIMITED WARRANTY

For all gas/oil-fired residential boilers, New Yorker warrants to the original consumer purchaser at the original installation address that the heat exchanger of the boiler will be free of defects in material and workmanship under normal usage for the lifetime of the original consumer purchaser. In the event that any defect in material or workmanship is found during the ten year period following the date of installation, New Yorker will, at its option, repair the defective pressure vessel or provide a replacement free of charge, F.O.B. its factory. In the event that any defect in material or workmanship is found after the tenth year following the date of installation, New Yorker will provide a replacement pressure vessel upon payment by the original consumer purchaser of an amount equal to a percentage of the then current retail price of the model boiler involved (or, in the event that such model is not then in production, the most comparable model then in production), as follows:

	Service Charge as a % of Retail Price																					
Years in Service	1-5	6	7	8	9	10	11	12	13	14	15	16	17	18	19	20	21	22	23	24	25+
WC Boilers	N/C	100																			
Water Boilers	No Charge						5	10	15	20	25	30	35	40	45	50	55	60	65	70	75
Steam Boilers	No Charge						100														

EXCEPTIONS AND EXCLUSIONS

1. **Components Manufactured by Others** - following the expiration of the foregoing one year limited warranty, all component parts of a boiler which are manufactured by others (such as burners, burner controls, circulator, tankless water heater, and New Yorker Link) shall be subject only to the manufacturer's warranty, if any.
2. **Removal and Replacement Costs** -these warranties do not cover expenses of removal or reinstallation. The consumer purchaser will be responsible for the cost of removing and replacing any defective part and all labor and related materials connected therewith. Replacement parts will be invoiced to the distributor in the usual manner and will be subject to adjustment upon proof of defect.
3. **Proper Installation** - these warranties are conditioned upon the installation of the boiler in strict compliance with New Yorker's Installation, Operating and Service Instructions. New Yorker specifically disclaims any liability of any kind which arises from or relates to improper installation.
4. **Improper Use or Maintenance** - these warranties will not be applicable if the boiler is used or operated over its rated capacity, is installed for uses other than home heating, or is not maintained in accordance with New Yorker's Installation, Operating and Service Instructions and hydronics industry standards.
5. **Improper Operation** - these warranties will not be applicable if the boiler has been damaged as a result of being improperly serviced or operated, including but not limited to the following: operated with insufficient water; allowed to freeze; subjected to flood conditions; or operated with water conditions and/or fuels or additives which cause unusual deposits or corrosion or on the pressure vessel or associated controls.
6. **Geographic Limitations** - these warranties apply only to boilers installed within the 48 contiguous United States.
7. **Installation Requirements** - in order for these warranties to be effective:
   a. The boiler must be installed in a single or two-family residential dwelling. This warranty does not apply to boilers installed in apartments for commercial or industrial applications.
   b. The boiler must be installed in strict compliance with New Yorker's Installation, Operating and Service Instructions by an installer regularly engaged in boiler installations.
   c. Boiler sections must not have been damaged during shipment or installation.
   d. The boiler must be vented in accordance with chimney recommendations set forth in New Yorker's Installation, Operating and Service Instructions.
8. **Exclusive Remedy** - New Yorker's obligation in the event of any breach of these warranties is expressly limited to the repair or replacement of any part found to be defective under conditions of normal use.
9. **Limitation of Damages Under no circumstances will New Yorker be liable for incidental, indirect, special or consequential damages of any kind under these warranties, including, without limitation, injury or damage to persons or property and damages for loss of use, inconvenience or loss of time**. New Yorker's liability under these warranties shall under no circumstances exceed the purchase price paid for the boiler involved. Some states do not allow the exclusion or limitation of incidental or consequential damages, so the above limitation or exclusion may not apply to you.
10. **Limitation of Warranty** - these limited warranties are given in lieu of all other express warranties and set forth the entire obligation of New Yorker with respect to any defect in a residential water boiler. New Yorker shall have no express obligations, responsibilities or liabilities of any kind, other than those set forth herein.

ALL APPLICABLE IMPLIED WARRANTIES, IF ANY, INCLUDING ANY WARRANTY OF MERCHANT ABILITY OR FITNESS FOR A PARTICULAR PURPOSE, ARE EXPRESSLY LIMITED DURATION TO A PERIOD OF ONE YEAR, EXCEPT THAT IMPLIED WARRANTIES, IF ANY, APPLICABLE TO THE PRESSURE VESSEL OF A RESIDENTIAL WATER BOILER SHALL BE LIMITED IN DURATION TO THE LESSER OF THE DURATION OF SUCH IMPLIED WARRANTY OR A PERIOD EQUAL TO THE TERM OF THE APPLICABLE EXPRESS WARRANTY

Some states do not allow limitations on how long an implied warranty lasts, so the above limitation may not apply to you.

PROCEDURE FOR OBTAINING WARRANTY SERVICE

Upon discovery of a condition believed to be related to a defect in material or workmanship covered by these warranties, the original consumer purchaser should notify the installer, who will in turn notify the distributor. If this action is not possible or does not produce a prompt response, the original consumer purchaser should write to New Yorker Boiler Co., Inc. at P.O. Box 10, Hatfield, PA 19440-0010, giving full particulars in support of the claim.

The original consumer purchaser is required to make available for inspection by New Yorker or its representatives the parts claimed to be defective and, if requested by New Yorker, to ship those parts prepaid to New Yorker at the above address for inspection or repair. In addition, the original consumer purchaser agrees to make all reasonable efforts to settle any disagreement arising in connection with any warranty claim before resorting to legal remedies in the courts.

THIS WARRANTY GIVES YOU SPECIFIC LEGAL RIGHTS AND YOU MAY ALSO HAVE OTHER RIGHTS WHICH VARY FROM STATE TO STATE.

New Yorker®
RESIDENTIAL HEATING BOILERS