AF/AFG

Oil Burner Manual

Beckett™

RESIDENTIAL BURNERS

c UL US

⚠ WARNING **Potential for Fire, Smoke and Asphyxiation Hazards**

Incorrect installation, adjustment, or misuse of this burner could result in death, severe personal injury, or substantial property damage.

To the Homeowner or Equipment Owner:

- Please read and carefully follow all instructions provided in this manual regarding your responsibilities in caring for your heating equipment.
- Contact a professional, qualified service agency for installation, start-up or service work.
- Save this manual for future reference.

To the Professional, Qualified Installer or Service Agency:

- Please read and carefully follow all instructions provided in this manual before installing, starting, or servicing this burner or heating system.
- The Installation must be made in accordance with all state and local codes having jurisdiction.

To the Owner:

Thank you for purchasing a Beckett burner for use with your heating appliance. Please pay attention to the Safety Warnings contained within this instruction manual. Keep this manual for your records and provide it to your qualified service agency for use in professionally setting up and maintaining your oil burner.

Your Beckett burner will provide years of efficient operation if it is professionally installed and maintained by a qualified service technician. If at any time the burner does not appear to be operating properly, **immediately contact your qualified service agency** for consultation.

We recommend annual inspection/ service of your oil heating system by a qualified service agency.

Daily – Check the room in which your burner/appliance is installed. Make sure:

- Air ventilation openings are clean and unobstructed
- Nothing is blocking burner inlet air openings
- No combustible materials are stored near the heating appliance
- There are no signs of oil or water leaking around the burner or appliance

Weekly

- Check your oil tank level. Always keep your oil tank full, especially during the summer, in order to prevent condensation of moisture on the inside surface of the tank.

Contents

General Information 3
- Hazard Definitions 3

Remainder of manual to be used ONLY BY QUALIFIED SERVICE TECHNICIANS

Inspect/Prepare Installation Site 6
- Inspect Chimney or Direct Vent System 6
- Combustion air supply 7
- Clearances to burner and appliance 7
- Combustion chamber — Burner retrofitting 7

Prepare the Burner 8
- Low Firing Rate Baffle 8
- Burner fuel unit 8
- Attach air tube (if not already installed) 8
- Nozzle and Pump Pressure 8
- Install burner nozzle (if not already installed) 8
- Check/adjust electrodes 9
- Servicing nozzle line assembly 9

Mount Burner on Appliance 9
- Mounting options 9
- Mounting dimensions 9
- Check/Adjust 'Z' Dimension - 'F' heads 10
- Installing the Oil Tank and Supply System 12

Wire burner 13
- Burner packaged with appliance 13
- Burner installed at jobsite 13
- Special wiring required with covered burners 13

Burner Controls 14
- GeniSys Model 7505 Control 14
- Features 14
- Wiring 14
- Reset Button Operation 16
- Wire Burner 18

Start Up Burner/Set Combustion 18
- Cad Cell Resistance Measurement 18
- Resetting From Restricted or Hard Lockout 18
- Startup / Checkout 19
- Check Safety Features 19
- Set combustion with instruments 19

Perform Regular Maintenance 20
- Shutting the Burner Off 20

Replacement Parts 22

Limited Warranty Information 24

General Information

Hazard Definitions

DANGER **Indicates a hazardous situation, which, if not avoided, will result in death or serious injury.**

WARNING **Indicates a hazardous situation, which, if not avoided, could result in death or serious injury.**

CAUTION **Indicates a hazardous situation, which, if not avoided, could result in minor or moderate injury.**

Within the boundaries of the hazard warning, there will be information presented describing consequences if the warning is not heeded and instructions on how to avoid the hazard.

NOTICE Intended to bring special attention to information, but not related to personal injury or property damage.

WARNING **Owner's Responsibility**

Incorrect installation, adjustment, and use of this burner could result in severe personal injury, death, or substantial property damage from fire, carbon monoxide poisoning, soot or explosion.

Contact a professional, qualified service agency for the installation, adjustment and service of your oil heating system. This work requires technical training, trade experience, licensing or certification in some states and the proper use of special combustion test instruments.

Please carefully read and comply with the following instructions:

- Never store or use gasoline or other flammable liquids or vapors near this burner or appliance.
- Never attempt to burn garbage or refuse in this appliance.
- Never attempt to light the burner/appliance by throwing burning material into the appliance.
- Never attempt to burn any fuel not specified and approved for use in this burner.
- Never restrict the air inlet openings to the burner or the combustion air ventilation openings in the room.

NOTICE This manual contains information that applies to both AF and AFG burners. These burners may appear to be basically identical, but there are differences in design and performance. Please review the comparison chart below:

Feature	AF	AFG
Static Pressure Capability	Conventional - Low range	Enhanced - Medium range
Blower Wheel Design	Standard strip	Special tablock
Inlet Airflow Design	Standard inlet bell	Special airguide
UL Air Tube Combinations	"F" Series ONLY	"F" or "M" Series
Igniter Gaskets Baseplate/Barrier	Optional, as specified	Required, always specified
Low Firing Rate Baffle	Not required	Required, per specification

Figure 1. Burner label location

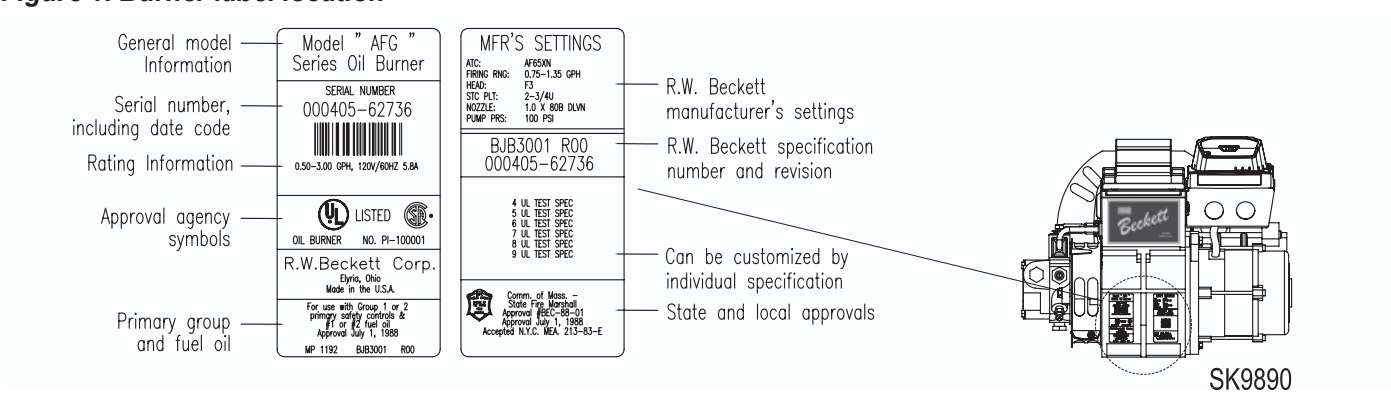

WARNING

Do NOT Alter the Original Burner Design

Tampering with or altering the burner design could seriously impair performance, resulting in loss of static pressure, damage to the system components, reduced air volume, heavy smoke, flame impingement, appliance sooting, hot gas puff-back, and asphyxiation or fire hazards.

Maintain the design to its original configuration.
Only use parts specified for AF or AFG Burners.
Do NOT remove the air guide from the AFG chassis.
Do NOT use 'M' Series air tube combinations on AF Burners.

Never try to convert an AF to an AFG or vice versa
Any design alteration will:

- Void UL Listing
- Void manufacturer's warranties
- Seriously impact burner performance
- Greatly increase your liability risk

WARNING

Impaired Burner Performance and Fire Hazard.

Do NOT operate the burner beyond specifications outlined in the following Table.

- For applications beyond these limits, consult Beckett Technical Service at 1-800-645-2876.
- NOTE: Some packaged appliances with burners may be agency listed as a unit to operate beyond these limits. Consult the appliance manufacturer's specifications and agency approvals for verification.

CAUTION

Frozen Plumbing and Water Damage Hazard

If the residence is unattended in severely cold weather, burner primary control safety lockout, heating system component failures, power outages or other electrical system failures could result in frozen plumbing and water damage in a matter of hours. For protection, take preventive actions such as having a security system installed that operates during power outages, senses low temperature and initiates an effective action. Consult with your heating contractor or a home security agency.

Table 1 – Burner Specifications

Capacity (Note 1)	*'F' Head (AF & AFG)* Firing rate range: 0.40 – 3.00 GPH Input: 56,000 – 420,000 Btu
	'L1' Head (AFG Only) Firing rate range: 0.40 - 1.10 GPH Input: 56,000 – 154,000 Btu/h
	'L2' Head (AFG Only) Firing rate range: 0.50 - 1.00 GPH Input: 70,000 – 140,000 Btu/h
	'V1' Head (AFG Only) Firing rate range: 0.75 - 2.75 GPH Input: 105,000 – 385,000 Btu/h
Certifications/ Approvals	UL listed to comply with ANSI/UL296 and CSA-B140.0
Fuels	USA: No. 1 or No. 2 heating oil only (ASTM D396) Canada: No. 1 stove oil or No. 2 furnace oil only **CAUTION** **DO NOT USE GASOLINE, CRANKCASE OIL, OR ANY OIL CONTAINING GASOLINE.**
Electrical	Power supply: 120 volts AC, 60 Hz single phase Operating load: 5.8 Amps max Motor: 1/7 hp, 3450 rpm, NEMA 48M frame PSC rotation CCW when facing shaft end Ignition: Continuous duty solid-state igniter
Fuel pump	Outlet pressure: Note 2
Air tube	ATC code: See Table 2
Dimensions (with cover)	Height (maximum): 12.5 inches Width (maximum): 15 inches Depth: 9.25 inches Air tube diameter: 4.00 inches
Ambient Operating Temperature	+32º F. (0 C.) Minimum +115º F. (+46 C.) Maximum (See above Warning)
Moisture	5% to 95% RH, non-condensing and non-crystallizing

Note 1: Approval agency listed rating for these burners is 0.40 to 3.00 gph. However, the firing rate range is limited by the specific air tube combination being used. Refer to *Table 2*.
Note 2: See appliance manufacturer's burner specifications for recommended pump discharge pressure.

Table 2 – Air Tube Combination (ATC) codes

Firing Rate (gph) (min-max)	Head	Static plate size (inches)	Venturi	ATC Codes for usable air tube lengths ('A' in inches; See *Figure 3*.)									
				4-1/2	5	5-3/8	6-5/8	7	7-1/4	9	10-1/2	13	16
0.50-0.75	F0	3-3/8U	None	AF44XR	-	AF53XR	AF65XR	-	AF72XR	AF90XR	AF104XR	AF130XR	A160XR
0.75-1.25	F3	2-3/4U	None	AF44XN	-	AF53XN	AF65XN	-	AF72XN	AF90XN	AF104XN	AF130XN	AF160XN
0.85-1.35	F4	2-3/4U	None	AF44WH	-	AF53WH	AF65WH	-	AF72WH	AF90WH	AF104WH	AF130WH	AF160WH
0.85-1.65	F6	2-3/4U	None	AF44YB	-	AF53YB	AF65YB	-	AF72YB	AF90YB	AF104YB	AF130YB	AF160YB
1.10-2.00	F12	2-3/4U	None	AF44XO	-	AF53XO	AF65XO	-	AF72XO	AF90XO	AF104XO	AF130XO	AF160XO
1.65-2.50	F22	2-3/4U	None	AF44XP	-	AF53XP	AF56XP	-	AF72XP	AF90XP	AF104XP	AF130XP	AF160XP
2.50-3.00	F31	None	None	AF44XS	-	AF53XS	AF65XS	-	AF72XS	AF90XS	AF104XS	AF130XS	AF160XS
0.50-1.10	L1	3-3/8U	8hole	-	AFG50MB	-	-	AFG70MB	-	AFG90MB	-	-	-
0.50-1.00	L2	2-3/4U	8hole		AFG50MP	-	-	AFG70MP	-	AFG90MP	-	-	-
0.75-2.75	V1	2-3/4U	8hole	-	AFG50MD	-	-	AFG70MD	-	AFG90MD	-	-	-
0.40-0.75	F0	3-1/2U	None	AF44WG	-	AF53WG	AF65WG	-	AF72WG	AF90WG	AF104WG	AF130WG	A160WG

NOTICE **Special Requirements**

- THE INSTALLATION OF A BURNER SHALL BE IN ACCORDANCE WITH THE REGULATIONS OF AUTHORITIES HAVING JURISDICTION.
- For recommended installation practices in the U.S. refer to the latest edition of NFPA 31. (CSA-B139 and CSA-B140 in Canada.
- Concealed damage — If you discover damage to the burner or controls during unpacking, notify the carrier at once and file the appropriate claim.
- When contacting Beckett for service information — Please record the burner serial number (and have available when calling or writing). You will find the serial number on the silver label located on the left rear of the burner. Refer to ***Figure 1***.

WARNING **Professional Service Required**

Incorrect installation, adjustment, and use of this burner could result in severe personal injury, death, or substantial property damage from fire, carbon monoxide poisoning, soot or explosion.

Please read and understand the manual supplied with this equipment. This equipment must be installed, adjusted and put into operation only by a qualified individual or service agency that is:

- Licensed or certified to install and provide technical service to oil heating systems.
- Experienced with all applicable codes, standards and ordinances.
- Responsible for the correct installation and commission of this equipment.
- Skilled in the adjustment of oil burners using combustion test instruments.

The installation must strictly comply with all applicable codes, authorities having jurisdiction and the latest revision of the National Fire Protection Association Standard for the installation of Oil-burning Equipment, NFPA 31 (or CSA-B139 and CSA-B140 in Canada). Regulation by these authorities take precedence over the general instructions provided in this installation manual.

Inspect/Prepare Installation Site

Inspect Chimney or Direct Vent System

WARNING **Fire, Smoke & Asphyxiation Hazard**

- Carefully inspect the chimney or exhaust vent system.
- Make sure it is properly sized and in good working condition.
- Follow the instructions supplied by the appliance manufacturer.
- The installation must strictly comply with all applicable codes, authorities having jurisdiction and the latest revision of the National Fire Protection Association Standard NFPA 31 for the installation of chimneys and vent sizing, (or CSA-B139 and CSA-B140 in Canada).
- Regulation by these authorities take precedence over the general instructions provided in this installation manual.

1. Starting with minimum gph firing rate, the minimum size recommended is 6” flue pipe with 8” X 8” inside chimney, unless specified otherwise by the appliance manufacturer.
2. A chimney flue shall extend at least 3 feet above the highest point at which the chimney comes in contact with the roof, and not less than 2 feet above the highest roof surface or structure within 10 feet horizontally of the chimney. Refer to ***Figure 2***.
3. Any accumulation of soot or debris in chimney offsets should be removed
4. Any obstructions such as a protruding joint or a piece of broken tile wedged in the chimney should be removed.
5. No other appliance connection should be made to the same flue pipe.
6. The flue pipe should have an upward pitch toward the chimney of at least 1/4” per foot of length. It should fit tightly and should not project into the chimney.
7. Any leakage between tiles, around clean-out doors, or around the vent pipe should be sealed.

Insulated stainless steel chimney liners

The new designs of high efficiency oil furnaces and boilers in conjunction with flame retention oil burners are more efficient. One result of increased efficiency is lower flue gas temperatures. As flue gases rise in the chimney, they will cool and condense when they reach the dew point. The condensation will mix with the sulphur in the flue gases creating sulphuric acid. The acid will attack the chimney mortar, brick and clay liners causing corrosion, deterioration and blockage of the chimney. Eventually the blockage could prevent exhausting the flue gases. Instead, the flue gases could vent out the barometric damper into the living space.

Therefore, it is strongly recommended that an approved insulated stainless steel liner be installed.

- For those installations not requiring a chimney, such as through-the-wall vented appliances, follow the instructions given by the appliance and power venter (if used) manufacturers.

Figure 2 – Chimney Design - Above the Roof

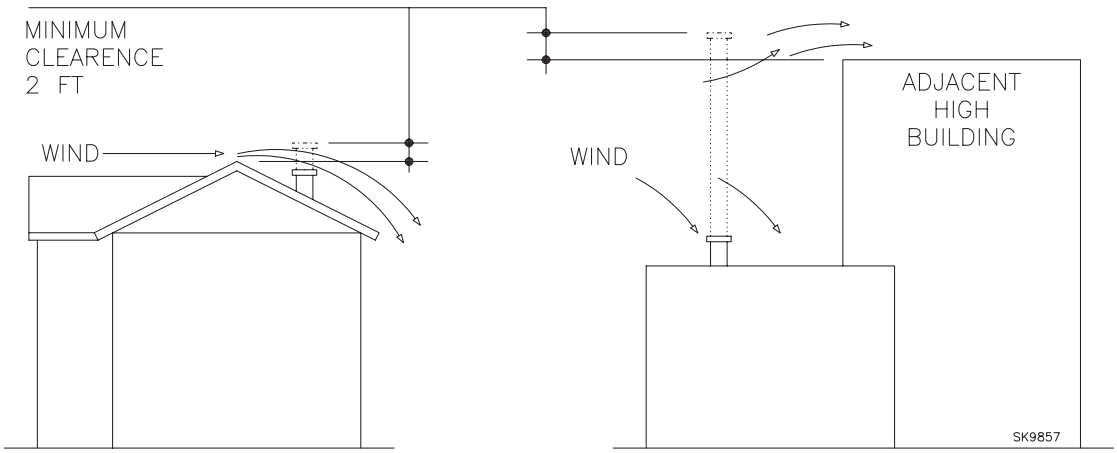

NOTE: Correct chimney design is shown by dotted lines. Incorrect chimney design, as shown by the solid lines, may result in down-drafts.

Combustion air supply

WARNING

Adequate Combustion and Ventilation Air Supply Required

Failure to provide adequate air supply could seriously affect the burner performance and result in damage to the equipment, asphyxiation, explosion or fire hazards.

- The burner cannot properly burn the fuel if it is not supplied with a reliable combustion air source.
- Follow the guidelines in the latest editions of the NFPA 31 and CSA-B139 regarding providing adequate air for combustion and ventilation.

Appliance located in confined space

The confined space should have two (2) permanent openings: one near the top of the enclosure and one near the bottom of the enclosure. Each opening shall have a free area of not less than (1) one square inch per 1,000 BTU's per hour of the total input rating of all appliances within the enclosure. The openings shall have free access to the building interior, which should have adequate infiltration from the outside.

Exhaust fans and other air-using devices

Size air openings large enough to allow for all air-using devices in addition to the minimum area required for combustion air. If there is any possibility of the equipment room developing negative pressure (because of exhaust fans or clothes dryers, for example), either pipe combustion air directly to the burner or provide a sealed enclosure for the burner and supply it with its own combustion air supply.

Direct air supply and sidewall venting

- Some AFG burners are equipped with combustion air boots to allow use of outside air for combustion.
- When sidewall venting appliances, carefully follow appliance and power venter instructions for installation and wiring.

WARNING

Follow the Outside Air Kit Instructions Exactly

Failure to comply could result in impaired combustion, appliance soot-up, puffback of smoke, and fire or asphyxiation hazards.

- Do not attempt to install outside air piping to the burner without using the outside air kit and instructions.

Outside air kit applications

Refer to separate instruction sheet supplied with AF/AFG outside air kit for installation. This optional kit allows combustion air to be piped directly to the burner (Beckett part number 51747).

Clearances to burner and appliance

- Provide space around burner and appliance for easy service and maintenance.
- Check minimum clearances against those shown by the appliance manufacturer and by applicable building codes.

WARNING

Protect Steel Combustion Chamber From Burnout

Failure to comply could result in damage to the heating equipment and result in fire or asphyxiation hazards.

- When retrofitting appliances that have unlined stainless steel combustion chambers, protect the chamber by lining the inside surfaces with a ceramic fiber blanket, such as a wet-pac or other suitable refractory material.
- Some steel chambers may not require liners because the appliance was designed and tested for use with flame retention burners. Refer to the manufacturer's instructions.

Combustion chamber — Burner retrofitting

Verify that the appliance combustion chamber provides at least the minimum dimensions given in ***Table 3***.

Table 3. Chamber Dimensions

Chamber Dimensions (inches)					
Firing Rate (GPH)	Round I.D.	Rectangular		Height	Floor to nozzle
		Width	Length		
0.50	8	7	8	12	5-6
0.75	9	8	9	12	5-6
1.00	10	9	10	12.5	5-6
1.25	11	10	11	12.5	5-6
1.50	12	11	12	13	6-7
2.00	14	12	15	13.5	6-7
2.50	16	13	17	14	7-8
3.00	18	14	18	15	7-8

Prepare the Burner

Low Firing Rate Baffle

The AFG Low Firing Rate Baffle (LFRB) reduces the air flow and pressure. The LFRB is sometimes used for firing rates under 1.00 gph as listed in ***Table 4***. Refer to the appliance manufacturer's instructions. Do not omit the LFRB when specified. Omitting the baffle when specified or installing the baffle when not specified could result in impaired burner performance.

Burner fuel unit

Verify that the burner fuel unit is compatible with the oil supply system. For more details, refer to the pump manufacturer's instructions provided with the burner.

Attach air tube (if not already installed)

If using a flange and gasket, slide them onto the air tube. Then attach the air tube to the burner chassis using the four sheet metal screws provided. Refer to ***Figure 4*** for details.

Nozzle and Pump Pressure

WARNING

Correct Nozzle and Flow Rate Required

Incorrect nozzles and flow rates could result in impaired combustion, under-firing, over-firing, sooting, puff-back of hot gases, smoke and potential fire or asphyxiation hazards.

Use only nozzles having the brand, flow rate (gph), spray angle and pattern specified by the appliance manufacturer.

Follow the appliance manufacturer's specifications for the required pump outlet pressure for the nozzle, since this affects the flow rate.

- Nozzle manufacturers calibrate nozzle flow rates at 100 psig.
- When pump pressures are higher than 100 psig, the actual nozzle flow rate will be greater than the gph stamped on the nozzle body. (Example: A 1.00 gph nozzle at 140 psig = 1.18 gph)

Securely tighten the nozzle (90 torque inch pounds). For typical nozzle flow rates at various pressures refer to ***Table 5***.

Table 4. AFG Reduced Firing Rates (with LFRB)

Burner head type	Low Firing Rate Baffle installed
F0	up to 0.65 gph
F3 or L1	up to 0.85 gph
F4 or F6	up to 0.90 gph
V1	up to 1.00 gph

Table 5. Nozzle Flow Rate by Size

Nozzle flow rate U. S. gallons per hour of No. 2 fuel oil when pump pressure (psig) is:					
Nozzle size (rated at 100 psig)	125 psi	140 psi	150 psi	175 psi	200 psi
0.40	0.45	0.47	0.49	0.53	0.56
0.50	0.56	0.59	0.61	0.66	0.71
0.60	0.67	0.71	0.74	0.79	0.85
0.65	0.73	0.77	0.80	0.86	0.92
0.75	0.84	0.89	0.92	0.99	1.06
0.85	0.95	1.01	1.04	1.13	1.20
0.90	1.01	1.07	1.10	1.19	1.27
1.00	1.12	1.18	1.23	1.32	1.41
1.10	1.23	1.30	1.35	1.46	1.56
1.20	1.34	1.42	1.47	1.59	1.70
1.25	1.39	1.48	1.53	1.65	1.77
1.35	1.51	1.60	1.65	1.79	1.91
1.50	1.68	1.77	1.84	1.98	2.12
1.65	1.84	1.95	2.02	2.18	2.33
1.75	1.96	2.07	2.14	2.32	2.48
2.00	2.24	2.37	2.45	2.65	2.83
2.25	2.52	2.66	2.76	2.98	-
2.50	2.80	2.96	-	-	-

Install burner nozzle (if not already installed)

1. Remove the plastic plug protecting the nozzle adapter threads
2. Place a 3/4" open-end wrench on the nozzle adapter. Insert the nozzle into the adapter and finger tighten. Finish tightening with a 5/8" open-end wrench. Use care to avoid bending the burner head support legs or electrodes. If you remove the head to replace the nozzle (type "L1"/"L2" or "V1" heads), carefully reconnect the head to the nozzle adapter, making sure that the head support makes contact with the nozzle adapter shoulder. Refer to ***Figure 5*** or ***6***.

3. If the nozzle is already installed, remove the nozzle line assembly to verify that the nozzle size and spray pattern are correct for the application (per appliance manufacturer's information). Verify that the electrode tip settings comply with ***Figure 3***.
4. If the nozzle is not installed, obtain a nozzle from the manufacturer, having the capacity and spray angle specified in the appliance manufacturer's information. For conversions or upgrades, when information is not available for the application:
   - Refer to ***Table 6*** to select the mid-range nozzle spray angle for the head type being used.
   - Fire the burner and make sure the combustion is acceptable and the flame is not impinging on chamber surfaces.
   - If a shorter flame is needed, select a wider spray angle. If a longer flame is needed, select a narrower spray angle.
   - Either hollow or solid spray patterns may be used. If combustion results are not satisfactory with the selected spray pattern, try the other pattern.

Table 6. Nozzle Spray Angles

Recommended nozzle spray angles	
"F" head	70° or 80° nozzle
"L1" & "L2" head	45°, 60°, or 70° nozzle
"V1" head	45°, 60°, or 70° nozzle

Check/adjust electrodes

Check the electrode tip settings. Adjust if necessary to comply with the dimensions shown in ***Figure 3***. To adjust, loosen the electrode clamp screw and slide/rotate electrodes as necessary. Securely tighten the clamp screw when finished.

Servicing nozzle line assembly

1. Turn off power to burner before proceeding.
2. Disconnect oil connector tube from nozzle line.
3. Loosen the two screws securing igniter retaining clips and rotate both clips to release igniter baseplate. Then tilt igniter back on its hinge.
4. Remove splined nut.
5. "F" head air tube. - Remove nozzle line assembly from burner, being careful not to damage the electrodes or insulators while handling. To ease removal of long assemblies (over 9 inches), rotate assembly 180° from installed position after pulling partially out of tube.
6. "L1", "L2", and "V1" head air tubes. - Slide nozzle line assembly forward (further into air tube) so the head clears the venturi opening. Then rotate the nozzle line assembly 90° so the nozzle line end points up. Pull the nozzle line assembly toward you and remove assembly from burner.
7. To replace the nozzle assembly, reverse the above steps.

Figure 3. – Electrode Tip Adjustment

Standard Dimensions for F, L1, and V1 Heads.

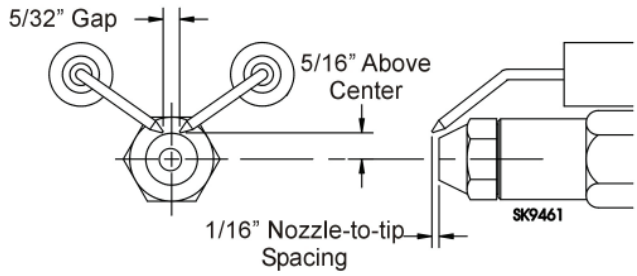

The Dimensions shown below are for use with L2 heads and M series air tube combinations ending with an 'N' suffix (example: AFG70MDAQ**N**)

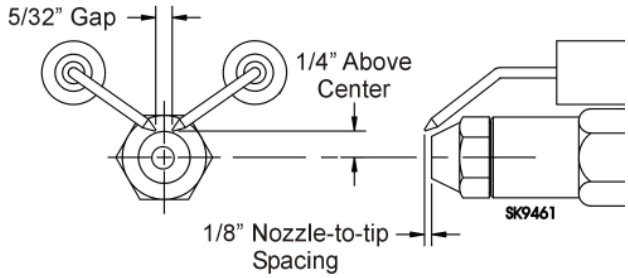

Mount Burner on Appliance

Mounting options

1. Bolt the burner to the appliance using the factory-mounted flange or an adjustable flange.

Mounting dimensions

1. When using the Beckett universal adjustable flange, mount the air tube at a 2° downward pitch unless otherwise specified by the appliance manufacturer.
2. Verify that the air tube installed on the burner provides the correct insertion depth. See ***Figure 7***.
3. The end of the air tube should normally be ¼" back from the inside wall of the combustion chamber. Never allow the leading edge of the head assembly to extend into the chamber, unless otherwise specified by the heating appliance manufacturer. Carefully measure the insertion depth when using an adjustable flange. Verify the insertion depth when using a welded flange.

Figure 4. Check/Adjust 'Z' Dimension for 'F' Heads

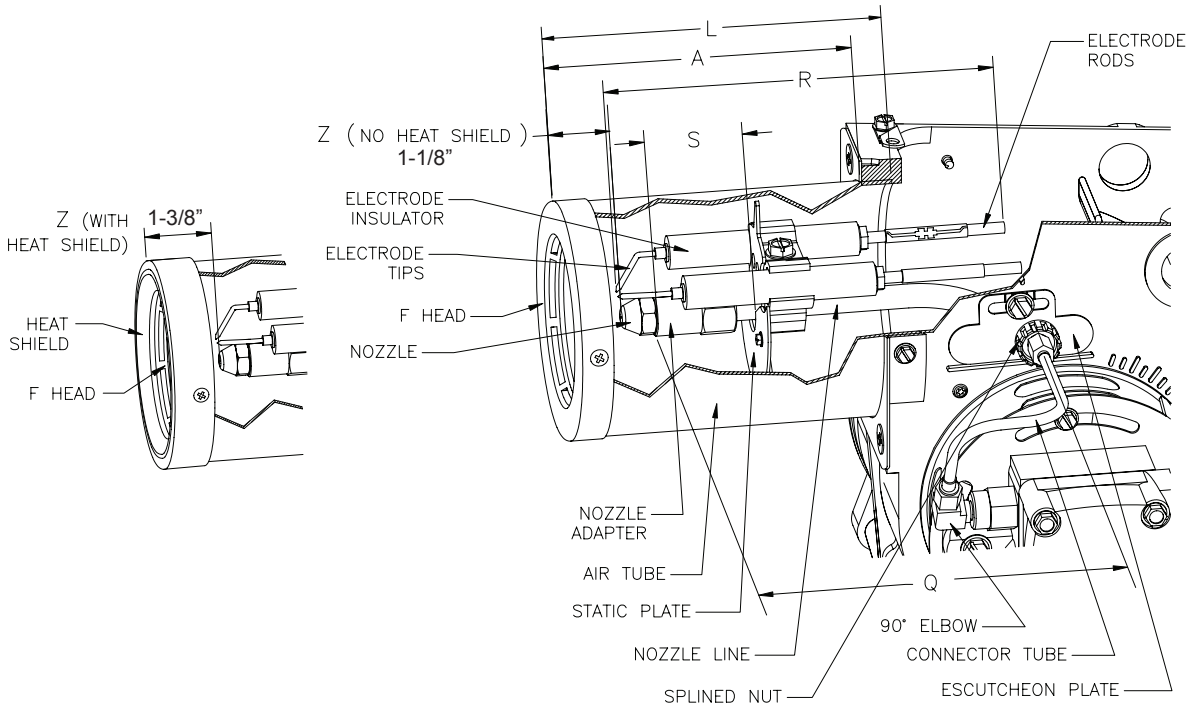

Burner Dimensions

	For usable length A (inches)			
Dimension (inches)	F Head	L1 Head	L2 Head	V1 Head
H (nozzle to head), ±1/32	N/A	1/4	7/32	1/4
L (Total tube length)	A+1/2	A+1/2	A+1/2	A+1/2
R (electrode length), ± 1/4	A+2-1/4	A+1-1/8	A+1-1/8	A+1-1/8
S (adapter to static plate), ± 1/16	(Note 1)	1-3/8	1-3/8	1-3/8
Q (nozzle line length),	A+ 15/16	A+ 3/16	A+ 3/16	A+ 3/16
Z				
(F head-no heat shield)	1-1/8	N/A	N/A	N/A
(F head-with heat shield)	1-3/8	N/A	N/A	N/A
(L1 head w/straight shroud)	N/A	1-3/8	N/A	N/A
(L1/L2/V1 head w/conic shroud)	N/A	1-3/4	1-3/4	1-3/4

Note 1: 1-3/8 for dimension A less than 4"; 1-5/8 for dimension A from 4" through 4-1/2 ", 2-13/32 for dimension A greater than 4-1/2".

WARNING **Adjust the 'Z' dimension to the required specification.**

Incorrect Adjustments could cause combustion problems, carbon deposition from flame impingement, heavy smoke generation and fire hazard.

Make all adjustments exactly as outlined in the following information.

Check/Adjust 'Z' Dimension - 'F' heads

1. The important 'Z' dimension is the distance from the face of the nozzle to the flat face of the head (or heat shield, if applicable). This distance for F heads is 1-⅛" (1-⅜" if the air tube has a heat shield). The "Z" dimension is factory set for burners shipped with the air tube installed. Even if factory set, verify that the "Z" dimension has not been changed.
2. Use the following procedure to adjust the "Z" dimension, if it is not correct:
   - Turn off power to the burner.
   - Disconnect the oil connector tube from the nozzle line
   - See above figure. Loosen the splined nut from the nozzle line. Loosen the hex head screw securing the escutcheon plate to the burner housing.
   - Place the end of a ruler at the face of the nozzle and, using a straight edge across the head, measure the distance to the face of the head. A Beckett T501 gauge may also be used.
   - Slide the nozzle line forward or back until this dimension for F heads is 1-⅛" (1-⅜" to the face of the heat shield, if applicable).
   - Tighten the hex head screw to secure the escutcheon plate to the burner chassis. Then tighten the splined nut and attach the oil connector tube.
3. Recheck the "Z" dimension periodically when servicing to ensure the escutcheon plate has not been moved. You will need to reset the "Z" dimension if you replace the air tube or nozzle line assembly. The Beckett Z gauge (part number Z-2000) is available to permit checking the F head "Z" dimension without removing the burner from the appliance.

Figure 5. Check/Adjust 'Z' Dimension - L1 & L2 Heads

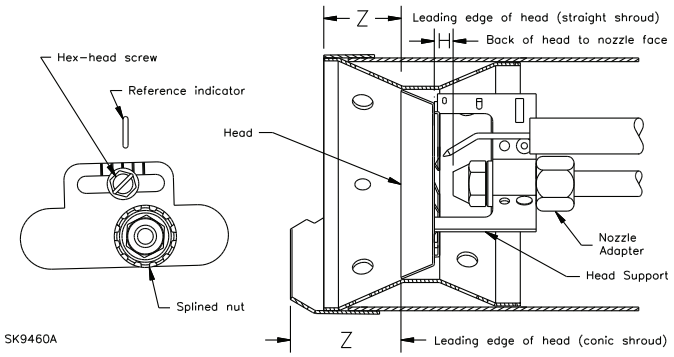

L1/L2 heads (see *Table 7* and *Figure 3* for dimensions)

1. See figure above. The important "Z" dimension is the distance from the leading edge of the head to the end of the air tube. This distance for L1 & L2 heads is 1-3/8" if the tube has a straight shroud or 1-3/4" if the air tube has a conic shroud. The "Z" dimension is factory set for burners shipped with the air tube installed. Even if factory set, verify that the "Z" dimension has not been changed.
2. Use the following procedure to adjust the "Z" dimension, if it is not correct:
   - Turn off power to the burner.
   - Disconnect the oil connector tube from the nozzle line.
   - Refer to figure. Loosen the splined nut from the nozzle line. Loosen the hex head screw securing the escutcheon plate to the burner housing.
   - Place the end of a ruler at the leading edge of the head and, using a straight edge across the end of the air tube, measure the distance to the end of the tube. A Beckett T501 gauge may also be used.
   - Slide the nozzle line forward or back until this dimension is 1-3/8" for L1 & L2 heads if the tube has a straight shroud, or 1-3/4" if the air tube has a conic shroud.
   - Tighten the hex head screw to secure the escutcheon plate to the burner chassis. Then tighten the splined nut and attach the oil connector tube.
3. Recheck the "Z" dimension periodically when servicing to ensure the escutcheon plate has not been moved. You will need to reset the "Z" dimension if you replace the air tube or nozzle line assembly.

Figure 6. Check/Adjust 'Z' Dimension - V1 Heads

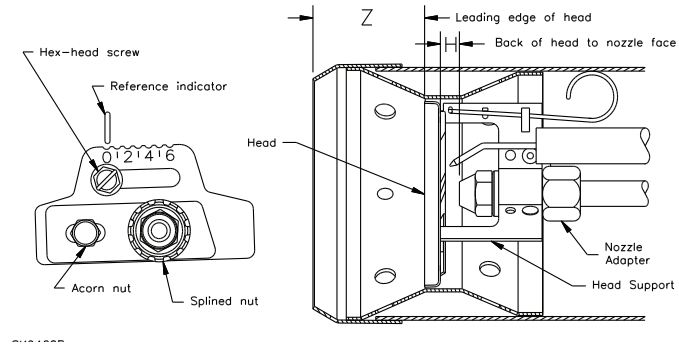

V1 heads (see Table below and Figure above for dimensions)

1. See figure above. The important "Z" dimension is the distance from the leading edge of the head to the end of the air tube. This distance for V1 heads is 1-¾". The "Z" dimension is factory set for burners shipped with the air tube installed. Even if factory set, verify that the "Z" dimension has not been changed.
2. Use the following procedure to adjust the "Z" dimension, if it is not correct:
   - Turn off power to the burner.
   - Disconnect the oil connector tube from the nozzle line.
   - See figure above. Loosen the splined nut from the nozzle line. Loosen the hex head screw securing the head adjusting plate to the burner housing.
   - Loosen the acorn nut. Move the head adjusting plate until the "0" lines up with the reference indicator on the housing, and retighten the hex head screw. Place the end of a ruler at the leading edge of the head and, using a straight edge across the end of the air tube, measure the distance to the end of the tube. A Beckett T501 gauge may also be used.
   - Slide the nozzle line forward or back until this dimension is 1-¾" for V1 heads. Tighten the acorn nut.
   - Tighten the hex head screw to secure the head adjusting plate to the burner chassis. Then tighten the splined nut and attach the oil connector tube.
3. Recheck the "Z" dimension periodically when servicing to ensure the escutcheon plate has not been moved. You will need to reset the "Z" dimension if you replace the air tube or nozzle line assembly.

Set head position adjusting plate (V1 head only)

1. After setting "Z" dimension, loosen head adjusting plate hex head screw and nozzle line splined nut. Move the nozzle line assembly until the burner reference indicator lines up with the head adjusting plate setting number given in Table shown below.
2. Tighten the hex head screw and splined nut. (DO NOT loosen the acorn nut when setting head position.) Refer to the manufacturer's instructions for OEM settings.
3. The position of the head affects air flow volume and pattern. For most applications, the burner will perform satisfactorily with the air adjustment plate setting of Table shown below.
4. If combustion results indicate the need for change, adjust the head position adjusting plate forward or back one position at a time to optimize combustion.

Table for initial adjusting plate settings for V1 Head

V1 Adjusting Plate Setting	AFG with V1 Head Burner Firing Rates
0	0.75-1.00
1	1.00-1.50
2	1.50-1.75
3	1.75-2.00
4	2.00-2.25
5	2.25-2.50
6	2.50-2.75

Figure 7. – Mounting Burner in Appliance

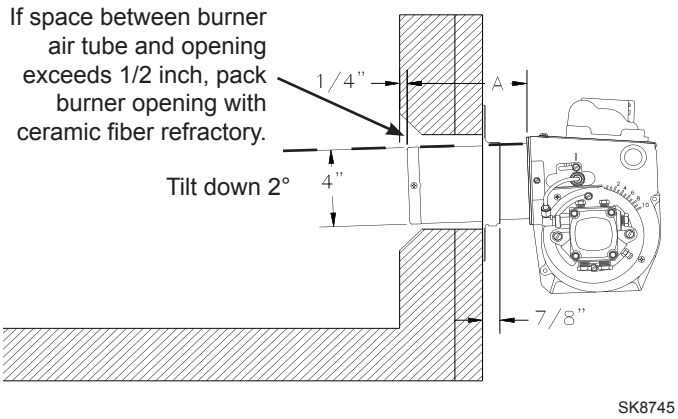

Installing the Oil Tank and Supply System

WARNING **Oil Leak and Fire Hazard**

Install the oil tank following applicable standards in the U.S. by referring to the latest edition of NFPA 31 or CSA-B139 & CSA-B140 in Canada, and all authorities having jurisdiction.

CAUTION **Do Not Use Teflon Tape**

Damage to the pump could cause impaired burner operation, oil leakage and appliance soot-up.

- Never use Teflon tape on fuel oil fittings.
- Tape fragments can lodge in fuel line components and fuel unit, damaging the equipment and preventing proper operation.
- Use oil-resistant pipe sealant compounds.

Note: to determine the proper fuel line size, refer to the fuel pump manufacturer's instructions provided with the burner. Refer to ***Figure 8*** or ***Figure 9*** for typical installation layouts.

Fuel Line Valves and Filter

Install two high quality, oil duty rated, fusible handle design shutoff valves in accessible locations on the oil supply line. Locate one close to the tank and the other close to the burner, upstream of the filter for service access.

Install a generous capacity filter inside the building between the fuel tank shutoff valve and the burner, locating both the filter and the valve close to the burner for ease of servicing. Filter should be rated for 50 microns or less.

Figure 8. – Inside Tank Gravity Feed System

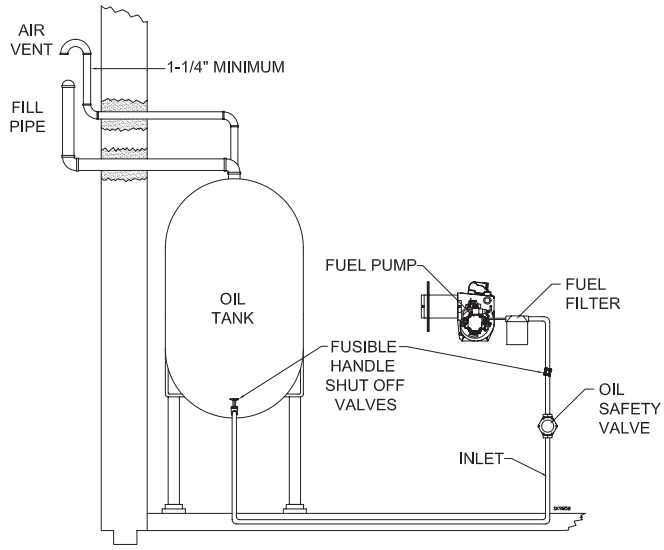

Figure 9. – Outside Buried Tank-Lift System

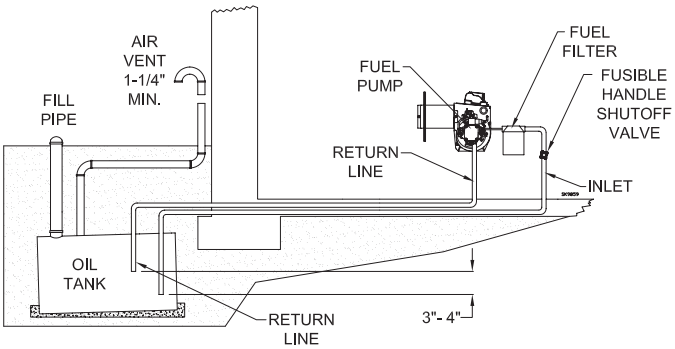

NOTICE To further protect the fuel supply system and reduce nozzle orifice plugging with firing rates below 0.75 gph, a dual filtration system can be installed. This typically consists of a 50 micron primary filter, located near the fuel tank and a secondary filter rated for at least 10 microns located near the burner.

Fuel supply level with or above burner

WARNING **Do Not Install By-pass Plug with 1-Pipe System**

Failure to comply could cause Immediate pump seal failure, pressurized oil leakage and the potential for a fire and injury hazard.

- The burner is shipped without the by-pass plug installed.
- Install the by-pass plug in two-pipe oil supply systems ONLY.

CAUTION **Oil Supply Pressure Control Required**

Damage to the filter or pump seals could cause oil leakage and a fire hazard.

- The oil supply inlet pressure to the burner ***cannot exceed 3 psig***.
- Insure that a pressure limiting device is installed in accordance with the latest edition of NFPA 31.
- **Do NOT install valves in the return line.** (NFPA 31, Chapter 8.)
- **Gravity Feed Systems:** Always install an anti-siphon valve in the oil supply line or a solenoid valve (RWB Part # 2182602U) in the pump/nozzle discharge tubing to provide backup oil flow cut-off protection.

The burner may be equipped with a single-stage fuel unit for these installations. Connect the fuel supply to the burner with a single supply line if you want a one-pipe system (making sure the bypass plug is NOT installed in the fuel unit.) Manual bleeding of the fuel unit is required on initial start-up. If connecting a two-pipe fuel supply, install the fuel unit bypass plug.

Fuel supply below the level of the burner

When the fuel supply is more than eight feet below the level of the burner, a two-pipe fuel supply system is required. Depending on the fuel line diameter and horizontal and vertical length, the installation may also require a two-stage pump. Consult the fuel unit manufacturer's literature, included with the burner, for lift and vacuum capability.

Fuel line installation

- Continuous lengths of heavy wall copper tubing are recommended. **Always use flare fittings. Never use compression fittings.**
- Always install fittings in accessible locations. Proper routing of fuel lines is required to prevent air cavitation and vibration.

Wire burner

Burner packaged with appliance

WARNING **Electrical Shock Hazard**

Electrical shock can cause severe personal injury or death.

- Disconnect electrical power before installing or servicing the burner.
- Provide ground wiring to the burner, metal control enclosures and accessories. (This may also be required to aid proper control system operation.)
- Perform all wiring in compliance with the National Electrical Code ANSI/NFPA 70 (Canada CSA C22.1)

- Refer to appliance manufacturer's wiring diagram for electrical connections.

Burner installed at jobsite

- Refer to ***Figures 11a*** and ***11b***, for typical burner wiring, showing cad cell primary controls. Burner wiring may vary, depending on primary control actually used.
- Refer to the appliance manufacturer's wiring diagram prior to connecting the burner wiring. All wiring must be in accordance with the latest revision of National Electric Code NFPA 70 and all local codes and regulations. In Canada, all wiring is to be in accordance with the Canadian Electrical Code, Part 1.

The 7505 primary control with valve-on delay (pre-time) and burner motor-off delay (post-time) requires a constant 120 volts AC power source supplied to the BLACK wire on the control. The RED wire goes to the appliance limit circuit. Please note that other control manufacturers may use different wire colors for power and limit connections.

Special wiring required with covered burners

The mounting plate is not a conduit connection point. Pass conduit and attached connector through the opening in the mounting plate and attach it directly to the burner-mounted 4x4 electrical box.

If attaching a burner cover to a previously installed burner, attach the mounting plate and then slide the conduit into the "J" shaped conduit slot.

Burner Controls

GeniSys Model 7505 Control

WARNING **Fire or Explosion Hazard**

Can cause severe injury, death, or property damage.

- The control can malfunction if it gets wet, leading to accumulation of oil or explosive oil vapors.
- Never install where water can flood, drip or condense on the control.
- Never use a control that has been wet - replace it.

Features

- Thermostat / Operating and Limit Control Compatible
- Welded Relay Protection
- Limited Recycle
- Limited Reset
- 3 Status Lights
- Valve-On Delay / Motor-Off Delay (Field programmable with 52067 GeniSys Display)
- 15 Second Lockout Time
- Interrupted or Intermittent Duty Ignition
- Technician Pump Priming Mode
- Disable Function
- Communication Ports

Wiring

WARNING **Explosion, Fire, Scald, and Burn Hazard**

All heating appliances must have HIGH LIMIT protection to interrupt electrical power and shutdown the burner if operating or safety controls fail and cause a runaway condition.

- Follow the appliance manufacturer's wiring diagrams and note all required safety controls.
- Typical safety controls include high temperature or pressure limits, low water cutoffs, pressure relief valves and blocked flue sensing switches.
- Verify all limit and safety controls are installed and functioning correctly, as specified by the manufacturer, applicable safety standards, codes and all authorities having jurisdiction.
- Ensure that the appliance is free of oil and oil vapor before starting or resetting the burner.

CAUTION **Incorrect Wiring Will Result in Improper Control Operation**

- GeniSys wiring label colors may not match the wire colors of the burner or other manufacturers' controls.
- The GeniSys Control should be wired according to the appliance manufacturer's instructions.

Figure 10 - 7505 Control

Optional Components:

Contractor's Tool:
Hand-held device for programming and diagnostics

Display Module:
Permanent device for programming and diagnostics

Alarm Module:
For adding isolated low voltage alarm contacts to the base control. See Alarm Module Instructions for specifications.

Typical Burner Sequence of Operation for GeniSys 7505 Control.
Refer to the appliance manufacturer's wiring diagram for actual specifications.

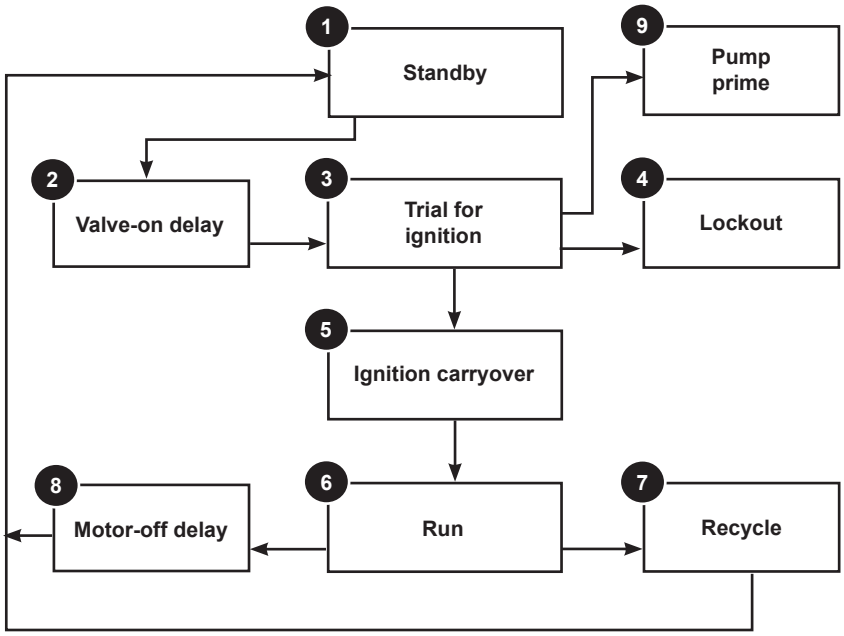

1. **Standby**: The burner is idle, waiting for a call for heat.
2. **Valve-On Delay**: The igniter and motor are on while the control delays turning on the oil solenoid valve for the programmed time.
3. **Trial For Ignition**: The oil solenoid valve is energized. A flame should be established within the factory set trial for ignition time (lockout time).
4. **Lockout**: The control has shut down for one of the following safety reasons:

   a. The trial for ignition (lockout) time expired without flame being established.

   b. The cad cell detected flame at the end of the Valve On Delay state.

   To reset the control from lockout click the button 1-second.

NOTE: A recurrence of the above failure modes or a failed welded relay check could cause the control to enter a **Hard Lockout** state that must be reset only by a qualified service technician.
To reset from Hard Lockout, hold the reset button for 15 seconds until the yellow light turns on.

5. **Ignition Carryover**: Once flame is established, the igniter remains on for 10 additional seconds to ensure flame stability.
6. **Run**: The flame is sustained until the call for heat is satisfied. The burner is then sent to Motor-Off Delay, if applicable, or it is shut down and sent to Standby.
7. **Recycle**: If the flame is lost while the burner is firing, the control shuts down the burner, enters a 60 second recycle delay, and repeats the ignition sequence. The control will continue to Recycle each time the flame is lost, until it reaches a pre-set time allotment. The control will then go into Hard Lockout instead of recycle. This feature prevents excessive accumulation of oil in the appliance firing chamber.
8. **Motor-Off Delay**: If applicable, the oil solenoid valve is turned off and the control delays turning the motor off for the set motor-off delay time before the control returns to standby.
9. **Pump Prime:** The igniter and motor are on with the oil solenoid valve energized for 4 minutes. During Pump Prime mode, the cad cell is disregarded, allowing the technician to prime the pump without having to jumper the cad cell.

Figure 11a. – Interrupted ignition, valve-on delay only (no motor-off delay)

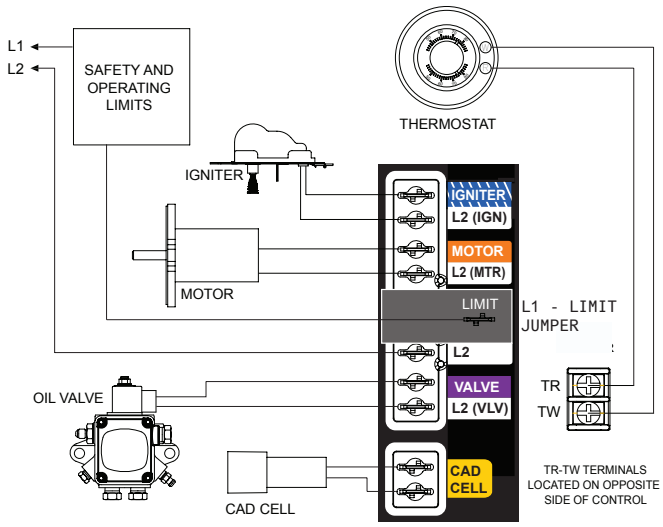

Figure 11b. – Interrupted ignition, valve-on delay and motor-off delay

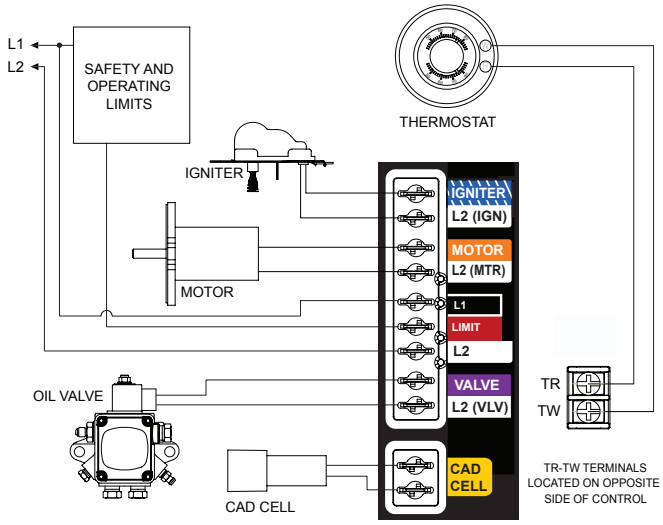

Reset Button Operation

Table 2 explains what action the control will take when the reset button is pressed for different lengths of time during the various burner operating states.

Table 2 - Reset Button Operation

If the burner is in the below state:	Pushing the reset button will:		
	Button Click (press < 1 second)	Button Hold (press > 1 second)	Button Hold (press 15+ seconds)
Lockout	Reset from Soft Lockout		Reset from Restricted (Hard) Lockout
Valve-on Delay, Trial for Ignition, Ignition Carryover	Go to Pump Prime (see “Priming the Pump” above)	Disable the Burner: Any time the burner is running, press and hold the reset button to disable the burner. The burner will remain off as long as the button is held.	Enables Pump Priming: After the reset button has been held for 15 seconds, the button can then be clicked during the next ignition sequence to enter Pump Prime mode.
Run (igniter is shut off)	No action		
Motor-Off Delay, Standby	No action		
Pump Prime	No action	Exit Pump Prime mode and return to Standby	

Table 3 - Status Lights

Light Color	On Continuously	Flashing
Red	Restricted (Hard) Lockout	Soft Lockout
Green	Flame Sensed during normal operation (Could be stray light during standby)	Recycle
Yellow	Control is in Pump Prime mode or Reset button currently held for 15+ seconds.	N/A

Figure 10 - Typical Burner Wiring & Burner Sequence of Operation for R7184P Control.
Refer to the appliance manufacturer's wiring diagram for actual specifications.

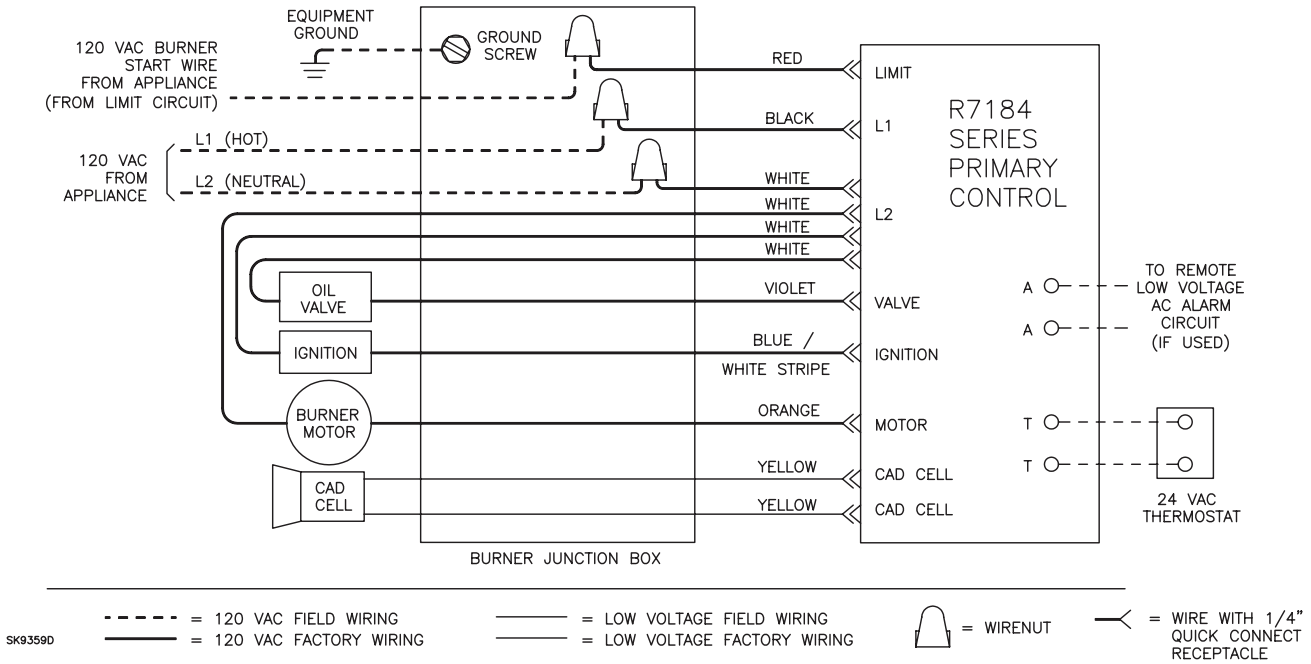

1. **STANDBY.** The burner is idle, waiting for a call for heat. When a call for heat is initiated, there is a 3-10 second delay while the control performs a safe start check.
2. **VALVE-ON DELAY.** The ignition and motor are turned on for a 15 second valve-on delay.
3. **TRIAL FOR IGNITION (TFI).** The fuel valve is opened. A flame should be established within the 15 second lockout time.
4. **LOCKOUT.** If flame is not sensed by the end of the TFI, the control shuts down on safety lockout and must be manually reset. If the control locks out three times in a row, the control enters restricted lockout.
5. **IGNITION CARRYOVER.** Once flame is established, the ignition remains on for 10 seconds to ensure flame stability before turning off. If the control is wired for intermittent duty ignition, the ignition unit stays on the entire time the motor is running.
6. **RUN.** The burner runs until the call for heat is satified. The burner is then sent to burner motor off delay, if applicable, or it is shut down and sent to standby.
7. **RECYCLE.** If the flame is lost while the burner is firing, the control shuts down the burner, enters a 60 second recycle delay, and then repeats the above ignition sequence. If flame is lost three times in a row, the control locks out to prevent cycling with repetitious flame loss due to poor combustion.
8. **BURNER MOTOR-OFF DELAY.** The fuel valve is closed and the burner motor is kept on for the selected motor-off delay time before the control returns the burner to standby.

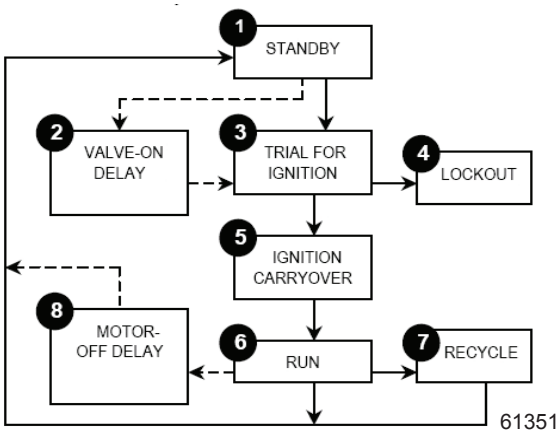

Control System Features

Feature	Interrupted ignition	Limited reset, Limited recycle	Valve-on delay	Burner motor off delay	Alarm Contacts
R7184A	YES	YES	—	—	—
R7184B	YES	YES	YES	—	—
R7184P	YES	YES	YES	YES	Optional

Wire Burner

NOTICE **Some Thermostats Are Polarity Sensitive. Reversed polarity could cause erratic cycling of the burner control.** Connect the wire from the R_H or R terminal on the thermostat to the TR terminal on the control. Connect the wire from the W terminal on the thermostat to the TW terminal on the control.

- Make connections to the control's terminals as shown in ***Figures 11a*** and ***11b***. Refer to the label on the underside of the control for wiring details.
- Note: Motor-off delay on a 7505P will be disabled if the safety and operating limits as shown in ***Figures 11a and 11b*** interrupt power to the control terminal L1.
- Connect thermostat leads to the TR and TW terminals on the control or jumper the TR and TW terminals on the control, as directed by the appliance wiring diagram.
  - Thermostat anticipator Current: 0.1 amp
  - Thermostat voltage: 24 volts AC

Note that if the thermostat short cycles or operates improperly, it may require an isolation relay for proper operation. The Beckett A/C Ready Kit (part no. 51950U) provides this function. Wiring instructions are included with the A/C Ready Kit.

Start Up Burner/Set Combustion

WARNING **Hot Gas Puff-Back and Heavy Smoke Hazard**

Failure to prime the pump properly could result in unstable combustion, hot gas puff-back and heavy smoke.

- Do not allow oil to spray into a hot combustion chamber while bleeding air from the pump.
- Install a gauge in the nozzle discharge port tubing or fully open the pump bleed valve to prevent oil spray from accumulating in the combustion chamber during the air bleed procedure.
- Ensure that all bubbles and froth are purged from the oil supply system before tightening the pump bleed valve.
- Ensure that the appliance is free of oil and oil vapor before starting or resetting the burner.

1. Open the shutoff valves in the oil supply line to the burner.
2. Close air band and partially open air shutter. This is an initial air setting for the pump bleeding procedure only. Additional adjustments must be made with instruments.
3. Set the thermostat substantially above room temperature.
4. Close the line voltage switch to start the burner. If the burner does not start immediately you may have to reset the burner primary control.
5. Initiate a call for heat.
6. After the burner starts, press and hold the reset button for 15 seconds until the yellow light turns on. This indicates that the button has been held long enough.
7. Release the reset button. The yellow light will turn off and the burner will start up again.
8. At burner start up, click the reset button while the igniter is still on. This will transition the control to a dedicated Pump Prime mode, during which the motor, igniter, and valve are powered for four minutes. The yellow light will be on.
9. Bleed the pump until all froth and bubbles are purged. If desired, terminate the call for heat or hold the reset button for at least one second to exit Pump Prime mode and return to Standby.
10. At the end of 4 minutes, the yellow light will turn off and the control will automatically return to standby mode.
11. If prime is not established during the four minute pump prime mode, return to step 8 to re-enter Pump Prime mode. Repeat steps 8 through 10 until the pump is fully primed and the oil is free of bubbles.
12. Terminate the call for heat, and the control will resume normal operation.

Cad Cell Resistance Measurement

- If the Beckett 7505 control is equipped with the GeniSys Display Module, part 52067U, the cad cell resistance can be selected and read on the LCD screen. Also, the GeniSys Contractor Tool, part 52082U, can be used for this purpose.
- If these are not available, the cad cell leads can be unplugged from the control and the resistance measured with a meter in the conventional way. Conduct these tests with flame present.

Flame Detection Range
Normal = 0 to 1600 ohms
Limited = 1600 ohms to lockout

Resetting From Restricted or Hard Lockout

- If the control continues to lockout without a satisfied call for heat, or fails the motor relay check, the control enters Hard (restricted) Lockout in order to limit accumulation of unburned oil in the combustion chamber.
- To reset, hold the button down for 15 seconds until the red light turns off and the yellow light turns on.

- Always verify the control functions according to all specifications before leaving the installation site.
- Replace the control if it does not operate as specified.

Startup / Checkout

WARNING **Explosion and Fire Hazard**

Failure to follow these instructions could lead to equipment malfunction and result in heavy smoke emission, soot-up, hot gas puff-back, fire and asphyxiation hazards.

- Do not attempt to start the burner when excess oil has accumulated in the appliance, the appliance is full of vapor, or when the combustion chamber is very hot.
- Do not attempt to re-establish flame with the burner running if the flame becomes extinguished during start-up, venting, or adjustment.
- **Vapor-Filled Appliance:** Allow the unit to cool off and all vapors to dissipate before attempting another start.
- **Oil-Flooded Appliance:** Shut off the electrical power and the oil supply to the burner and then clear all accumulated oil before continuing.
- If the condition still appears unsafe, contact the Fire Department. Carefully follow their directions.
- Keep a fire extinguisher nearby and ready for use.

If the burner or control fails any of the following tests, recheck control wiring. If the burner or control still fails any tests, replace the control.

Check Safety Features

- Safe Start Check
  1. Place a jumper across the cad cell terminals.
  2. Refer to the steps for “Start up burner/set combustion” and have the system call for heat.
  3. Burner must not start. Verify that the green light is on continuously and that the control remains in Standby mode.
  4. End the call for heat and remove the cad cell jumper.
- Simulate Flame Failure and Ignition Failure
  1. Refer to the steps for “Start up burner/set combustion” and have the system call for heat.
  2. After flame is established and the burner igniter turns off, close the hand valve in the oil supply line.
  3. At flame loss, the control will enter Recycle mode. Verify that the green light is flashing. The control will remain in Recycle for 60 seconds.
  4. After the 60 second recycle period, the control will try to restart the system.
  5. After the 15 second lockout time, the control will lock out the burner and the reset button will flash. Verify that the burner motor and igniter are off and that the burner oil solenoid valve (if used) is not energized.
  6. Open the hand valve in the oil line.
  7. Click the reset button and verify that the red light in the reset button shuts off and that the burner lights.
  8. End the call for heat.
- Before leaving the installation, verify that all thermostat and boiler/furnace control wiring is correct. Consult heating appliance manual for directions.

Set combustion with instruments

CAUTION **Oil-Burning Equipment shall be connected to flues having sufficient draft at all times to ensure safe and proper operation of the burner.**

1. Allow the burner to run for approximately 5 to 10 minutes.
2. Set the stack or over-fire draft to the level specified by the appliance manufacturer.
   - **Natural Draft Applications;** typically over-fire draft is -0.01” or -0.02” w.c.
   - **Direct Venting**; typically may not require draft adjustment.
   - **High Efficiency/Positive Pressure Appliances**; also vary from traditional appliances (see manufacturer’s recommendations).
3. Follow these four steps to properly adjust the burner:

   Step 1: Adjust the air shutter/band until a trace of smoke is achieved.

   Step 2: At the trace of smoke level, measure the CO_2 (or O_2) . This is the vital reference point for further adjustments. Example: 13.5% CO_2 (2.6% O_2)

   Step 3: Increase the air to reduce the CO_2 by 1.5 to 2 percentage points. (O_2 will be increased by approximately 2.0 to 2.7 percentage points.) Example: Reduce CO_2 from 13.5% to 11.5% (2.6% to 5.3% O_2).

Step 4: Recheck smoke level. It should be Zero.

This procedure provides a margin of reserve air to accommodate variable conditions.

If the draft level has changed, recheck the smoke and CO_2 levels and readjust the burner if necessary.

4. Once combustion is set, tighten all fasteners on air band, air shutter and head adjusting plate or escutcheon plate.
5. Burner equipped with cover - Reinstall the cover and repeat Steps 2 and 4. If CO_2 increases (O_2 decreases), remove the cover and adjust the air setting so the CO_2 (O_2) with cover on meets requirements of Step 3.
6. Start and stop the burner several times to ensure satisfactory operation. Test the primary control and all other appliance safety controls to verify that they function according to the manufacturer's specifications.

Perform Regular Maintenance

WARNING **Annual Professional Service Required**

Tampering with or making incorrect adjustments could lead to equipment malfunction and result in asphyxiation, explosion or fire.

- DO NOT TAMPER WITH THE UNIT OR CONTROLS - CALL YOUR SERVICE PERSONNEL.
- To ensure continued reliable operation, a qualified service technician must service this burner annually.
- More frequent service intervals may be required in dusty or adverse environments.
- Operation and adjustment of the burner requires technical training and skillful use of combustion test instruments and other test equipment.

- ☐ Replace the oil supply line filter. The line filter cartridge must be replaced to avoid contamination of the fuel unit and nozzle.
- ☐ Inspect the oil supply system. All fittings should be leak-tight. The supply lines should be free of water, sludge and other restrictions.
- ☐ Remove and clean the pump strainer if applicable.
- ☐ Verify the nozzle is the one originally specified by the appliance manufacturer and replace the nozzle with one having the exact specifications from the same manufacturer.
- ☐ Clean and inspect the electrodes for damage, replacing any that are cracked or chipped.
- ☐ Check electrode tip settings. Replace electrodes if tips are rounded.
- ☐ Inspect the igniter spring contacts. Clean or replace if corroded.
- ☐ Clean the cad cell grid surface, if necessary.
- ☐ Make sure Low Firing Rate Baffle is in place if required for the burner application. Omitting the baffle can result in unacceptable burner combustion.
- ☐ Inspect all gaskets. Replace any that are damaged or would fail to seal adequately.
- ☐ Inspect the combustion head and air tube. Remove any carbon or foreign matter. Replace all damaged units with exact parts.
- ☐ Clean the blower wheel, air inlet, air guide, burner housing and static plate of any lint or foreign material.
- ☐ If motor is not permanently lubricated, oil motor with a few drops of SAE 20 nondetergent oil at each oil hole. DO NOT over oil motor. Excessive oiling can cause motor failure.
- ☐ Check motor current. The amp draw should not exceed the nameplate rating.
- ☐ Check all wiring for secure connections or insulation breaks.
- ☐ Check the pump pressure and cutoff function.
- ☐ Check primary control safety lockout timing.
- ☐ Check ignition system for proper operation.
- ☐ Inspect the vent system and chimney for soot accumulation or other restriction.
- ☐ Clean all flue passages and flue pipe. Replace corroded or damaged pipes.
- ☐ Clean the appliance thoroughly according to the manufacturer's recommendations.
- ☐ Check the burner performance. Refer to the section "Set combustion with test instruments".
- ☐ It is good practice to make a record of the service performed and the combustion test results.

Shutting the Burner Off

CAUTION **Always keep the fuel oil supply valve shut-off if the burner(s) is shut down for an extended period of time.**

Turn off all electric power to the burner.
Note: There could be more than one disconnect switch.

Replace the blower wheel:

1. Turn off all power to the burner before servicing.
2. Disconnect the burner motor wires.
3. Remove the bolts securing the motor to the burner housing.
4. Remove the motor and blower wheel.
5. Remove the existing blower wheel.
6. Referring to the figure below, slide the new blower wheel onto the shaft.
   - Use a feeler gauge to set the wheel-to-motor gap, as shown below. (AF = 0.125 ±1/64 inch, AFG = 0.030 ±1/64 inch)
   - Slide blower wheel toward motor until it contacts feeler gauge.
   - Rotate the blower wheel until the setscrew is centered on the flat of the motor shaft. Tighten the setscrew to secure the wheel.
7. DO NOT use a motor that has endshield openings outside the blower wheel circumference (represented by the dashed line).
8. Install the motor on the burner housing. Tighten screws. Reconnect wires.
9. Restore power, start the burner and perform combustion tests. Refer to the section “Set combustion with test instruments”.

Figure 12. ***Blower wheel assembly***

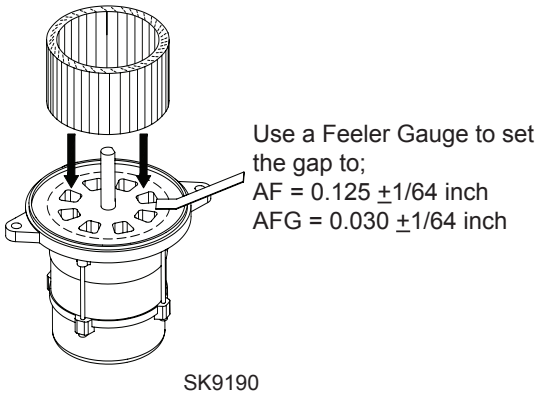

Replacement Parts

For best performance specify genuine Beckett replacement parts

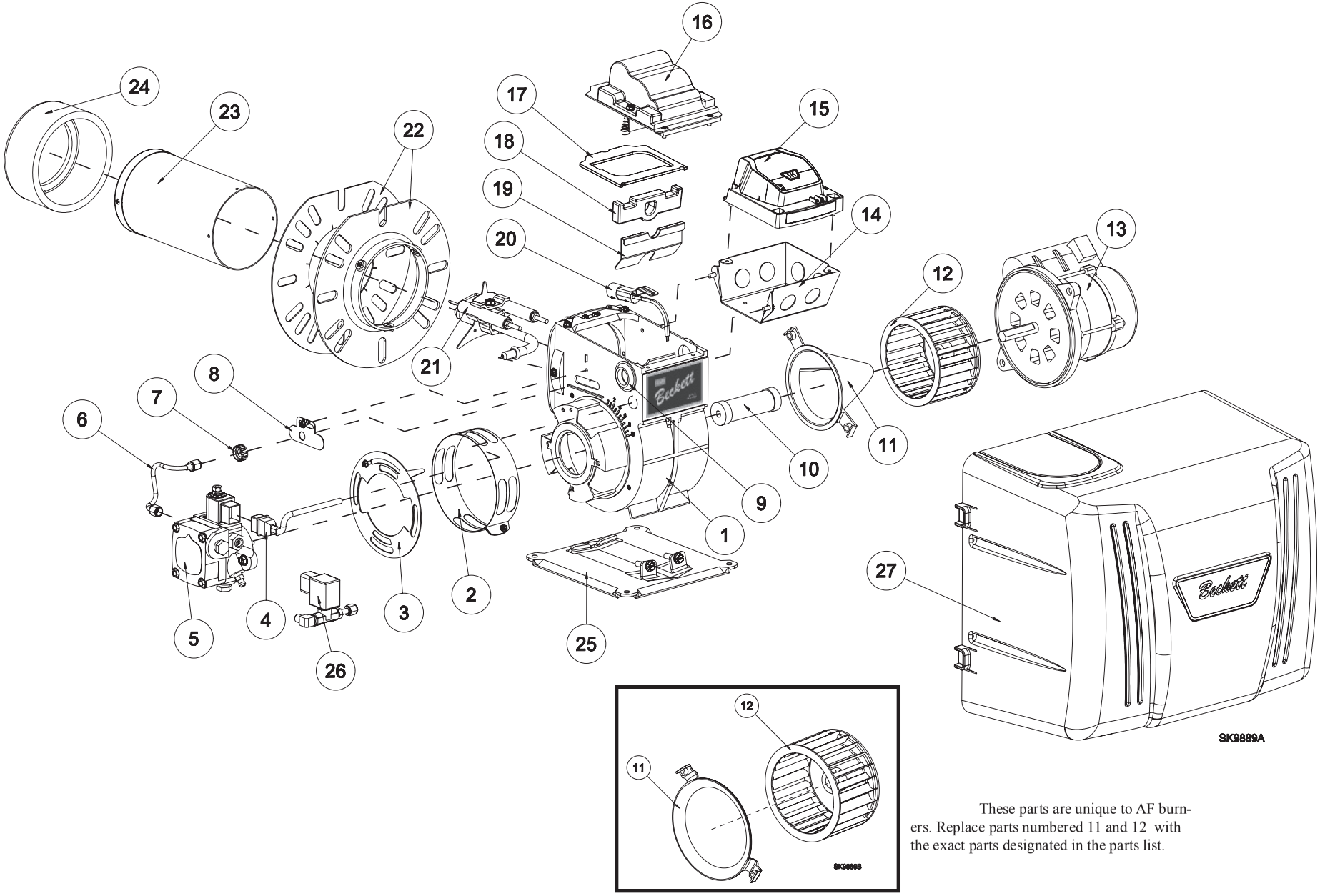

These parts are unique to AF burners. Replace parts numbered 11 and 12 with the exact parts designated in the parts list.

#	Part No.	Description
1		Burner Housing Assembly
2	Specify*	Air Band - Specify # of slots
3	Specify*	Air Shutter - Specify # of slots
4	21807U	Valve Cordset
Not Shown	21887U	PD Timer Delay Cordset
5	2184404U	CleanCut Pump
6	5394	Copper Oil Line - 8”
7	3666	Splined Nut
8	3493	Escutcheon (F & L1/L2 heads)
	5941	Head Adjusting Plate (V1 head)
9	2139	Hole Plug
10	2454	Coupling
11	31231U (AFG) 31841U (AF)	Air Guide (AFG) Air Inlet Bell (AF)
12	2999U (AFG) 2459U (AF)	Blower Wheel (AFG) Blower Wheel (AF)
13	21805U 4189	PSC Motor Mounting Screws
14	5770	Electrical Box
15	7505A	Replaces R7184A - Interrupted Ignition
	7505B	Replaces R7184B - Pre-time
	7505P	Replaces R7184P - Pre and Post-time**
16	51771U	Igniter & Base Plate

#	Part No.	Description
17 & 18	51304	Igniter Gasket Kit
19	5880	Low Firing Rate Baffle
20	7006U	Cad Cell Detector
21	5780	Electrode Kit - F Head up to 9”
	5782	Electrode Kit - F Head over 9”
	5940	Electrode Kit - M Head up to 9”
22	5432 3616	Universal Flange w/ Gasket Gasket Only
23	Specify *	Air Tube Combination
24	Specify *	Heat Shield, Ceramic or Fiber
25	5685	Pedestal Kit
26	2182602U	Solenoid Valve Kit (delay)
27	52064xxU*	Cover

* Contact your Beckett Representative for part number and pricing.
** Contact your Beckett Representative for available pre and post time settings.

Limited Warranty Information

The R. W. BECKETT CORPORATION ("Beckett") warrants to persons who purchase its "Products" from Beckett for resale, or for incorporation into a product for resale ("Customers"), that its equipment is free from defects in material and workmanship. To qualify for warranty benefits, products must be installed by a qualified service agency in full compliance with all codes and authorities having jurisdiction, and used within the tolerances of Beckett's defined product specifications.

To review the complete warranty policy and duration of coverage for a specific product, or obtain a written copy of warranty form 61545, please choose one of the following options:

1. Visit our website at: www.beckettcorp.com/warranty
2. Email your request to: rwb-customer-service@beckettcorp.com
3. Write to: R. W. Beckett Corporation, P. O. Box 1289, Elyria, OH 44036

NOTE: Beckett is not responsible for any labor cost for removal and replacement of equipment.

THIS WARRANTY IS LIMITED TO THE PRECISE TERMS SET FORTH ABOVE, AND PROVIDES EXCLUSIVE REMEDIES EXPRESSLY IN LIEU OF ALL OTHER REMEDIES, AND IN PARTICULAR THERE SHALL BE EXCLUDED THE IMPLIED WARRANTIES OF MERCHANTABILITY AND FITNESS FOR A PARTICULAR PURPOSE. IN NO EVENT WILL BECKETT BE LIABLE FOR ANY INCIDENTAL OR CONSEQUENTIAL DAMAGE OF ANY NATURE. Beckett neither assumes, nor authorizes any person to assume for Beckett, any other liability or obligation in connection with the sale of this equipment. Beckett's liability and Customer's exclusive remedy is limited to the cost of the product.

Beckett™
CORPORATION

USA: P.O. Box 1289 • Elyria, Ohio 44036
Canada: R.W. Beckett Canada, Ltd. • Unit #3, 430 Laird Road • Guelph, Ontario N1G 3X7
www.beckettcorp.com

Part Number 6104 BAFG R09, Printed in the U.S.A. 01/11