Beckett®

RF BURNER MANUAL

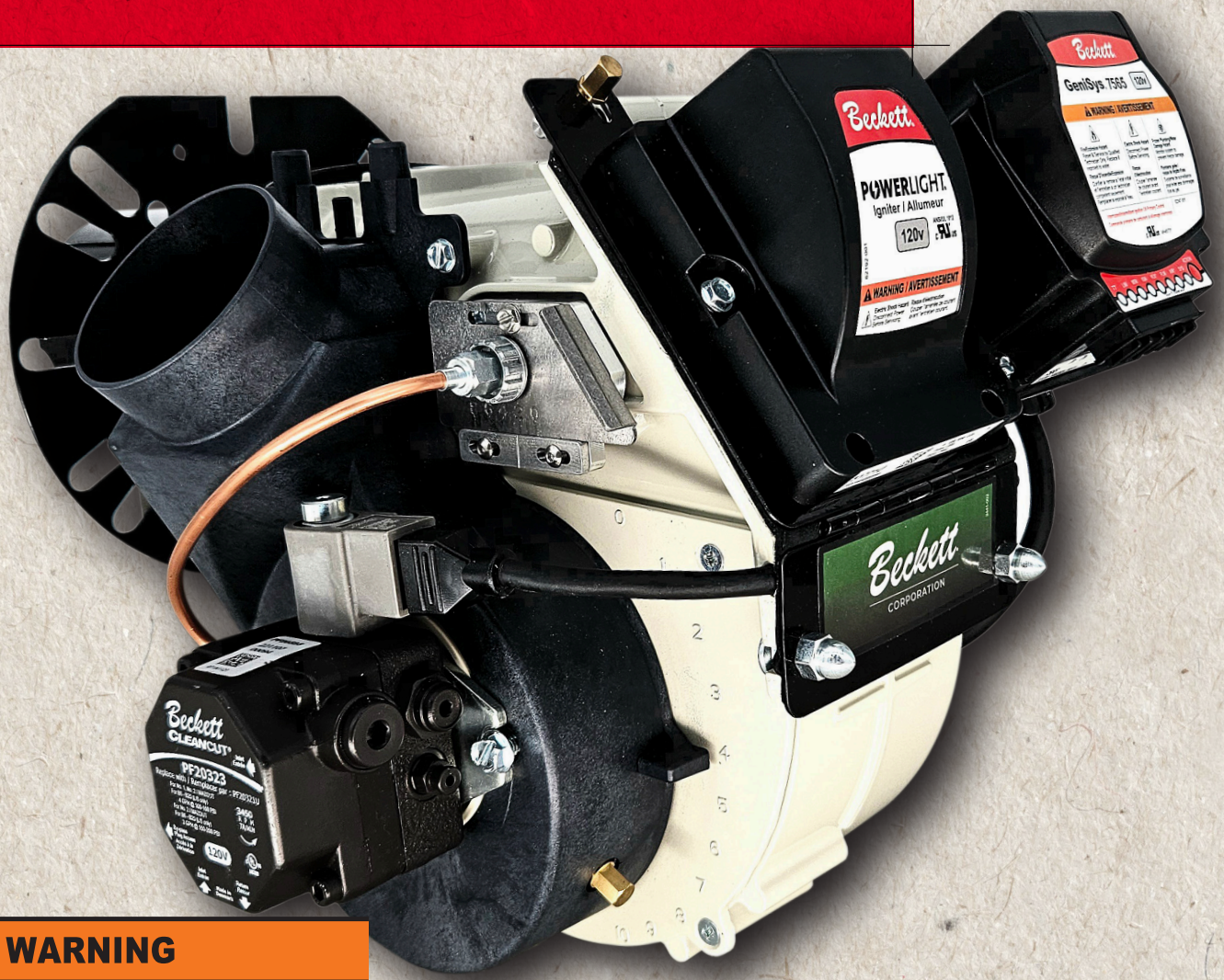

WARNING

Potential for Fire, Smoke and Asphyxiation Hazards

Incorrect installation, adjustment, or misuse of this burner could result in death, severe personal injury, or substantial property damage.

To the Homeowner or Equipment Owner:

- Please read and carefully follow all instructions provided in this manual regarding your responsibilities in caring for your heating equipment.
- Contact a professional, qualified service agency for installation, start-up or service work.
- Save this manual for future reference.

To the Professional, Qualified Installer or Service Agency:

- Please read and carefully follow all instructions provided in this manual before installing, starting, or servicing this burner or heating system.
- The Installation must be made in accordance with all NFPA (National Fire Protection Association®) state and local codes having jurisdiction.

Beckett

To the Owner:

Thank you for purchasing a Beckett burner for use with your heating appliance. Please pay attention to the Safety Warnings contained within this instruction manual. Keep this manual for your records and provide it to your qualified service agency for use in professionally setting up and maintaining your burner.

Your Beckett burner will provide years of efficient operation if it is professionally installed and maintained by a qualified service technician. If at any time the burner does not appear to be operating properly, **immediately contact your qualified service agency** for consultation.

We recommend annual inspection/ service of your heating system by a qualified service agency.

Daily – Check the room in which your burner/appliance is installed. Make sure:

- Air ventilation openings are clean and unobstructed
- Nothing is blocking burner inlet air openings
- No combustible materials are stored near the heating appliance
- There are no signs of fuel or water leaking around the burner or appliance

Weekly

- Check your fuel tank level. Always keep your fuel tank full, especially during the summer, in order to prevent condensation of moisture on the inside surface of the tank.

Contents

General Information

Hazard Definitions

DANGER **Indicates a hazardous situation, which, if not avoided, will result in death or serious injury.**

WARNING **Indicates a hazardous situation, which, if not avoided, could result in death or serious injury.**

CAUTION **Indicates a hazardous situation, which, if not avoided, could result in minor or moderate injury.**

Within the boundaries of the hazard warning, there will be information presented describing consequences if the warning is not heeded and instructions on how to avoid the hazard.

NOTICE Intended to bring special attention to information, but not related to personal injury or property damage.

WARNING **Owner's Responsibility**

Incorrect installation, adjustment, and use of this burner could result in severe personal injury, death, or substantial property damage from fire, carbon monoxide poisoning, soot or explosion.

Contact a professional, qualified service agency for the installation, adjustment and service of your oil heating system. This work requires technical training, trade experience, licensing or certification in some states and the proper use of special combustion test instruments.

Please carefully read and comply with the following instructions:

- Never store or use gasoline or other flammable liquids or vapors near this burner.
- Never attempt to burn garbage or refuse.
- Never attempt to light the burner/appliance by throwing burning material into the appliance.
- Never attempt to burn any fuel not specified and approved for use in this burner.
- Never restrict the air inlet openings to the burner or the combustion air ventilation openings in the room.

Commonly Used Tools:

- Beckett T28 Bleed Wrench
- Beckett 52100L Gauge Kit
- Smoke Test Kit
- Combustion Gas Analyzer
- 1/4" Nut driver or socket with extension
- 5/16" Nut driver or socket with extension
- 3/8" Nut driver or socket with extension
- 1/8" Allen wrench
- 5/32" Allen wrench (bypass plug)
- 1/4" Allen wrench (for pump plug removal)
- 7/16" Open end wrench for oil line fittings
- 5/8" Open end wrench for nozzle replacement and pump plug removal
- 3/4" Open end wrench for nozzle replacement
- Phillips screwdriver (Posi-drive, #1 or #2)
- 1/8" Slotted screwdriver (for pump pressure adjustment and bypass plug)
- 1/4" Slotted screwdriver
- Needle nose pliers (for disconnecting flag terminals)
- 11/16" Box end wrench (for loosening spline nut)

Other Tools:

- For housing disassembly (usually not required): T20 Torx driver
- For NLEA replacement and re-zeroing forward head stop (if necessary): T15 Torx driver
- For removing pipe plug to install pressure differential switch kit: 3/16" Allen wrench

Figure 1. Burner label location

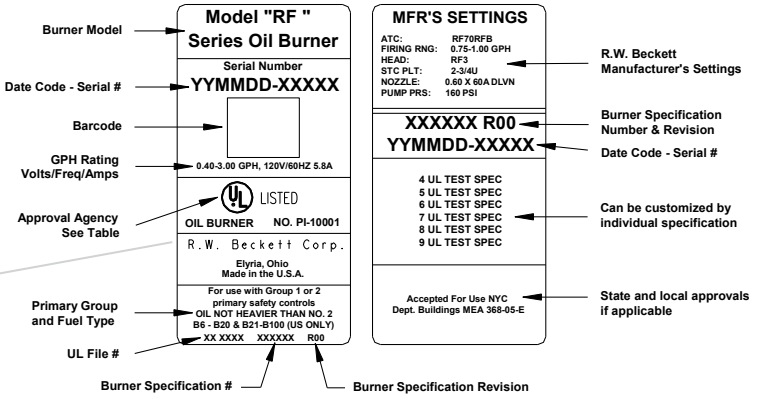

WARNING **Do NOT Alter the Original Burner Design**

Tampering with or altering the burner design could seriously impair performance, resulting in loss of static pressure, damage to the system components, reduced air volume, heavy smoke, flame impingement, appliance sooting, hot gas puff-back, and asphyxiation or fire hazards.

Maintain the design to its original configuration. Only use parts specified for the RF Burner. Do NOT operate without an air guide in the chassis or without a primary safety control installed.

Any design alteration will:

- Void UL Listing
- Void manufacturer's warranties
- Seriously impact burner performance
- Greatly increase your liability risk

WARNING **Impaired Burner Performance and Fire Hazard.**

Do NOT operate the burner beyond specifications outlined in the following Table.

- For applications beyond these limits, consult Beckett Technical Service at 1-800-645-2876.
- NOTE: Some packaged appliances with burners may be agency listed as a unit to operate beyond these limits. Consult the appliance manufacturer's specifications and agency approvals for verification.

CAUTION **Frozen Plumbing and Water Damage Hazard**

If the residence is unattended in severely cold weather, burner primary control safety lockout, heating system component failures, power outages or other electrical system failures could result in frozen plumbing and water damage in a matter of hours. For protection, take preventive actions such as having a security system installed that operates during power outages, senses low temperature and initiates an effective action. Consult with your heating contractor or a home security agency.

NOTICE NOTICE (to the homeowner): Annual inspection/maintenance by a qualified service provider is always required. If any of the following apply, more frequent annual inspection/maintenance is required.

- The burner on time (run time) is frequently less than 5 minutes ("short cycling").
- The burner operates year-round (domestic hot water applications).
- The fuel type/biodiesel content has changed or is unknown.

Figure 2 – Burner Specifications

Capacity *(Note 1)*	RF Burner: 0.38 – 3.00 GPH Refer to **Figure 3** and **Figure 4** for further information
Certifications/ Approvals	ANSI / UL296 and CSA – B140.0
Approved Fuels	USA: Heating Oil – No. 1 Per ASTM D396 (S15, S500, S5000); Heating Oil – No. 2 Per ASTM D396 (S15, S500, S5000); Heating Oil – to B20 Per ASTM D396 (S15, S500, S5000); B100 Biodiesel Per ASTM D6751; Biodiesel Blends from B21-B100 made from ASTM D6751 B100 and #1 or #2 from D396; Renewable Diesel in any percentage up to R100 that meets ASTM D975. No. 2 Heating Oil. Canada: Heating Oil Types 0,1,2 Per CAN/CGSB-3.2 **WARNING** **SEE WARNING SECTION BELOW**
Nominal Input Voltage	120 VAC / 60Hz / 1 Phase
Current	5.8 Amps Maximum
Motor	Beckett p/n 21805: 1/7 HP, 3450 RPM, PSC, NEMA 48
Igniter	Beckett p/n 51838U: Electronic Solid State rated for continuous duty.
Fuel Pump *(Note 2)*	Beckett p/n PF2032x Solenoid coil 120VAC Inlet Pressure: 3 psi maximum Outlet Pressure: 100-200 psi
Air Tube Combinations	ATC Codes and selection – **See Figure 3**
Dimensions (Less Tube)	Height: 10-7/8" Width: 13-3/4" Depth: 9-7/8" Air Tube: 4.0" Ø
Operating Temperature *(Note 3)*	+32°F (0°C) Minimum +140°F (60°C) Maximum at nominal voltage
Environmental	5% to 95% RH, non-condensing

Note 1: Approval Agency listings rate these burners for 0.38 – 3.00 GPH. However, the firing rate range is limited by the specific air tube combination being used. Refer to *Figure 4.*
Note 2: See appliance manufacturer's burner specifications for recommended pump discharge pressure.
Note 3: Operating temperatures above or below listed specifications must be approved by R.W. Beckett.

WARNING **Use ONLY Fuels Listed for Use with this Burner**

Use of unapproved fuels could result in explosion, fire, personal injury or death, and/or damage to equipment and property.

- DO NOT USE Raw Vegetable Oil (RVO) or any fuel blended with RVO
- DO NOT USE with Flammable Liquids; Gasoline, LP gas, charcoal lighter fluid, etc.
- For a listing of alternative fuels please refer to Beckett's website (https://www.beckettcorp.com)

Figure 3. – Burner in a Box - GPH Rates

Part Number	Firing Rate (GPH)	Retention Head	Throttle Ring	Air Guide (inch)
RF101	0.38 - 1.00	6 - slot	6 rib	2.0
RF102	0.90 - 1.75	9 - slot	4 rib	2.5

Note: Burners use 2-3/4” static plate

NOTICE **Special Requirements**

- Burner and/or appliance installations in the United States must comply with NFPA 31 (National Fire Protection Association) Standard for the Installation of Oil-Burning Equipment, NFPA 70 (National Electric Code), as well as all state and local authorities having jurisdiction.
- Installations in Canada must comply with the latest editions of CSA B139 (Installation Code for Oil Burning Equipment), CSA Standard C22, Part 1 (Canadian Electric Code), and all applicable local codes.
- Concealed damage — If you discover damage to the burner or controls during unpacking, notify the carrier at once and file the appropriate claim.
- When contacting Beckett for service information
  - — **Please ensure you are connected to the burner with the MyTechinician App**
  - — **Record the burner serial number. You will find the serial number on the silver label located on the left rear of the burner. Refer to *Figure 1*.**

NOTICE **Fuel Supply System Compatibility**

The fuel supply system design and components must be compatible with the fuel being used in the appliance. Follow all guidelines and best practices recommended by the fuel supplier, NFPA 30 & NFPA 31, and any state or local ordinances for safe storage, filtering, conditioning, and delivery to the burner.

NOTICE The adjustable flange and the RF burner intake cover are not intended for use with portable equipment. Contact R.W. Beckett for any non-residential applications of the RF burner.

Figure 4. – Combustion Chamber Dimensions

Chamber Dimensions (inches)					
Firing Rate (GPH)	Round I.D.	Rectangular		Height	Floor to nozzle
		Width	Length		
0.50	8	7	8	12	5-6
0.75	9	8	9	12	5-6
1.00	10	9	10	12.5	5-6
1.25	11	10	11	12.5	5-6
1.50	12	11	12	13	6-7
2.00	14	12	15	13.5	6-7
2.50	16	13	17	14	7-8
3.00	18	14	18	15	7-8

Figure 5. – BTU vs. Chamber Pressure

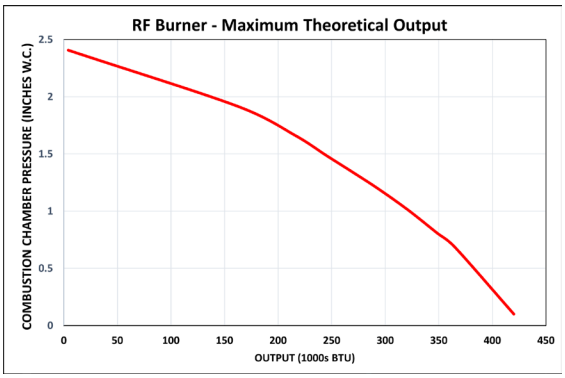

Theoretical maximum output (BTU) for given combustion chamber pressure (in.w.c.)

WARNING **Professional Service Required**

Incorrect installation, adjustment, and use of this burner could result in severe personal injury, death, or substantial property damage from fire, carbon monoxide poisoning, soot or explosion.

Please read and understand the manual supplied with this equipment. This equipment must be installed, adjusted and put into operation only by a qualified individual or service agency that is:

- Licensed or certified to install and provide technical service to oil heating systems.
- Experienced with all applicable codes, standards and ordinances.
- Responsible for the correct installation and commission of this equipment.
- Skilled in the adjustment of oil burners using combustion test instruments.

The installation must strictly comply with all applicable codes, authorities having jurisdiction and the latest revision of the National Fire Protection Association Standard for the installation of Oil-burning Equipment, NFPA 31 (or CSA-B139 in Canada).
Regulation by these authorities takes precedence over the general instructions provided in this installation manual.

Inspect/Prepare Installation Site

Inspect Chimney or Direct Vent System

WARNING **Fire, Smoke & Asphyxiation Hazard**

- Carefully inspect the chimney or exhaust vent system.
- Make sure it is properly sized and in good working condition.
- Follow the instructions supplied by the appliance manufacturer.
- The installation must strictly comply with all applicable codes, authorities having jurisdiction and the latest revision of the National Fire Protection Association Standard NFPA 31 for the installation of chimneys and vent sizing, (or CSA-B139 and CSA-B140 in Canada).
- Regulation by these authorities takes precedence over the general instructions provided in this installation manual.

Getting to know your new burner:

Access to the 4x4 electrical box and the interior of the burner can be easily achieved by loosening (no need to remove them completely) the 2 igniter/control plate locking screws and rotating them forward. The igniter and control will now rotate back for easy access. It is not necessary to remove the igniter or control from the hinged plate unless they are being replaced.

The head position is calibrated at the factory such that the “0” setting is the full forward position. The head positioning in the RF burner is used primarily for adjusting the shape of the flame and controlling the manner in which the air mixes with the fuel. When the head is in the “0” position, nearly all of the air flows through the center of the head (near the nozzle). When the head is moved back to higher numbered positions, the amount of air that flows around the outside of the head increases. Although the head position may affect total air flow slightly, it is not meant to control the amount of excess air. That is accomplished independently with the air adjustment lever and locking screw. See **Figure 6**. For OEM applications the head will be set to the correct head position from the factory. If the head position needs to be adjusted to meet the appliance manufacturer’s recommendations, first loosen the igniter/control plate locking screws and then rotate the igniter control plate back to eliminate the pressure between the igniter contacts and the nozzle line electrodes. See **Figure 6**. Next, loosen the escutcheon plate lock screw and the spline nut and then move the escutcheon plate to the correct position as indicated by the guide bar indicator mark. See **Figure 7**. If no OEM head position is available, the head position should be adjusted to position “2” as a starting point. Do not adjust the guide bar position unless the full forward position is not the “0” position.

The air adjustment for the RF is a single adjustment. Simply loosen the air adjustment locking screw (no need to remove it) and rotate the air adjustment lever to the recommended number setting in the OEM guide before beginning combustion testing. Lower numbers reduce the air, higher numbers increase the air. During final adjustment with your combustion analyzer, it is not necessary to tighten the air adjustment locking screw until the final setting is achieved.

NOTE: Always verify that the air adjustment locking screw and the 2 igniter/control plate locking screws are secured before completing the burner installation.

The RF burner is supplied with 3 air guide sizes. The default air guide is the white, midsize (2.0”) air guide. The air guide can be changed (if necessary) by removing the motor/blower wheel subassembly to gain access to the 2 screws retaining the air guide on the inside of the burner. **See Figure 8**. The red (1.5”) air guide will improve air adjustability for low firing rate and/or natural draft applications. The blue (2.5”) air guide will increase the available air capacity for high firing rate and/or positive pressure appliances.

The RF burner comes with a spacer installed between the motor housing and the blower wheel to assure the required 1/2” spacing. Always re-install this spacer to assure the proper position of the blower wheel. Do not force the blower wheel against the spacer as this may cause excessive friction and higher operating amps.

The RF burner is supplied ready for ducted combustion air. If outside combustion air will be ducted to the burner, a 3” aluminum adjustable elbow is recommended for connection to the combustion air intake. Always connect the ducting before tuning the burner because the ducting may affect the air flow to the burner and affect the settings. Refer to the temperature compensation chart, see **Figure 9** for ducted combustion air. If the RF will only be using basement air for combustion, re-install the intake cover after hook-up to help prevent foreign objects from entering the intake. The intake is designed not to restrict air flow, so it will not affect your basement air settings.

NOTICE The published burner ratings apply for altitudes up to 2000 feet above sea level. For altitudes higher than 2000 feet, apply a derating of approximately 2% per 1000 feet. Contact R.W. Beckett for additional information.

RF Burner Components - Air Intake Cover Removed

Figure 6.

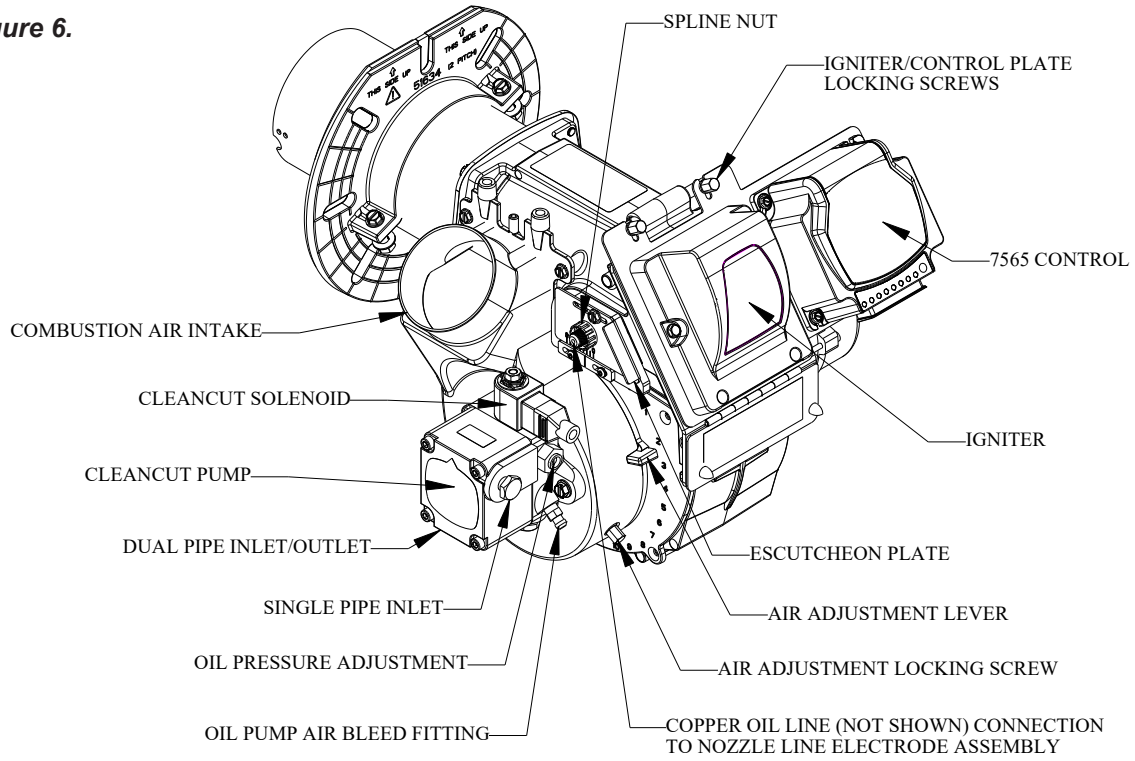

Head Positioning Detail

Figure 7.

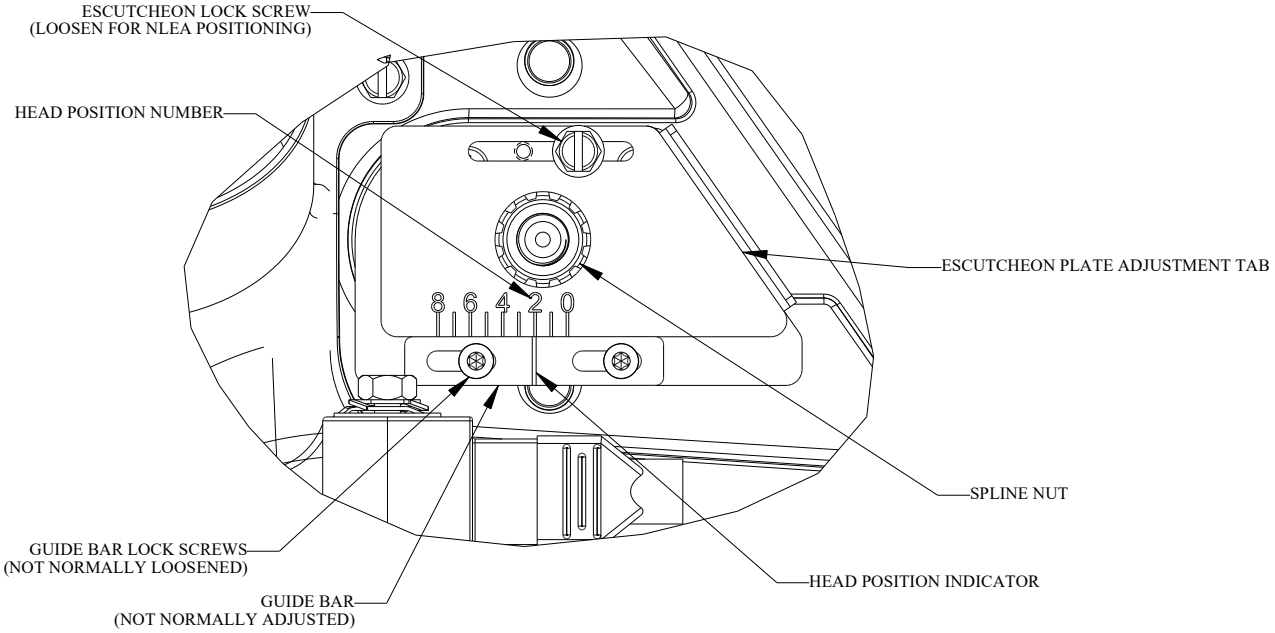

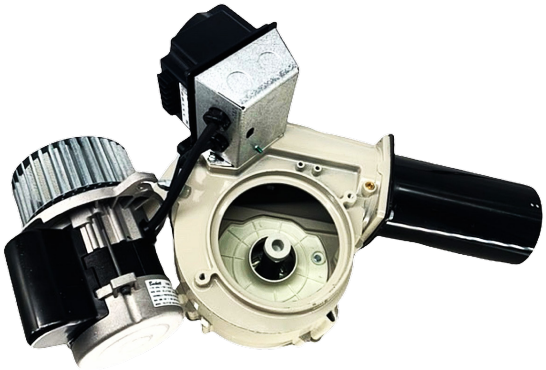

Figure 8. – Air Guide Access With Motor Removed

WARNING

Adequate Combustion and Ventilation Air Supply Required

Failure to provide adequate air supply could seriously affect the burner performance and result in damage to the equipment, asphyxiation, explosion or fire hazards.

- The burner cannot properly burn the fuel if it is not supplied with a reliable combustion air source.
- Follow the guidelines in the latest editions of the NFPA 31 and CSA-B139 regarding providing adequate air for combustion and ventilation.
- Follow the instructions given by the appliance and power venter (if used) manufacturers.
- Outside combustion air is required for direct venting.

Appliance located in confined space

The confined space should have 2 permanent openings: one near the top of the enclosure and one near the bottom of the enclosure. Each opening shall have a free area of not less than 1 square inch per 1,000 BTUs per hour of the total input rating of all appliances within the enclosure. The openings shall have free access to the building interior, which should have adequate infiltration from the outside

Exhaust fans and other air-using devices

Size air openings large enough to allow for all air-using devices in addition to the minimum area required for combustion air. If there is any possibility of the equipment room developing negative pressure (because of exhaust fans or clothes dryers, for example), either pipe combustion air directly to the burner or provide a sealed enclosure for the burner and supply it with its own combustion air supply.

Combustion air supply

Direct air supply and sidewall venting

When installing an outside air adapter **(Beckett Part Number 52682U)**, refer to the instruction sheet supplied with the adapter. This kit contains a 4” fresh air intake hood, a 3” adjustable elbow for connection at the burner intake and a 4” x 3” reducer to adapt the recommended 4” supply ducting to the burner intake.

Combustion Air Temperature at Burner During Setup	CO2 Range	O2 Range
-25°F to 5°F	10.5% to 11.0%	6.0% to 6.7%
5°F to 35°F	11.0% to 11.5%	5.3% to 6.0%
35°F to 65°F	11.5% to 12.5%	4.0% to 5.3%
above 65°F	12.5% to 13.0%	3.3 % to 4.0%

Figure 9. – Compensation For Outside Combustion Air Temperature

WARNING

Follow the Outside Air Kit Instructions Exactly

Failure to comply could result in impaired combustion, appliance soot-up, puffback of smoke, and fire or asphyxiation hazards.

- Do not attempt to install outside air piping to the burner without using the outside air adapter kit and instructions.

This kit allows combustion air to be piped directly to the burner. The RF outside air adapter kit may also be used for chimney vent applications that require outside combustion air and / or combustion air proving.

The Beckett Air Proving Switch Kit can be installed on any RF Burner and connected directly to the external terminals labeled “AIR” on a 7565 control. Please refer to the control manual for further details. The kit provides an additional safety circuit that will shut down the burner if combustion air is not available due to intake blockage or fan failure. In some installations (especially high firing rate installations), the Low Pressure (0.25” water column) switch kit may be required to avoid nuisance tripping. When adjusting a burner with an outside air supply, it is important to compensate for the incoming air temperature at the burner because colder air is more dense. Use **Figure 9** as a guide to compensate for the air temperature at the burner if you are connecting an outside air supply. Note that these are guidelines and do not supersede requirements for zero smoke and low CO at any air temperature.

Outside air kit applications

Refer to separate instruction sheet(s) included with any outside air kit or power vent system being installed.

Clearances to burner and appliance

- Provide space around burner and appliance for easy service and maintenance.
- Check minimum clearances against those shown by the appliance manufacturer and by applicable building codes.

Combustion chamber - Burner retrofitting

Verify that the appliance combustion chamber provides at least the minimum dimensions given in ***Figure 4***. Smaller chamber dimensions may result in oil impingement and excessive smoke or CO levels. Contact Beckett Technical Service for additional guidance.

WARNING **Correct Nozzle and Flow Rate Required**

Incorrect nozzles and flow rates could result in impaired combustion, under-firing, over-firing, sooting, puff-back of hot gases, smoke and potential fire or asphyxiation hazards.

Use only nozzles having the flow rate (gph), spray angle and pattern specified by the manufacturer.

Follow the appliance manufacturer's specifications for the required pump outlet pressure for the nozzle, since this affects the flow rate.

- Nozzle manufacturers calibrate nozzle flow rates at 100 psig.
- When pump pressures are higher than 100 psig, the actual nozzle flow rate will be greater than the gph stamped on the nozzle body. (Example: A 1.00 gph nozzle at 140 psig = 1.18 gph)
- Securely tighten the nozzle (90 inch pounds torque).
- For typical nozzle flow rates at various pressures refer to **Figure 10**.
- Damaged nozzles can adversely effect combustion. Take care not to damage the nozzle.

If the nozzle is not installed, confirm specified nozzle from the appliance manufacturer. When multiple options are listed, Delavan nozzles are preferred (www.delavan.com). When specification information is not available for the application refer to the guidelines in **Figure 10**.

Figure 10. Nozzle Flow Rates

Nozzle flow rate U. S. gallons per hour of No. 2 fuel oil when pump pressure (psig) is:					
Nozzle size (rated at 100 psig)	125 psi	140 psi	150 psi	175 psi	200 psi
0.40	0.45	0.47	0.49	0.53	0.56
0.50	0.56	0.59	0.61	0.66	0.71
0.60	0.67	0.71	0.74	0.79	0.85
0.65	0.73	0.77	0.80	0.86	0.92
0.75	0.84	0.89	0.92	0.99	1.06
0.85	0.95	1.01	1.04	1.13	1.20
0.90	1.01	1.07	1.10	1.19	1.27
1.00	1.12	1.18	1.23	1.32	1.41
1.10	1.23	1.30	1.35	1.46	1.56
1.20	1.34	1.42	1.47	1.59	1.70
1.25	1.39	1.48	1.53	1.65	1.77
1.35	1.51	1.60	1.65	1.79	1.91
1.50	1.68	1.77	1.84	1.98	2.12
1.65	1.84	1.95	2.02	2.18	2.33
1.75	1.96	2.07	2.14	2.32	2.48
2.00	2.24	2.37	2.45	2.65	2.83
2.25	2.52	2.66	2.76	2.98	-
2.50	2.80	2.96	-	-	-

Prepare the Burner

Burner fuel unit

Verify that the burner fuel unit is compatible with the oil supply system. For more details, refer to the pump manufacturer's instructions provided with the burner.

Attach air tube (if not already installed)

If using an adjustable flange, slide it onto the airtube. Then attach the air tube to the burner chassis using the four 1/4 - 20 screws provided. Please refer to installation instruction sheet included with flange kit.

Installing a nozzle or servicing the nozzle line assembly (See **Figure 6** and **Figure 7**)

1. Turn off power to burner before proceeding.
2. Disconnect the copper oil line from the nozzle line.
3. Loosen the two locking screws above the igniter and tilt the igniter and control back.
4. Remove the spline nut.

5. Remove the nozzle line assembly from the housing. (Hint: If the nozzle line seems difficult to remove, note the escutcheon plate position first and then loosen the single escutcheon plate lock screw to allow more movement. If necessary, the lock screw and escutcheon plate can be removed entirely for maximum clearance.)
6. If you are installing or replacing the nozzle, the electrodes must be rotated out of the way and the head must be removed.
7. Loosen the electrode clamp screw(s) and move the electrode tips away from the nozzle.
8. Loosen the screw clamping the head to the nozzle adapter and remove the head.
9. To remove an existing nozzle, place a 3/4” open-end wrench on the nozzle adapter and a 5/8” open-end wrench on the nozzle. Use care to avoid contact with the electrode tips.
10. Inspect the nozzle adapter before installing the new nozzle. If it is scratched or damaged on the front face, it should be replaced to avoid oil leakage.
11. Confirm the specified nozzle from the appliance manufacturer. When multiple options are listed, Delavan nozzles are preferred (www.delavan.com). When specification information is not available, refer to the guidelines in **Figure 10**.
12. Install the new nozzle finger tight. Use care to avoid contamination or damage to the nozzle strainer and orifice.
13. Finish tightening the nozzle with the 5/8” and 3/4” wrenches. Do not over-torque the nozzle because this may damage the sealing faces.
14. The electrode tips must be set to the dimensions shown in **Figure 12**. The Beckett Green Gauge kit is the ideal tool for setting the RF electrode tip dimensions.

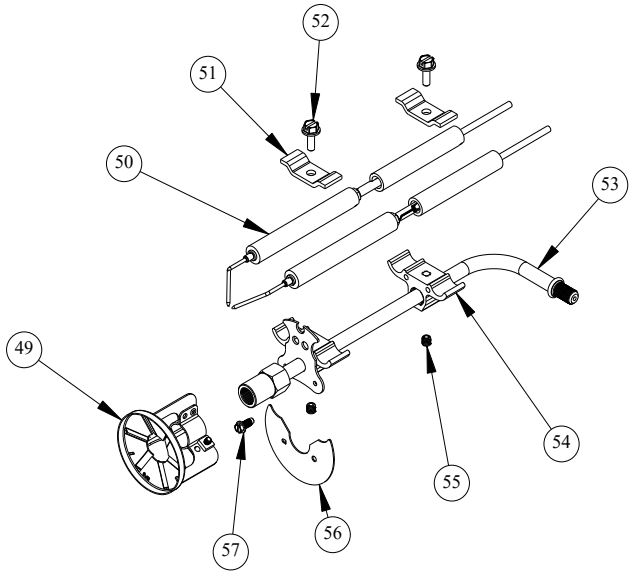

Figure 11. – Nozzle Line Electrode Assembly

15. If the electrodes need to be adjusted or replaced, loosen the electrode clamp screw(s). See **Figure 11**.
16. Slide/rotate the electrodes as necessary to position the tips to the dimensions shown in **Figure 12**.
17. When the adjustment is complete, place the nozzle line assembly back into the burner at the previously noted position. If the position was not noted, insert the assembly into the air tube, ensuring it is flush with the end of the air tube to set the Z-Dimension. Finally, securely tighten the clamp screw(s) to hold the assembly in place

Mount Burner on Appliance

Mounting options

1. Bolt the burner to the appliance using the factory-mounted flange or an adjustable flange, installing the supplied gasket between the flange and the appliance. (Refer to the adjustable flange instructions, if required).

Mounting dimensions

1. A 2° pitch is required when mounting the RF burner unless specified otherwise by the appliance manufacturer. The Beckett universal adjustable flange (**part number 51634U**) provides a perfect 2° pitch.
2. Verify that the air tube installed on the burner provides the correct insertion depth. See ***Figure 13***.
3. The end of the air tube should normally be 1/4” back from the inside wall of the combustion chamber. Never allow the leading edge of the head assembly to extend into the chamber, unless otherwise specified by the heating appliance manufacturer. Carefully measure the insertion depth when using an adjustable flange. Verify the insertion depth when using a welded flange by measuring the 3 and 9 o’clock positions.

Installing the Oil Tank and Supply System

Note: to determine the proper fuel line size, refer to the fuel pump manufacturer’s instructions provided with the

Figure 12. – Electrode Tip Adjustment

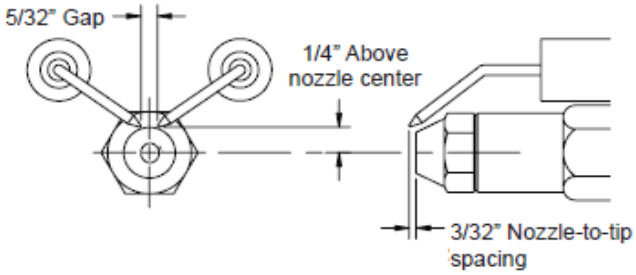

Figure 13. – Mounting Burner in Appliance

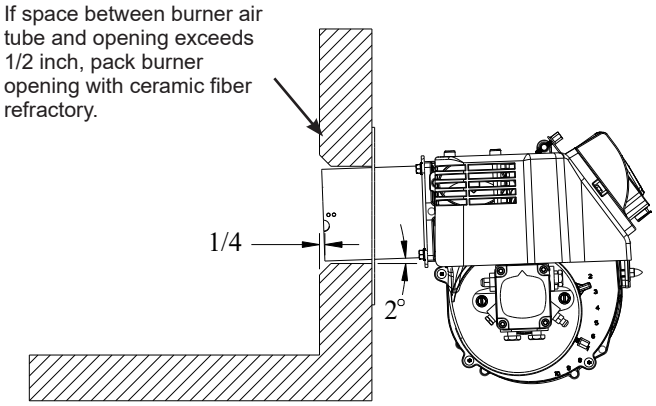

Carefully measure the insertion depth when using an adjustable flange. Verify the insertion depth when using a welded flange.

WARNING **Oil Leak and Fire Hazard**

Install the oil tank following applicable standards in the U.S. by referring to the latest edition of NFPA 31 or CSA-B139 & CSA-B140 in Canada, and all authorities having jurisdiction.

NOTICE **Fuel Supply System Compatibility**

The fuel supply system design and components must be compatible with the fuel being used in the appliance. Follow all guidelines and best practices recommended by the fuel supplier, NFPA 30 & NFPA 31, and any state or local ordinances for safe storage, filtering, conditioning, and delivery to the burner.

Fuel Line Valves and Filter

Install two Firomatic® fusible oil line valves in accessible locations on the oil supply line. Firomatic® fusible oil line valves can be found at https://www.beckettcorp.com/product-category/oil-valves/. Install one Firomatic® valve close to the tank and the other close to the burner, upstream of the filter for service access. Installers may connect oil line into either the side or bottom of the pump. If installing oil line into the side of the pump, this valve needs to clear the air inlet cover, ensure that it is placed at least 1-1/2" from the oil inlet to allow for proper clearance of the air inlet cover.

Refer to NFPA 31 or the Authorities Having Jurisdiction for further information regarding the placement of oil safety valves in the fuel supply system.

Install a Beckett or Westwood oil filter https://www.beckettcorp.com/product-category/oil-filters/#products between the fuel tank shutoff valve and the burner. Both the filter and the valve should be located close to the burner for ease of servicing.

Fuel supply level with or above burner

The burner may be equipped with a single-stage fuel unit for these installations. Connect the fuel supply to the burner with a single supply line if you want a one-pipe system (making sure the bypass plug is NOT installed in burner. Refer to **Figure 14** for typical installation layouts.

CAUTION **Do Not Use Teflon Tape**

Damage to the pump could cause impaired burner operation, oil leakage and appliance soot-up.

- Never use Teflon tape on fuel oil fittings.
- Tape fragments can lodge in fuel line components and fuel unit, damaging the equipment and preventing proper operation.
- Use pipe joint sealant approved for use on kerosene, fuel oils and biodiesel fuels.

Figure 14. – Inside Tank Gravity Feed System

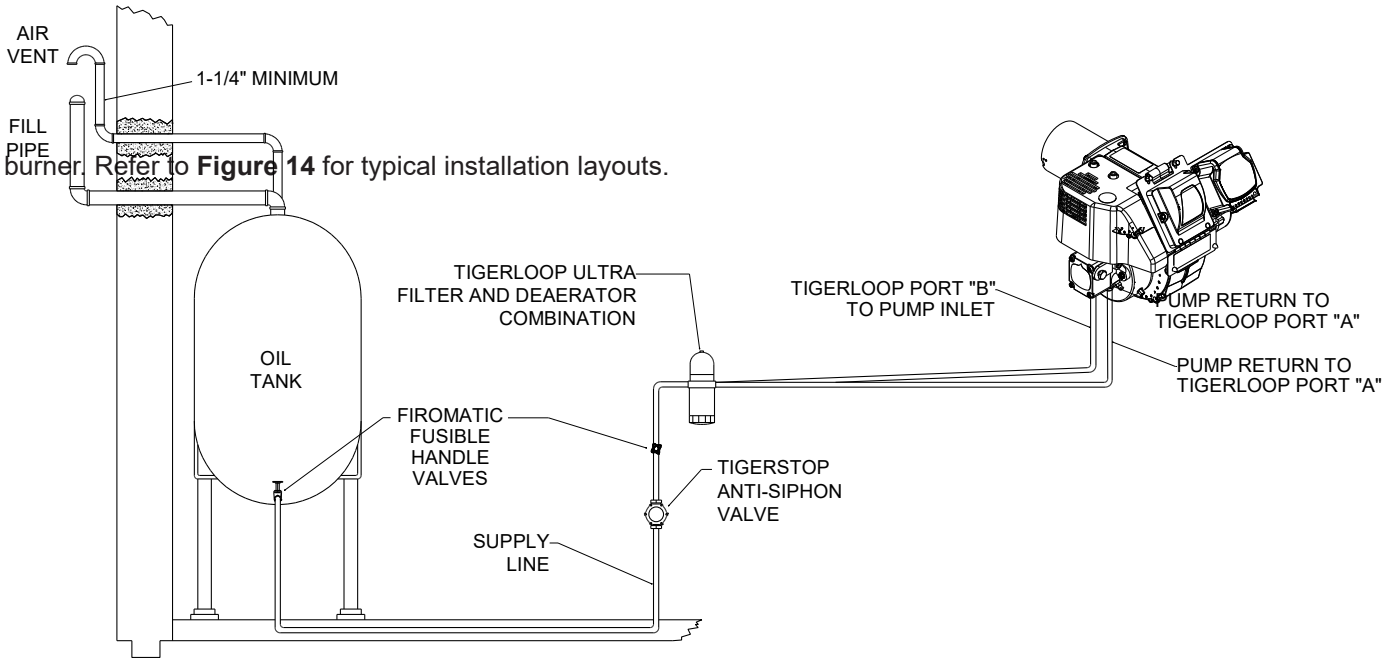

WARNING **Do Not Install Bypass Plug with 1-Pipe System**

Failure to comply could cause Immediate pump seal failure, pressurized oil leakage and the potential for a fire and injury hazard.

- The burner is shipped without the bypass plug installed.
- Install the bypass plug in two-pipe oil supply or when using a TigerLoop deaerator.

CAUTION **Oil Supply Pressure Control Required**

Damage to the filter or pump seals could cause oil leakage and a fire hazard.

- The oil supply inlet pressure to the burner ***cannot exceed 3 psig***.
- Insure that a pressure limiting device is installed in accordance with the latest edition of NFPA 31.
- **Do NOT install valves in the return line.** (NFPA 31, Chapter 8.)
- **Gravity Feed Systems:** Always install an anti-siphon valve in the oil supply line or a solenoid valve (RWB Part # 2182602U) in the pump/nozzle discharge tubing to provide backup oil flow cut-off protection.

the fuel unit.) Manual bleeding of the fuel unit is required on initial start-up. If connecting a two-pipe fuel supply, install the fuel unit bypass plug.

Fuel supply below the level of the burner

When the fuel supply is more than eight feet below the level of the burner, a deaerator is required. Depending on the fuel line diameter and horizontal and vertical length, the installation may also require a two-stage pump. Consult the fuel unit manufacturer's literature, included with the burner, for lift and vacuum capability.

Fuel line installation

- Continuous lengths of heavy wall copper tubing are recommended. **Always use flare fittings. Never use compression fittings.**
- Always install fittings in accessible locations. Proper routing of fuel lines is required to prevent air cavitation and vibration.

NOTICE To further protect the fuel supply system and reduce nozzle orifice plugging with firing rates below 0.75 gph, a dual filtration system can be installed. This typically consists of a 50 micron primary filter, located near the fuel tank and a secondary filter rated for at least 10 microns located near the burner.

WARNING **Electrical Shock Hazard**

Electrical shock can cause severe personal injury or death.

- Disconnect electrical power before installing or servicing the burner.
- Ensure all wiring is properly routed and away from moving parts.
- Provide ground wiring to the burner, metal control enclosures and accessories. (This may also be required to aid proper control system operation.)
- Perform all wiring in compliance with the National Electrical Code ANSI/NFPA 70 (Canada CSA C22.1.

Wire burner

- **Burner packaged with appliance** Refer to appliance manufacturer's wiring diagram for electrical connections.

Burner installed at job site

- Refer to the appliance manufacturer's wiring diagram for electrical connections.
- **GeniSys 7565 Control Orientation:** Any orientation is acceptable, except upside down or with the terminal block (front) facing up, as this may compromise the unit's water resistance.
- Refer to the Genisys 7565 Advanced Burner Control manual for typical burner wiring. The wiring may vary depending on the appliance manufacturer's specifications.
- The 7565 control optional motor-off delay feature (post-purge) requires a constant 120 volts AC power source supplied to the BLACK wire on the control. The RED wire must be connected to the appliance limit circuit in this configuration. Please note that other manufacturers may use different wire colors for power and limit connections.
- Refer to the appliance manufacturer's wiring diagram prior to connecting the burner wiring. All wiring must be in accordance with the latest revision of National Electric Code NFPA 70 and all local codes and regulations. In Canada, all wiring is to be in accordance with the Canadian Electrical Code, Part 1.

Start-Up Burner/Set Combustion

WARNING **Hot Gas Puff-Back and Heavy Smoke Hazard**

Failure to prime the pump properly could result in unstable combustion, hot gas puff-back and heavy smoke.

- Do not allow oil to spray into a hot combustion chamber while bleeding air from the pump.
- Install a gauge in the nozzle discharge port tubing or fully open the pump bleed valve to prevent oil spray from accumulating in the combustion chamber during the air bleed procedure.
- Ensure that all bubbles and froth are purged from the oil supply system before tightening the pump bleed valve.
- Ensure that the appliance is free of oil and oil vapor before starting or resetting the burner.

Priming the Pump

Follow the instructions in the primary control manual to prime the pump or see NOTICE on page 14.

WARNING **Explosion and Fire Hazard**

Failure to follow these instructions could lead to equipment malfunction and result in heavy smoke emission, soot-up, hot gas puff-back, fire and asphyxiation hazards.

- Do not attempt to start the burner when excess oil has accumulated in the appliance, the appliance is full of vapor, or when the combustion chamber is very hot.
- Do not attempt to re-establish flame with the burner running if the flame becomes extinguished during start-up, venting, or adjustment.
- **Vapor-Filled Appliance:** Allow the unit to cool off and all vapors to dissipate before attempting another start.
- **Oil-Flooded Appliance:** Shut off the electrical power and the oil supply to the burner and then clear all accumulated oil before continuing.
- If the condition still appears unsafe, contact the Fire Department. Carefully follow their directions.
- Keep a fire extinguisher nearby and ready for use.

CAUTION **Oil-Burning Equipment shall be connected to flues having sufficient draft at all times to ensure safe and proper operation of the burner.**

Startup / Checkout

Follow the startup/checkout instructions in the primary control manual to start the system and checking of the safety features

WARNING **Burn Hazard**

Internal components and external surfaces of the burner.

- DO NOT TOUCH: This burner may become extremely hot during operation. Contact with the surface can cause severe burns. Always allow the equipment to cool down before handling or performing any maintenance.
- KEEP FLAMMABLE MATERIALS AWAY: Ensure that no flammable materials are in proximity to the hot surfaces to avoid fire hazards.

Set combustion with instruments

1. Install a pressure gauge between the pump outlet and the nozzle line assembly.
2. Locate the appliance manufacturer's recommended burner settings.
3. Verify that the head position is at the recommended head position number.
4. Verify that the air adjustment lever is at the recommended position number. For systems with ducted combustion air, verify that the combustion air setup (outside combustion air ducting, direct vent piping, power vent, etc.) is in place and operating properly.
5. Open all valves in the oil supply line to the burner.
6. Initiate a call for heat.
7. Prime the pump by loosening the air bleed fitting and allowing oil to flow into a suitable container until all froth and bubbles are purged from the pump.
8. Adjust the oil pressure at the pump to the appliance manufacturer's recommended setting.
9. Allow the burner to run for approximately 5 to 10 minutes.
10. Set the stack or over-fire draft to the level specified by the appliance manufacturer.

    Natural Draft Applications;
    typically over-fire draft is -0.01" or -0.02" w.c.

    Direct Venting;
    typically may not require draft adjustment.

    High Efficiency/Positive Pressure Appliances;
    also vary from traditional appliances (see manufacturer's recommendations).
11. Follow these four steps to adjust the burner properly:

    Step 1: Adjust the air band (to a small number) to reduce the air supply until a trace of smoke is achieved.

    Step 2: At the trace of smoke level, measure the O2. Note CO2 may not be accurate for fuels containing biodiesel (see https://www.beckettcorp.com/biofuel-set-up-guide/). This is the vital reference point for further adjustments. Example: 2.6% O2 (or, 13.5% CO2, for #2 Fuel Oil).

    Step 3: Adjust the air band (to a larger number) to increase the air supply until the O2 increases by approximately 2.7 percent. (For #2 Fuel Oil, the CO2 will decrease between 1.5 to 2 percentage points). Example: Increasing O2 from 2.6% to 5.3% will reduce CO2 from 13.5% to 11.5%. For ducted outside air installations, refer to **Figure 9** for combustion air temperature compensation guidelines.

    Step 4: Recheck the smoke level. It should be zero. This procedure provides a margin of reserve air to accommodate variable conditions. If the draft level has changed, recheck the smoke, CO2 / O2 levels and readjust the burner if necessary.
12. Once combustion is set, tighten the air adjustment locking screw.
13. Start and stop the burner several times to ensure satisfactory operation. Test the primary control and all other appliance safety controls to verify that they function according.

Note: Combustion analyzers often do not show a selection for biodiesel or other biofuels causing confusion as to what setting to choose. Analyzers measure O2 and CO and then calculate the other readings based on the fuel selected.

NOTICE What to do: Set combustion analyzer to light oil or #2 setting when working with any blend of biodiesel. The CO2 reading will be off approximately 1/3 of 1% at B100 and proportionally less at lower blends (less than 1/10% at B20.) The AHR standard for combustion analyzers is plus/minus 3/10%. You can use the O2 reading to setup if you prefer. 4.5-5.7% O2 is equivalent to 11.3-12.3% CO2 and 25-35% excess air.

For extensive air purge situations, the control can be toggled into a 4 minute Pump Prime mode.

NOTICE

- Initiate a call for heat.- After the burner starts, press and hold the ACTION button until the "SYS" light turns yellow (hold approximately 15 seconds). Release the ACTION button. The "SYS" yellow light will turn off and the burner will start again.
- During the startup, tap the ACTION button while the igniter is still on. This will transition the control to a dedicated Pump Prime mode during which the motor, igniter and valve are powered for 4 minutes.
- The SYS light will be solid yellow for the duration of Pump Prime mode. At the end of 4 minutes, the SYS light will change from yellow to green and the control will return to standby mode.

WARNING **Annual Professional Service Required**

Tampering with or making incorrect adjustments could lead to equipment malfunction and result in asphyxiation, explosion or fire.

- DO NOT TAMPER WITH THE UNIT OR CONTROLS-CALL YOUR SERVICE PERSONNEL.
- To ensure continued reliable operation, a qualified service technician must service this burner annually.
- More frequent service intervals may be required in dusty or adverse environments.
- Operation and adjustment of the burner requires technical training and skillful use of combustion test instruments and other test equipment.

○ Perform Regular Maintenance

- ☐ Replace the oil supply line filter. The line filter cartridge must be replaced to avoid contamination of the fuel unit and nozzle.
- ☐ Inspect the oil supply system. All fittings should be leak-tight. The supply lines should be free of water, sludge and other restrictions.
- ☐ Remove and clean the pump strainer, replace if necessary. Replace the pump strainer cover gasket or O-ring.
- ☐ Verify the nozzle is the one originally specified by the appliance manufacturer and replace the nozzle with one having the exact specifications from the same manufacturer.
- ☐ Clean and inspect the electrodes for damage, replacing any that are cracked or chipped.
- ☐ Check electrode tip settings. Replace electrodes if tips are rounded.
- ☐ Inspect the igniter contacts. Clean or replace if corroded.
- ☐ Clean the cad cell lens surface, if necessary.
- ☐ Inspect all gaskets. Replace any that are damaged or would fail to seal adequately.
- ☐ Inspect the combustion head and air tube. Remove any carbon or foreign matter. Replace all damaged units with exact parts.
- ☐ Clean the blower wheel, air inlet, air guide, burner housing and static plate of any lint or foreign material.
- ☐ Check motor current. The amp draw should not exceed the nameplate rating.
- ☐ Check all wiring for secure connections or insulation breaks.
- ☐ Check the pump pressure and cutoff function.
- ☐ Check primary control safety lockout timing.
- ☐ Check ignition system for proper operation.
- ☐ Inspect the vent system and chimney for soot accumulation or other restriction.
- ☐ Clean all flue passages and flue pipe. Replace corroded or damaged pipes.
- ☐ Clean the appliance thoroughly according to the manufacturer's recommendations.
- ☐ Check the burner performance. Refer to the section "Set combustion with instruments".
- ☐ Record the service performed and combustion test results. Use the myTechnician® app to record and store all this information. The app provides a wireless Bluetooth connection to a Beckett® burner with the GeniSys® 7565 120V Oil Burner Advanced Primary Control. The app allows you to monitor the current status, control timings, burner cycle history and program the control variables directly from your phone. With its advanced troubleshooting feature, it provides guidance for diagnostics and troubleshooting information related to the end causes.

The myTechnician® app is available for both iOS and Android operating systems (see page 22).

Shutting the Burner Off

Turn off all electric power to the burner.
Note: There could be more than one disconnect switch.

CAUTION **Always keep the fuel oil supply valve shut-off if the burner(s) is shut down for an extended period of time.**

Replacement Parts

For best performance specify genuine Beckett® replacement parts

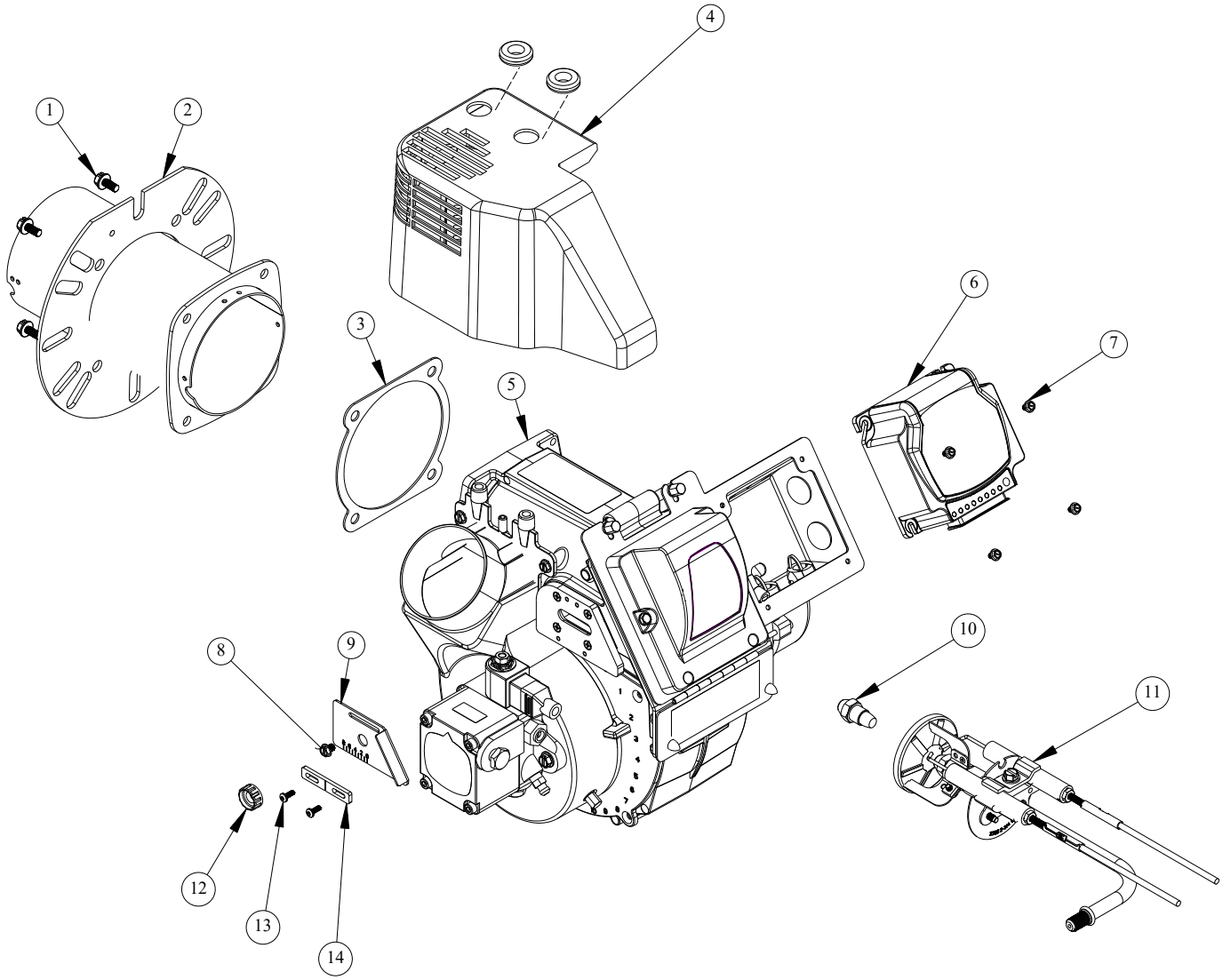

ITEM	PART NUMBER	DESCRIPTION
1	4439U	SCREW 1/4-20 X 1/2" HEX HEAD (12 PACK)
2	VARIOUS	AIR TUBE SUBASSEMBLY
3	3380U	FLANGE GASKET
4	33237U	INTAKE COVER WITH GROMMETS
5	52663-002U	CHASSIS SUBASSEMBLY (WITH AIR GUIDE KIT)
6	7565U	CONTROL 120V
7	4605-001U	#8-32 X 1/4" HEX HEAD SCREW (24 PACK)
8	4586-002U	#6-32 X 1/4" HEX HEAD SCREW (24 PACK)
9	33223U	ESCUTCHEON PLATE
10	VARIOUS	NOZZLE
11A	52671-001U	NOZZLE LINE ELECTRODE ASSEMBLY 5" SERIES
11B	52671-002U	NOZZLE LINE ELECTRODE ASSEMBLY 7" SERIES
11C	52671-003U	NOZZLE LINE ELECTRODE ASSEMBLY 9" SERIES
12	3666U	SPLINE NUT
13	4606-001U	SCREW #6-32 TORX BUTTON HEAD (12 PACK)
14	33224U	ESCUTCHEON GUIDE BAR

Replacement Parts

For best performance specify genuine Beckett® replacement parts

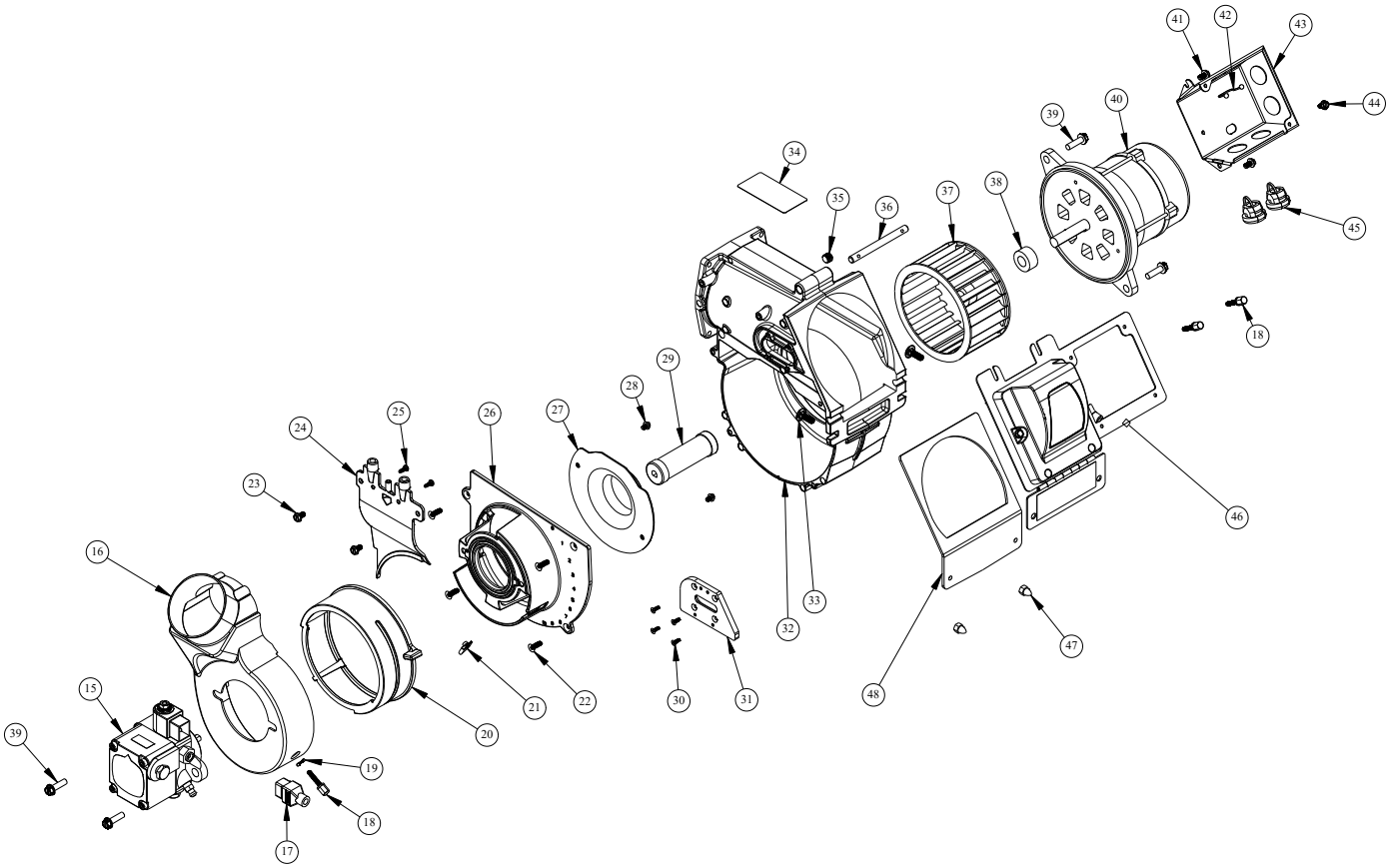

ITEM	PART NUMBER	DESCRIPTION
15A	PF20321U (UNIVERSAL)	B100 CLEANCUT PUMP SINGLE STAGE 120V
15B	PF20322U (SUNTEC)	B100 CLEANCUT PUMP SINGLE STAGE 120V
15C	PF20323U (DANFOSS)	B100 CLEANCUT PUMP SINGLE STAGE 120V
16	33230U	AIR INLET BODY
17	21808U	PUMP CORDSET, NON-DELAY
18	4595-001U	THUMBSCREW (3 PACK)
19	4601-001U	WAVE SPRING (10 PACK)
20	33218U	AIR BAND
21	4596U	BARREL NUT (25 PACK)
22	4603-001U	#10-24 X 1/2" SCREW FLAT HEAD TORX (24 PACK)
23	4466U	#10-24 X 3/8" HEX HEAD SCREW (24 PACK)
24	33231U	AIR BOOT BACK COVER
25	4602-001U	#6-32 X 3/8" SCREW (12 PACK)
26	33210GYU	HOUSING PUMP HALF PAINTED
27A	33232-001U	RED AIR GUIDE (LOW RATE/LOW AIR)
27B	33232-002U	WHITE AIR GUIDE (UNIVERSAL)
27C	33232-003U	BLUE AIR GUIDE (HIGH RATE/HIGH AIR)
28	4605-001	#8-32 X 1/4" HEX HEAD SCREW (24 PACK)
29	2801U	PUMP COUPLING 3-5/8"

ITEM	PART NUMBER	DESCRIPTION
30	4604-001U	FLAT HEAD SCREW (24 PACK)
31	33222U	OIL LINE SLOT COVER
32	33209GYU	HOUSING MOTOR HALF PAINTED
33	4607-001U	1/4-20 X 3/4" CARRIAGE BOLT (10 PACK)
34	65003U	WARNING LABEL (10 PACK)
35	2W10423U	1/8" NPT PLUG SOCKET DRIVE (12 PACK)
36	33235U	PIVOT, LOCK KNOB
37	21837U	BLOWER WHEEL 4-3/4" X 2-7/16"
38	33240U	SPACER
39	4189U	SCREW 1/4-20 X 7/8" HEX HEAD (12 PACK)
40	21805U	1/7 HP MOTOR, 120V/60HZ 3450 RPM
41	4466U	#10-24 X 3/8" HEX HEAD SCREW (24 PACK)
42	4584-001U	CABLE TIE (24 PACK)
43	3741U	ELECTRICAL BOX, 4"X4"
44	4231U	#10-32 X 3/8" GROUND SCREW (GREEN)
45	21885U	STRAIN RELIEF (24 PACK)
46	52662U	IGNITER SUBASSEMBLY (LESS CONTROL)
47	4340U	1/4-20 ACORN NUT (12 PACK)
48	33245U	GASKET, UL94V-0 (12 PACK)

Replacement Parts

For best performance specify genuine Beckett® replacement parts

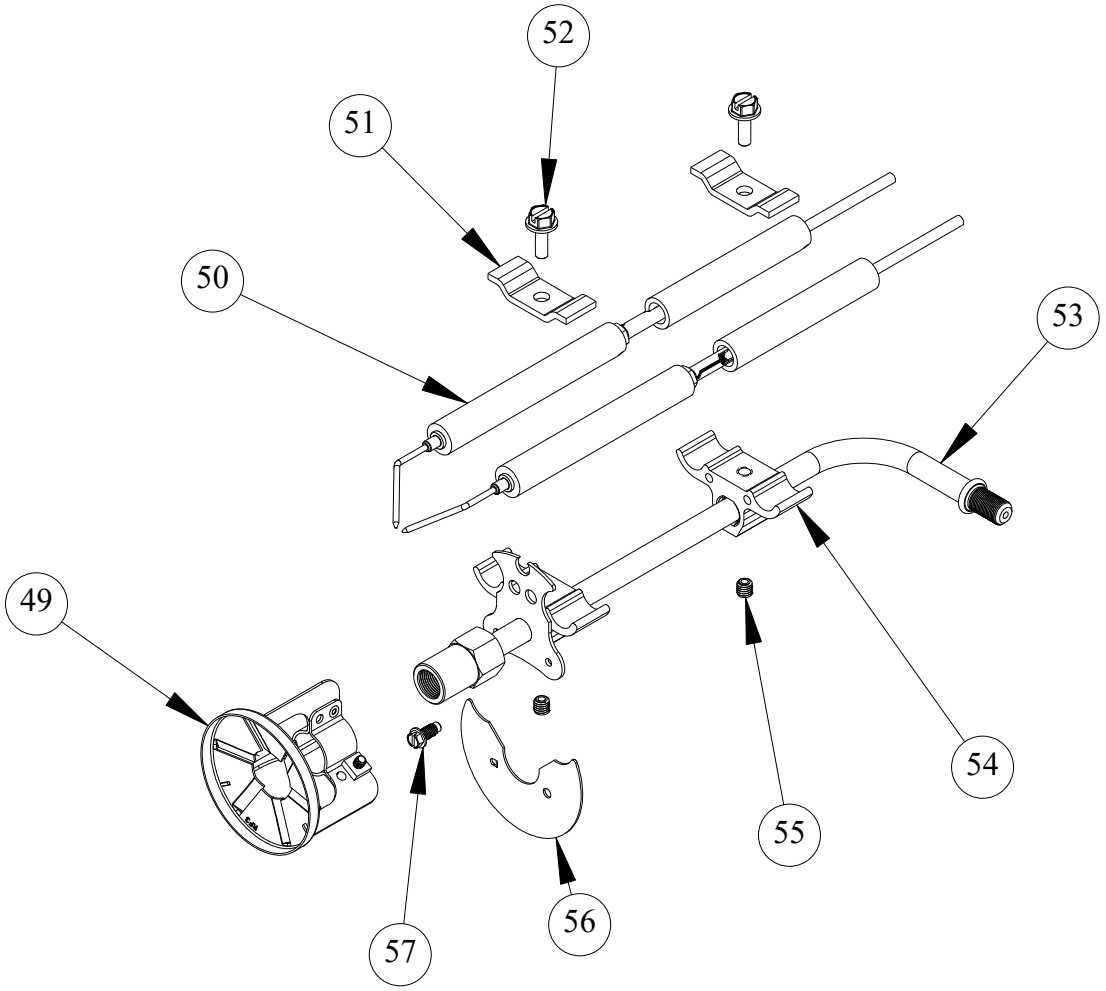

ITEM	PART NUMBER	DESCRIPTION
49A	52677U	RF3 HEAD ASSEMBLY (6-SLOT)
49B	52678U	RF4 HEAD ASSEMBLY (9-SLOT)
50A	EA24306TU	ELECTRODE ASSEMBLY, 5"-6" AIR TUBES (2 PACK)
50B	EA29406TU	ELECTRODE ASSEMBLY, 7"-8" AIR TUBES (2 PACK)
50C	EA34807TU	ELECTRODE ASSEMBLY, 9"-10" AIR TUBES (2 PACK)
51	149U	ELECTRODE CLAMP (2 PACK)
52	4219U	1/4-20 X 5/8" HEX HEAD SCREW (12 PACK)
53A	52670-001U	NOZZLE LINE SUBASSEMBLY KIT (5"-6" AIR TUBES)
53B	52670-002U	NOZZLE LINE SUBASSEMBLY KIT (7"-8" AIR TUBES)
53C	52670-003U	NOZZLE LINE SUBASSEMBLY KIT (9"-10" AIR TUBES)
54	INCLUDED IN 52670 KIT (AS REQ'D)	ELECTRODE SPACER
55	INCLUDED IN 52670 KIT (AS REQ'D)	1/4-20 X 1/4" SET SCREW
56	INCLUDED IN 52670 KIT (AS REQ'D)	STATIC PLATE, 2-3/4"
57	INCLUDED IN 52670 KIT (AS REQ'D)	#8-18 X 7/16" HEX HEAD SCREW

Replacement Parts

For best performance specify genuine Beckett® replacement parts

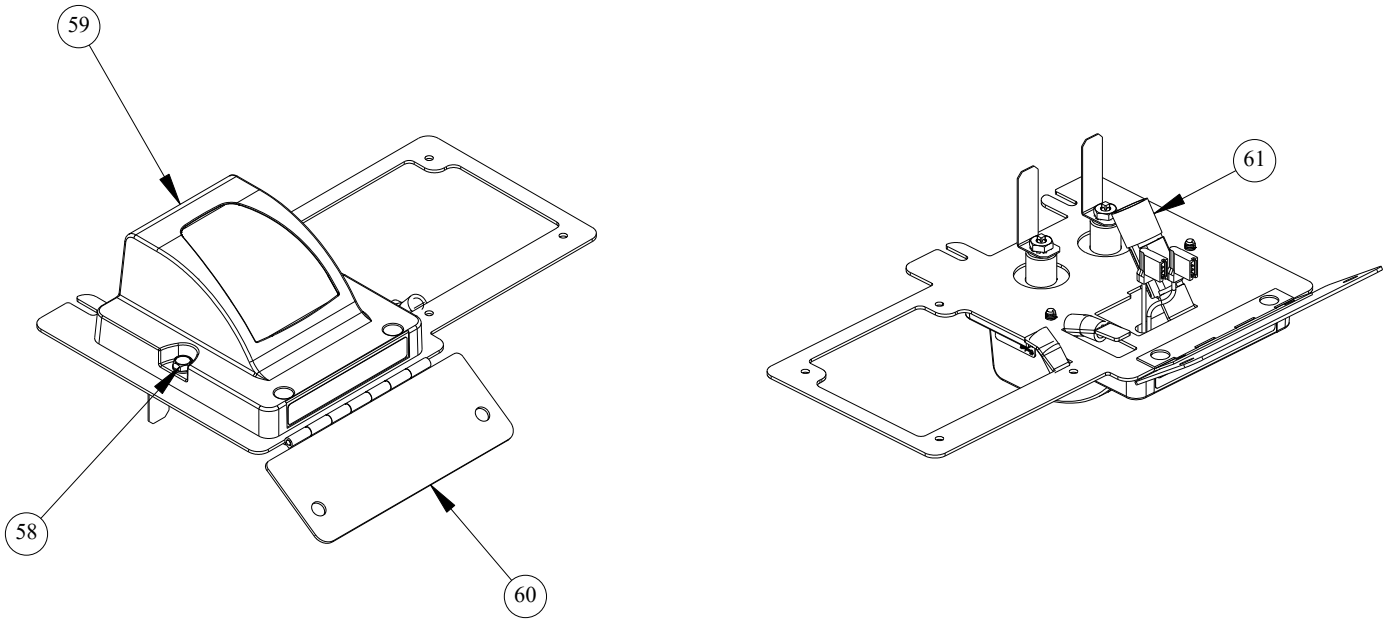

ITEM	PART NUMBER	DESCRIPTION
58	4454U	#10-16 X 1/2" HEX HEAD SCREW (24 PACK)
59	52437-003U	120V IGNITER W/BRASS TERMINALS & GASKET
60	52672BKU	IGNITER CONTROL PLATE, BLACK W/LABEL
61	5963008U	RF DETECTOR ASSEMBLY

Accessories

For best performance specify genuine *Beckett*® replacement parts

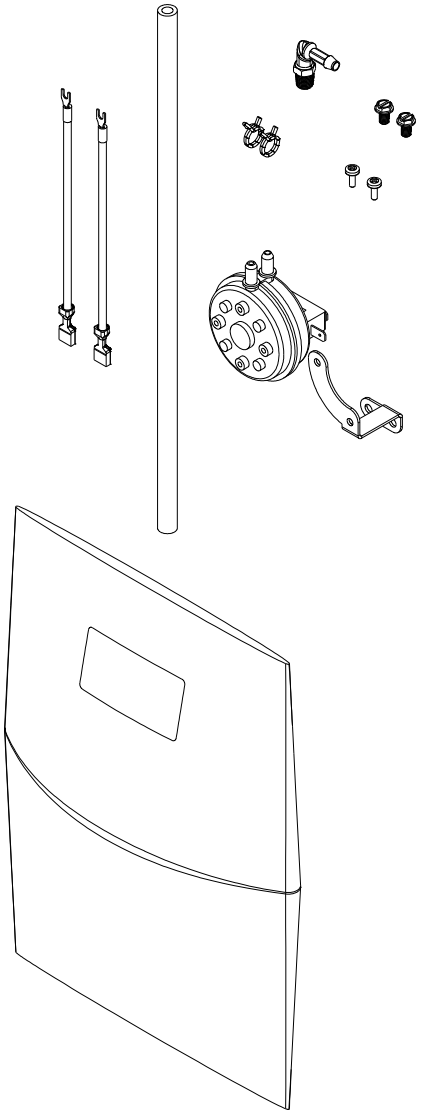

AIR PROVING SWITCH KITS
52683U: 0.50” water column (standard)
52683-002U: 0.25” water column (optional for high rate)

Includes:
Wires
Hose
Switch
Mounting Bracket
Elbow Clamps
Mounting Screws

ADJUSTABLE FLANGE WITH 2 DEGREE PITCH 51634U

Includes:
Flange
Clamp
Hardware
Universal Gasket

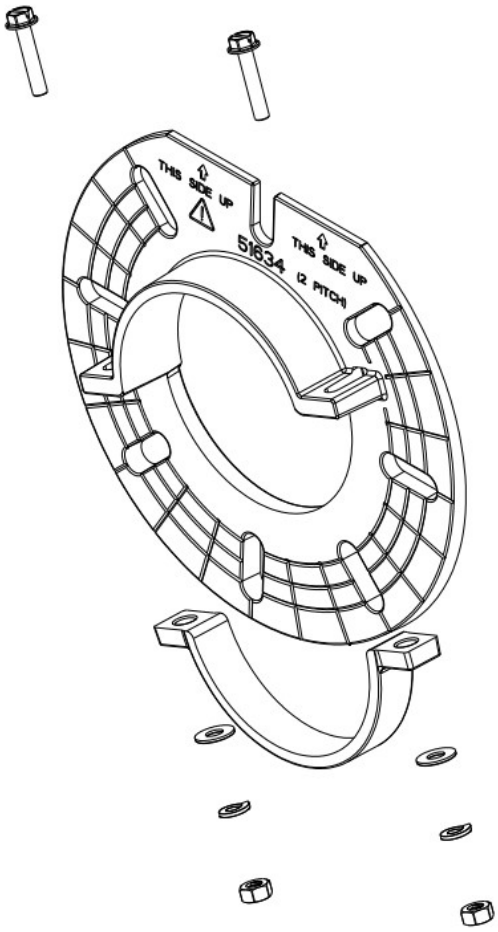

Accessories

For best performance specify genuine Beckett® replacement parts

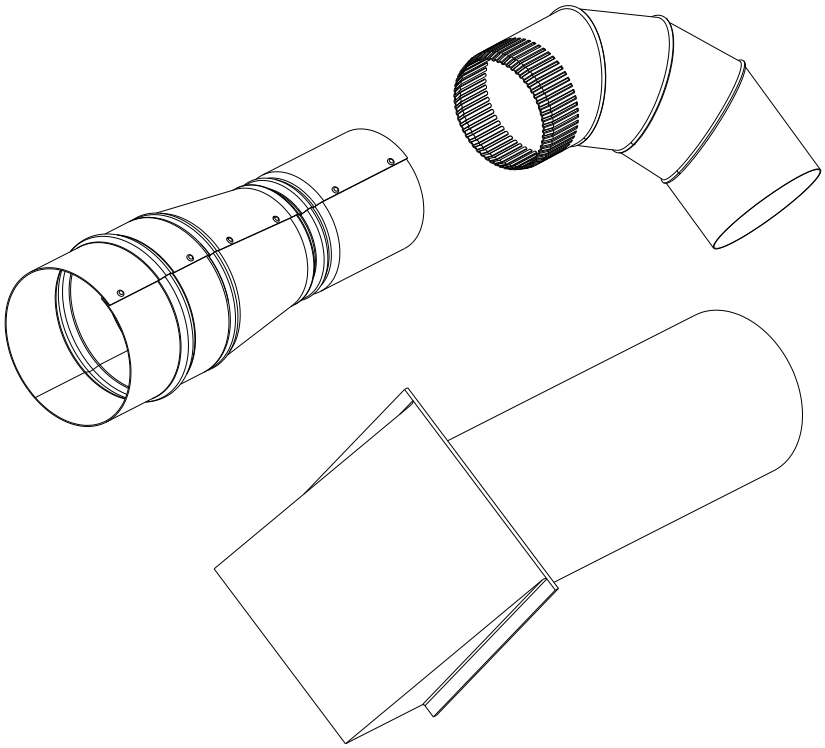

Outside Air Adapter Kit for RF Burner
52682U

Includes:
3” Galvanized Adjustable Elbow
4” x 3” Galvanized Reducer
4” Fresh Air Intake Hood

Green Gauge Kit - For Improved Electrode Tip Positioning on the RF Burner

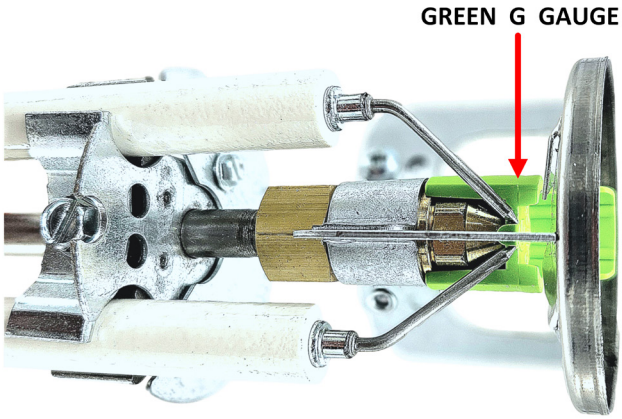

T501 MULTIPURPOSE GAUGE - For RF, NX, AF, AFG, AFII, SR, SM, and SF Burners

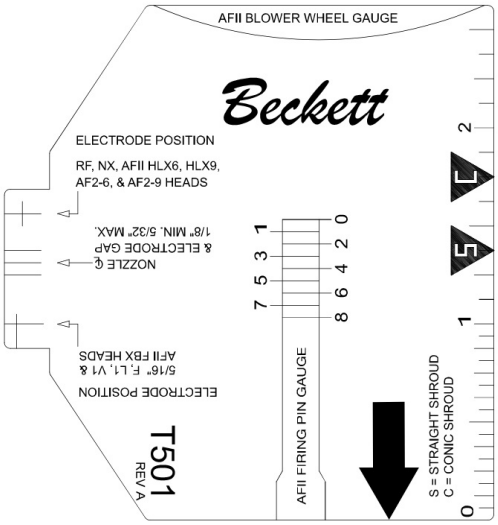

RF Burner's Motor, Blower Wheel and Spacer

To ensure the correct positioning of the blower wheel when replacing either the motor or the blower wheel, a spacer (33240U) is required and has to be mounted to the motor shaft.

ITEM	PART NUMBER	DESCRIPTION
37	21837U	BLOWER WHEEL 4-3/4" X 2-7/16"
38	33240U	SPACER 1" X 1/2" X 1/2"
39	4189U	SCREW 1/4-20 X 7/8" HEX HEAD (12 PACK)
40	21805U	1/7 HP MOTOR, 120V/60HZ 3450 RPM

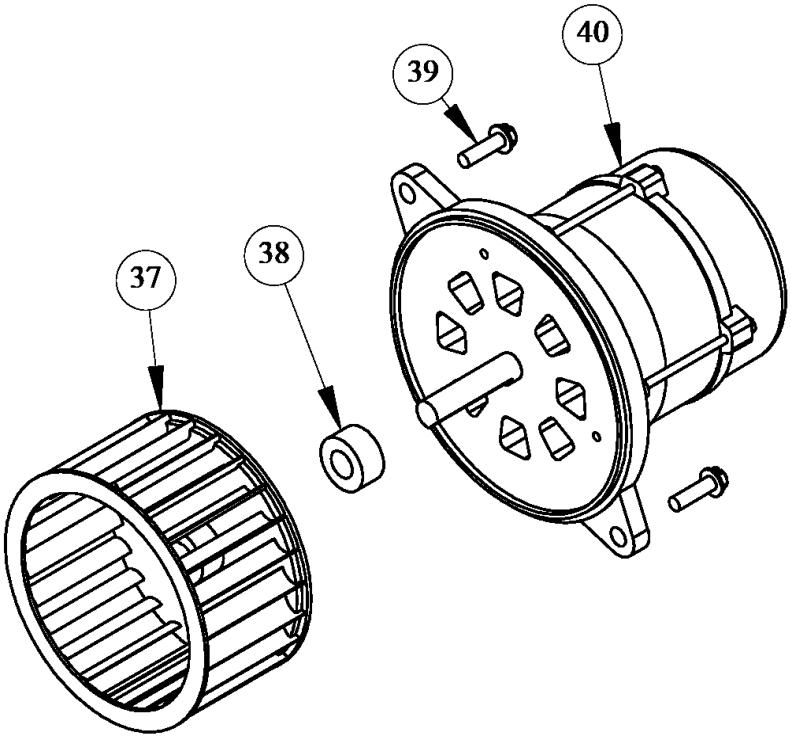

myTechnician™ Mobile Application

The myTechnician™ Mobile Application is an essential tool for professional oil heat technicians, helping identify problems, reduce job time, and eliminate call backs. It connects via Bluetooth to Beckett® burners with the advanced GeniSys® 7565 120V Oil Burner Control, allowing technicians to program settings, view history, diagnose faults, and evaluate trends quickly. The myTechnician™ app is available on both iOS and Android.

Apple Store

my Technician™ POWERED BY BECKETT

Google Play

Burner Start – Up Report

Installation Information

Burner Model: _____ Serial #: _____

Appliance Mfg: _____ Appliance Model: _____

Installation Date: _____ Set-up Date: _____

Company: _____

Address: _____

Phone: _____

Owner Name: _____

Installation Address: _____

Burner Set-Up Information

Head: _____ Setting: _____

Nozzle Installed: _____

Pump Pressure: _____

Air Dial Setting: _____

Draft overfire: _____ Draft breech: _____

Smoke #: _____ CO2: _____ O2: _____ CO: _____

Fuel: _____ Tank Location - Indoor _____ Outdoor _____

Fuel system: One pipe ____ Two pipe ____ Deaerator: Yes ____ No ____

Fuel filter(s): _____

Limited Warranty Information

The R. W. BECKETT CORPORATION ("Beckett") warrants to persons who purchase its "Products" from Beckett for resale, or for incorporation into a product for resale ("Customers"), that its equipment is free from defects in material and workmanship. To qualify for warranty benefits, products must be installed by a qualified service agency in full compliance with all codes and authorities having jurisdiction, and used within the tolerances of Beckett's defined product specifications.

To review the complete warranty policy and duration of coverage for a specific product, or obtain a written copy of the warranty, please choose one of the following options:

1. Visit our website at: www.beckettcorp.com/support/warranty
2. Email your request to: rwb-customer-service@beckettcorp.com
3. Write to: R. W. Beckett Corporation, P. O. Box 1289, Elyria, OH 44036

NOTE: Beckett is not responsible for any labor cost for removal and replacement of equipment. THIS WARRANTY IS LIMITED TO THE PRECISE TERMS SET FORTH ABOVE, AND PROVIDES EXCLUSIVE REMEDIES EXPRESSLY IN LIEU OF ALL OTHER REMEDIES, AND IN PARTICULAR THERE SHALL BE EXCLUDED THE IMPLIED WARRANTIES OF MERCHANTABILITY AND FITNESS FOR A PARTICULAR PURPOSE. IN NO EVENT WILL BECKETT BE LIABLE FOR ANY INCIDENTAL OR CONSEQUENTIAL DAMAGE OF ANY NATURE. Beckett neither assumes, nor authorizes any person to assume for Beckett, any other liability or obligation in connection with the sale of this equipment. Beckett's liability and Customer's exclusive remedy is limited to the cost of the product.

USA: **R.W. Beckett Corporation,** 1-800-645-2876
Canada: **R.W. Beckett Canada Ltd,** 1-800-665-6972
www.beckettcorp.com

Printed in the USA 08/24 Form No. 6104BRF R01

Beckett®