INSTALLATION AND OPERATING INSTRUCTIONS

IBC INTERGAS®

# SFC-99, SFC-125

## COMBI BOILERS

*(Natural Gas or Propane)*

**WARNING: If the information in this manual is not followed exactly, a fire or explosion may result causing property damage, personal injury, or loss of life.**

**Do not store or use gasoline or other flammable vapours and liquids or other combustible materials in the vicinity of this or any other appliance.**

**WHAT TO DO IF YOU SMELL GAS:**

- **Do not try to light any appliance.**
- **Do not touch any electrical switch; do not use any phone in your building.**
- **Immediately call your gas supplier from a nearby phone. Follow the gas supplier's instructions.**
- **If you cannot reach your gas supplier, call the fire department.**

**Installation and service must be performed by a qualified installer, service agency or the gas supplier.**

Le manuel est également disponible en français. Visitez le portail << Technical Information Portal >> à notre site web www.ibcboiler.com.

C US

ENERGY STAR

C US NSF/ANSI 372 Low Lead Content

AHRI CERTIFIED™

**www.ibcboiler.com**

**⚠ WARNING**

**If the information in this manual is not followed exactly, a fire or explosion may result causing property damage, personal injury, or loss of life.**

# SAFETY CONSIDERATIONS

**Installation, start-up and servicing of IBC units must be done with due care and attention, and should only be performed by competent, qualified, licensed and trained heating technicians. Failure to read and comply with all instructions and applicable National and local codes may result in hazardous conditions that could result in property damage and injury to occupants which in extreme cases might result in death.**

# HAZARDS & PRECAUTIONS

**⚠ DANGER**

**Points out an immediately hazardous situation which must be avoided in order to prevent serious injury or death.**

**⚠ WARNING**

**Points out a potentially hazardous situation which must be avoided to prevent serious injury or death.**

**⚠ CAUTION**

**Points out a potentially hazardous situation which must be avoided to prevent possible moderate injury and/ or property damage**

**⚠ NOTE**

**Points out installation, maintenance and operation details that will result in enhanced efficiency, longevity and proper operation of your unit.**

**⚠ BEST PRACTICES**

**Points out recommendations for better installation.**

**Supplied with the unit** - The SFC unit is shipped with an accessory parts kit consisting of the following items:

- 1 x Wall Mounting Bracket, 4 x 1.75 “ bolts - IBC part P-837
- 1 x Condensate Trap Assembly
- 1 x Pressure Relief valve, ¾ NPT, 30psi
- 1 x Outdoor Temperature Sensor, IBC part P-732
- 1 x SFC Installation & Operating Instructions
- 1 x SFC/SFB Controller Manual
- 1 x Propane Conversion Kit: P-804 (SFC-99) or P-806 (SFC-125)

# SPECIFICATIONS

| SPECIFICATION | SFC 99 | SFC 125 |
|---|---|---|
| CSA Input (Natural Gas or Propane) – MBH | 15.5 - 99 | 16.5 - 99 |
| CSA Input (Natural Gas or Propane) – KW | 4.5 - 29.0 | 4.84 - 29.9 |
| CSA Output – MBH | 13.6 - 89.5 | 14.8 - 92.1 |
| CSA Output - KW | 4.0 - 26.1 | 4.35 - 27 |
| DHW - CSA Input (Natural Gas or Propane) - MBH | 15.5 - 99 | 16.5 - 125 |
| DHW - CSA Input (Natural Gas or Propane) - KW | 4.5 - 29.0 | 4.84 - 36.63 |
| A.F.U.E | 96% | 95% |
| Min Gas Pressure (Nat. Gas or Propane) – inch w.c. | 5 | |
| Max Gas Pressure (Nat. Gas or Propane) – inch w.c. | 14 | |
| Power (120Vac/60Hz) - Watts @ full fire with internal pump | 115 | |
| Weight (empty) – lbs/Kg | 85 / 39 | |
| Pressure Vessel water content – USG/Liters | 0.5 / 1.9 | |
| Max boiler flow rate - USgpm | 11 | |
| Min boiler flow rate - USgpm | 2 | |
| Max Operating Pressure – Space Heating Coil - psig † | 43.5 | |
| Max Operating Pressure – Domestic Hot Water Coil - psig | 150 | |
| Minimum water pressure - psig | 8 | |
| Approved installation altitude - ASL | 10,000 ft | |
| Ambient Temperature – Low (°F/°C) | 32 / 0 | |
| Ambient Temperature – High (°F/°C) | 122 / 50 | |
| Max relative humidity (non-condensing) | 90% | |
| Min water Temperature - Space Heating (°F/°C) | 50 / 10 | |
| Max water Temperature – Space Heating (°F/°C) | 194 / 90 | |
| Min water Temperature – Domestic Hot Water (°F/°C) | 104 / 40 | |
| Max water Temperature – Domestic Hot Water (°F/°C) | 149 / 65 | |
| Min flow rate to activate DHW heating - USgpm | 0.5 | |
| Max flow rate DHW heating - USgpm | 4.0 | |
| Max equivalent vent length 3" (each side) | 120' | |
| Max equivalent vent length 2" (each side) | 35' | |

* Natural Gas units require a Propane conversion kit included with unit (see page #3-2, Table 11). Propane (LP) units require a Natural Gas conversion kit (see page #3-2, Table 11) to be ordered separately if converting a Propane unit to Natural Gas.

† units are shipped with 30 psig pressure relief valve

## DANGER

- Water temperature over 125°F (52°C) can cause severe burns instantly or death from scalds.
- Children, disabled, and elderly are at highest risk of being scalded.
- See instruction manual before setting temperature at water heater.
- Feel water before bathing or showering.
- Temperature limiting valves are available, see manual.

## WATER HEATER INSTALLATION GUIDELINES

### WARNING

- This unit must be installed in accordance with local codes, if any; if not follow the National Fuel Gas Code, ANSI Z223.1/NFPA 54, or the Natural Gas and Propane Installation Code, CAN/CSA B149.1, as applicable.
- Failure to correctly install and operate this appliance can result in severe personal injury or death.
- The unit shall have a pressure relief valve installed within 6" [152mm] of the DHW HOT outlet connection.
  Refer to the unit's User Manual before operating the relief valve.
- The unit requires a pressure relief valve identified with the ASME V or HV symbol and set to relieve at or below 150psi of domestic water pressure and a minimum relieving capacity of 199,000 Btu/hr with 3/4" NPT threads. For safe operation of the unit, the relief valve must not be removed from its designated point of installation or plugged.
- Read and follow warnings and instructions.

### CAUTION

- Hotter water increases the risk of scald injury. Before changing the temperature setting, see instruction manual.

### ADJUSTABLE TEMPERATURE SETTING

- Touch the panel above the dot twice, then touch the Faucet . Adjust the water temperature with the Plus + and Minus – then touch the Return button to save the changes.

# CONTENTS

**1.0 INSTALLATION . . . . . 1-1**
1.1 GENERAL . . . . . 1-1
1.2 CODE REQUIREMENTS . . . . . 1-3
1.3 LOCATION . . . . . 1-3
1.3.1 Mobile Home Installations . . . . . 1-4
1.4 EXHAUST VENTING AND AIR INTAKE . . . . . 1-5
1.4.1 Applications . . . . . 1-6
1.4.2 Exhaust Vent Material . . . . . 1-6
1.4.3 Vent Travel . . . . . 1-7
1.4.4 Venting Passage Through Ceiling and Floor . . . . . 1-9
1.4.5 Rooftop Vent Termination . . . . . 1-9
1.4.6 Sidewall Vent Termination . . . . . 1-11
1.4.7 “Direct Vent” Combustion Air Intake Piping . . . . . 1-15
1.4.8 “Indoor Air” 1.4.8 “Indoor Air” Combustion Air Intake . . . . . 1-16
1.4.9 Closet Installations . . . . . 1-16
1.5 CONDENSATE REMOVAL . . . . . 1-17
1.5.1 Condensate Trap . . . . . 1-17
1.5.2 Installing the Condensate Trap . . . . . 1-17
1.5.3 Cleaning the Condensate Trap . . . . . 1-18
1.5.4 Further Installation Details . . . . . 1-18
1.6 Water Piping - SPACE HEATING . . . . . 1-20
1.6.1 General Piping Considerations . . . . . 1-20
1.6.2 Basic Heating Piping Arrangements . . . . . 1-24
1.7 Domestic Hot Water System . . . . . 1-29
1.7.1 Domestic Hot Water System . . . . . 1-30
1.7.2 Domestic Hot Water Piping . . . . . 1-30
1.8 Gas Piping . . . . . 1-33
Removing the cover . . . . . 1-34
1.9 Electrical Connections . . . . . 1-34
1.9.1 120VAC Line Voltage Hook-up . . . . . 1-34
1.9.2 Power Quality and Electrical Protection . . . . . 1-36
1.9.3 Zone Valve and Zone Pump Connections . . . . . 1-36
1.9.4 Thermostat / Sensor Wiring . . . . . 1-37
**2.0 UNIT SYSTEM OPERATION . . . . . 2-1**
2.1 GENERAL . . . . . 2-1
2.2 CONTROL . . . . . 2-2
2.3 INSTALLER INTERFACE . . . . . 2-2
2.3.1 Turning Appliance ON/OFF . . . . . 2-2
2.4 Tankless Domestic Hot Water Modes . . . . . 2-5
2.4.1 Tankless Domestic Hot Water - Standard and ECO Comfort Modes . . . . . 2-5
2.5 Adding Domestic Hot Water Storage . . . . . 2-6
2.5.1 Tankless Domestic Hot Water with a Storage Tank . . . . . 2-6
2.5.2 Domestic Hot Water with an Indirect Tank Heater . . . . . 2-6

2.6 SPACE HEATING . . . . . 2-6
2.6.1 Overview . . . . . 2-6
2.7 SEQUENCE OF OPERATION . . . . . 2-7
**3.0 STARTUP & COMMISSIONING . . . . . 3-1**
3.1 LIGHTING & SHUTTING DOWN THE UNIT . . . . . 3-1
3.2 PRIOR TO START-UP . . . . . 3-2
3.2.1 Pre-Ignition Checks . . . . . 3-2
3.2.2 Test Ignition Safety Shutoff . . . . . 3-2
3.3 COMMISSIONING . . . . . 3-2
3.4 FUEL CONVERSION . . . . . 3-4
3.4.1 Gaining access to combustion chamber, burner removal instructions . . . . . 3-5
**4.0 MAINTENANCE. . . . . 4-1**
4.1 UNIT MAINTENANCE . . . . . 4-1
4.1.1 General Care . . . . . 4-1
4.1.2 Inspection . . . . . 4-1
4.1.3 Venting . . . . . 4-1
4.1.4 Condensate Trap . . . . . 4-1
4.1.5 Burner . . . . . 4-1
4.1.6 Heat Exchanger . . . . . 4-2
4.1.7 Pump . . . . . 4-2
4.1.8 Gas Piping . . . . . 4-2
4.1.9 Control Module . . . . . 4-2
4.1.10 Water Heating System . . . . . 4-2
4.1.11 Freeze Protection . . . . . 4-2
4.1.12 System Treatment . . . . . 4-3
4.1.13 Relief Valve - Maintenance and Testing . . . . . 4-3
4.1.14 Domestic Hot Water System . . . . . 4-3
4.1.15 Fan and gas valve removal instructions . . . . . 4-4
4.1.16 Fan and gas valve re-assembly instructions . . . . . 4-4
**5.0 TROUBLESHOOTING . . . . . 5-1**
5.1 Preliminary Checks . . . . . 5-1
5.2 Electronic Components . . . . . 5-2
5.2.1 Temperature Sensors . . . . . 5-2
5.2.2 Fan/Blower . . . . . 5-3
5.2.3 Thermostat Connections . . . . . 5-3
5.2.4 Water Pressure Sensor-Type Low Water Cut Off (LWCO) . . . . . 5-3
5.2.5 Flue Gas Temperature Sensor . . . . . 5-4
5.2.6 Domestic Hot Water Flow Sensor . . . . . 5-4
5.2.7 Domestic Hot Water Sensor . . . . . 5-4
5.2.8 Outdoor Sensor . . . . . 5-4
5.2.9 DHW Tank Sensor . . . . . 5-5

5.3 WARNINGS AND FAULTS . . . . . 5-6
5.3.1 Warning Codes. . . . . 5-6
5.4 OTHER FAULTS . . . . . 5-8
5.4.1 No heat (central heating) fault codes . . . . . 5-8
5.4.2 Central heating does not reach the correct temperature . . . . . 5-8
5.4.3 Central heating system remains too warm . . . . . 5-9
5.4.4 No domestic hot water (DHW) . . . . . 5-9
5.4.5 Domestic hot tap water does not reach the correct temperature . . . . . 5-9
5.4.6 Burner ignites loudly. . . . . 5-10
5.4.7 Burner resonates . . . . . 5-10
**6.0 DIAGRAMS . . . . . 6-1**
6.1 PARTS DIAGRAMS . . . . . 6-2
6.2 WIRING DIAGRAMS . . . . . 6-5
INSTALLATION & COMMISSIONING REPORT. . . . . 6-6
SERVICE RECORD . . . . . 6-7
REVISION HISTORY . . . . . 6-9

**⚠ DANGER**

**Should overheating occur or the gas supply fails to shut off, do not turn off or disconnect the electrical supply to the pump. Instead shut off the gas supply at a location external to the appliance.**

**⚠ WARNING**

**Do not use this unit if any part has been under water. Immediately call a qualified service technician to inspect the unit and to replace any part of the control system and any gas control that has been under water.**

**⚠ CAUTION**

**Care must be taken to properly size the unit for its intended use. Prolonged full fire run time, over-sizing or under-sizing, and incorrect flow rates through the unit can lead to increased maintenance costs, equipment stress and premature failure.**

# PRE-INSTALLATION CHECK

Carefully consider clearances and access, vent travel and termination, gas supply, condensate removal and combustion air supply.

Consider the following:

- Install the unit in areas where the combustion air source is not subject to chemical fouling or agricultural vapours. Exposure to corrosive chemical fumes such as chlorinated and/or fluorinated hydrocarbons can reduce the life of a unit. Cleaners, bleaches, air fresheners, refrigerants, aerosol propellants, dry-cleaning fluids, de-greasers and paint-removers all contain vapours that can form corrosive acid compounds when burned in a gas flame. Avoid airborne chlorides such as those released with the use of laundry detergents.
- Locate the unit where water leakage will not result in damage to the area (for example, do not install above carpeting). If you cannot find a suitable location, install a drain pan under the appliance.
- At a new construction site, or during renovations, protect the unit from drywall dust or other construction related contaminants (not a construction heater).
  - Ensure combustion air is drawn from a CLEAN source (outdoors).
  - Isolate the unit from interior dust sources.
- When the unit is in operation, assess the impact of the steam plume normally experienced at the exhaust terminal of a condensing unit. Generally, intake and exhaust pipes should terminate at a rooftop or sterile wall location. Unit condensate is corrosive. Protective measures must be taken to prevent corrosion damage to metal roofs or other metal building components in contact with the condensate. Keep exhaust plumes well away from all building air intakes including those of neighbouring properties.
- Place the exhaust outlet so it to reaches 12” minimum above the down-turned intake. Avoid exhaust re-ingestion.
- For sidewall venting options: Both the inlet and exhaust terminations should be located on the same side of the building. You can elevate both pipes in “periscope style” after passing them through the wall to gain required clearance above grade and snow level.
- Examine the condensate outlet to ensure proper disposal of condensate will occur during operation. If discharging condensates into building drain piping materials that are subject to corrosion, you must use a neutralization package.
- Ensure that the pressure relief valve is installed with no valves or other means of isolation between its inlet and the unit. Pipe the relief valve with unobstructed piping (minimum 3/4” diameter) to a safe discharge location.
- In locations where power supply quality varies or is unstable, consider installing surge protection and power conditioners (up to and including battery back-up uninterrupted power supply devices).
- Ensure the domestic hot water demands are considered before purchasing the SFC series unit. You may need to add a storage tank or an indirect tank.

**⚠ NOTE**

**When using the SFC units for non-domestic purposes the warranty conditions and maintenance periods described in this document are no longer valid. Please contact IBC for advice.**

# 1.0 INSTALLATION

## 1.1 GENERAL

SFC series gas-fired modulating units are low pressure, fully condensing units with variable input ranges *(see specification chart - page 3)* designed to be used for domestic (residential) purposes. Domestic use is considered to be an average annual gas usage of 4000 m3 for natural gas or ± 1500 m3 for propane. The units are approved as “Category IV” vented appliances using Direct Vent (sealed combustion).

Figures 1a and 1b show outer case dimensions and piping. Use this diagram to find a suitable location for the unit. *See also Section 1.3 Location.*

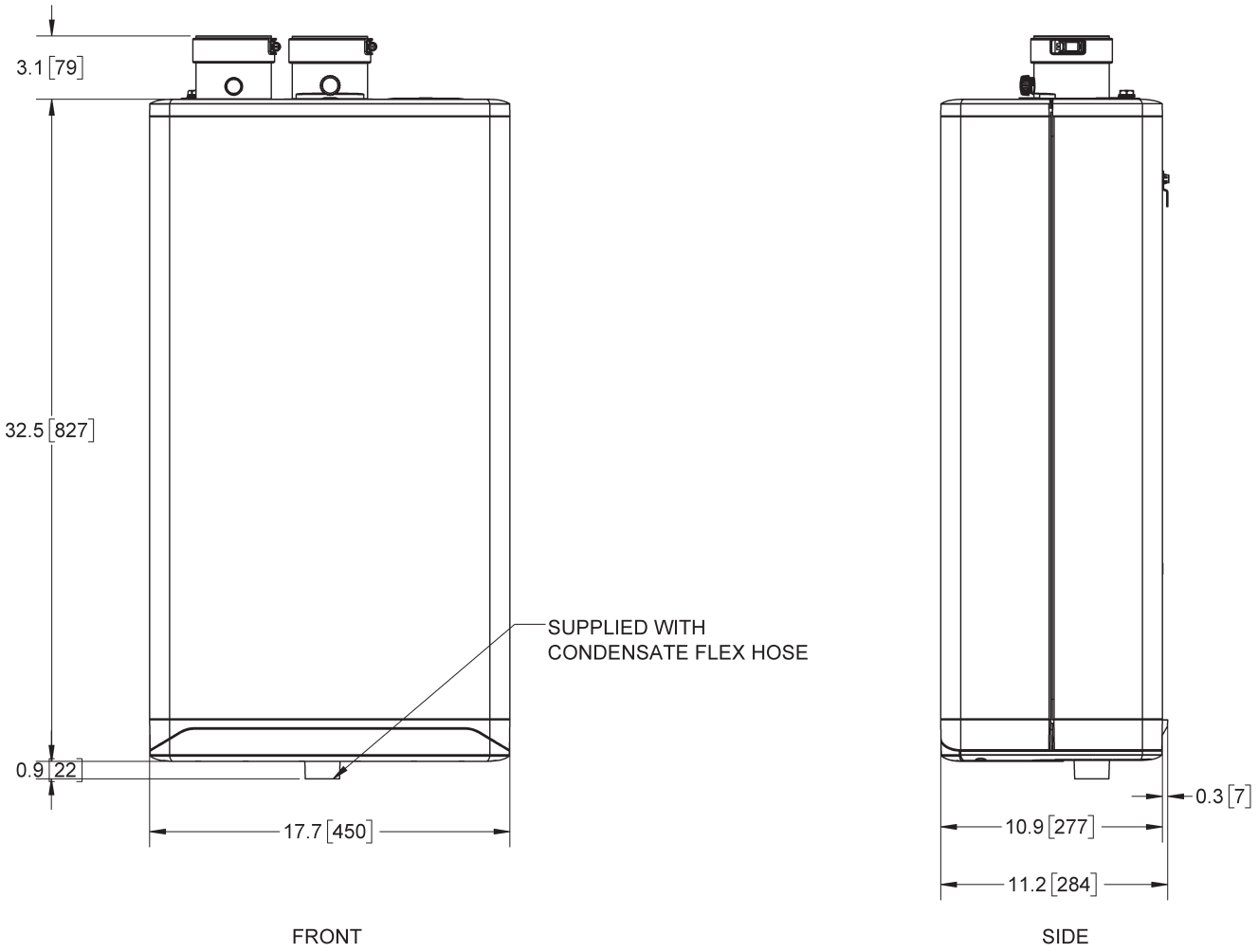


*Figure 1a: Dimensions / Connections for SFC Series*

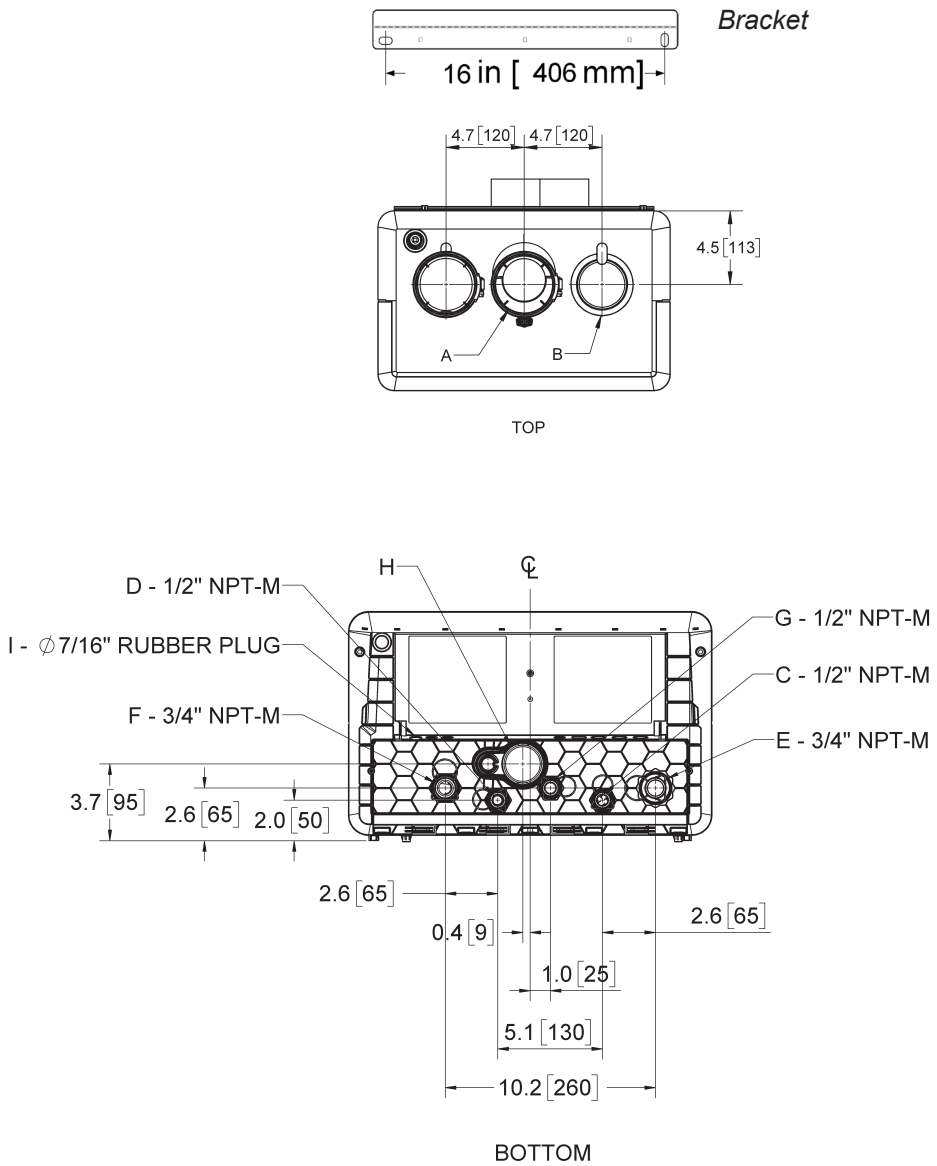


*Figure 1b: Dimensions / Connections for SFC Series*

| | DESCRIPTION | SFC SERIES UNITS |
|---|---|---|
| **A** | Exhaust Outlet | 3" Schedule 40 |
| **B** | Combustion Air | 3" Schedule 40 |
| **C** | Cold Domestic Water Connection | 1/2" Male NPT |
| **D** | Hot Domestic Water Connection | 1/2" Male NPT |
| **E** | Heating Water Inlet (Return) | 3/4" Male NPT |
| **F** | Heating Water Outlet (Supply) | 3/4" Male NPT |
| **G** | Gas Inlet | 1/2" Male NPT |
| **H** | Condensate Outlet | 3/4" Hose |
| **I** | Control Wiring Passage | 7/16” Rubber Plug |

*Table 1: Connections*

**⚠ WARNINGS**

**- Keep the unit area free and clear of combustible materials, gasoline, and other flammable vapours and liquids.**

**- Combustion air must not be drawn from areas containing corrosive air from swimming pools or spas, including air directly next to outdoor pools and spas.**

**- The unit must not be exposed to water leaks from piping or components located overhead. This includes condensation dropping from un-insulated cold water lines overhead.**

**- Ensure the gas ignition system components are protected from water (dripping, spraying, rain, etc.) during appliance operation and when servicing (pump replacement, condensate trap servicing, control replacement, etc.)**

# 1.2 CODE REQUIREMENTS

The SFC units are certified under CSA 4.9 / ANSI Z21.13 and Water Heater CSA 4.3 / ANSI Z21.10.3.

The installation must conform to the requirements of the authority having jurisdiction or, in the absence of such requirements, to the *National Fuel Gas Code, ANSI Z223.1/NFPA 54, and/or Natural Gas and Propane Installation Code, CAN/CSA B149.1.* The installation must also conform to the Canadian Electrical Code Part 1 CSA C22.2 No.1 and/or the National Electrical Code ANSI/NFPA 70. Where required by jurisdiction, the installation must conform to the Standard for Controls and Safety Devices for Automatically Fired Boilers, ANSI/ASME CSD-1. If there is any conflict, then the more stringent will apply.

# 1.3 LOCATION

The SFC series unit is designed and approved for indoor installation. Its venting options provide flexibility of location; for example, placement in an alcove, basement, utility room or closet. The unit is approved for installation in a closet (see Table 2 for clearances to combustibles).

**Conditions for safe installations**

Ensure that the surrounding conditions are 0°C to 50°C *and less than 90% relative humidity.*

**Install the unit in areas where the combustion air source is not subject to chemical fouling or agricultural vapours.**

**Exposure to corrosive chemical fumes such as chlorinated and/or fluorinated hydrocarbons can reduce the life of a unit.** Cleaners, bleaches, air fresheners, refrigerants, aerosol propellants, dry-cleaning fluids, de-greasers and paint-removers contain vapors that can form corrosive acid compounds when burned in a gas flame. Also avoid airborne chlorides such as those released with the use of laundry detergents.

Avoid installing the unit where water leakage may damage the area (for example, above carpeting). If a location such as this cannot be found, a suitable drain pan should be installed under the appliance.

**Unit fastening**

Approximate weight for the unit is 85 lbs / 39 kg. For support fasteners, use the two of the four supplied ¼" x 2½" long lag screws. Installers will supply 1/4" bolts if metal mounting systems are used. Attach fasteners to solid material that are capable of supporting the combined weight of the unit and piping assembly components.

**Unit clearance**

Other factors affecting potential mounting sites:

- Ensure minimum clearance requirements for combustible materials *(see Table 2)* are satisfied.
- For ease of access, we recommend a minimum 24" clearance at the front and 24" above. Check local codes for additional access and service clearance requirements.
- **At a new construction site, or during renovations, protect the unit from drywall dust or other construction related contaminants. Combustion air must be drawn from a CLEAN source (e.g. outdoors) and the unit must be isolated from interior dust sources.**

**⚠ DANGER**

**Do not common vent the SFC modulating series units with any other existing or new appliance.**

**⚠ WARNINGS**

**Exposed water piping and associated components (relief valves, circulators, etc.) should not be in contact with combustible materials. Check local codes for required clearances and/or provide adequate insulation.**

**DO NOT MOUNT THIS UNIT TO HOLLOW WALL STRUCTURES - The combined weight of the unit, its water contents and associated piping components can exceed 150 pounds(68kg). Fasteners must be rated for this strain, and must be firmly anchored into solid material that will support this weight.**

**Take precautions to avoid injury during the installation of this unit.**

| SURFACE | DISTANCE FROM COMBUSTIBLE SURFACES | RECOMMENDED DISTANCE FOR INSTALLATION AND SERVICE |
|---|---|---|
| Front | 2" | 24" |
| Rear | 0" | 0" |
| Left Side | 1.5" | 6" (labels may be difficult to read with reduced clearance) |
| Right Side | 4" | 6" (labels may be difficult to read with reduced clearance) |
| Top | 2" | 24" |
| Bottom | 8" | 24" |

*Table 2: Clearance from the unit cabinet*

**You must provide a minimum distance below the unit of 8" to allow clearance for the supplied condensation trap assembly. More clearance will typically be required to accommodate associated water and gas piping.**

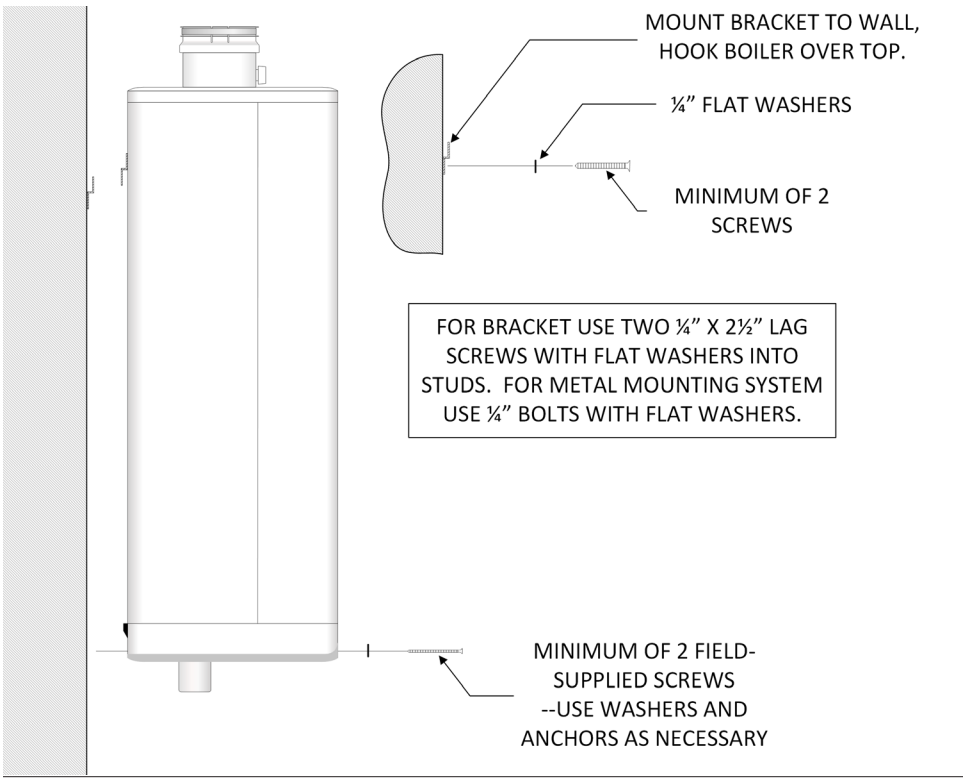


*Figure 2: Wall mounting of unit*

Note: The two lower screws, washers and anchors are field-supplied.

## 1.3.1 Mobile Home Installations

Units installed in a mobile or manufactured home must conform to the local building codes.

**⚠ WARNING**

**Venting, condensate drainage, and combustion air systems for all IBC units must comply with applicable codes and the instructions of their respective Installation manuals.**

**Inspect finished vent and air piping thoroughly to ensure all are airtight and comply with the instructions provided and with all requirements of applicable codes.**

**Failure to comply will result in severe personal injury or death.**

**⚠ NOTES**

**The minimum thickness of the wall for venting penetration is 1" and the maximum thickness for venting is 14".**

**Do not connect a boiler to a chimney flue serving a separate appliance designed to burn solid fuel.**

**The air intake fitting can be moved to the left or to the right of the exhaust fitting.**

# 1.4 EXHAUST VENTING AND AIR INTAKE

When you plan the installation, ensure that you consider appropriate venting materials, travel and termination decisions. In particular, you should manage the impact of the steam plume typically at the exhaust terminal of a condensing unit. Generally, intake and exhaust pipes terminate at a rooftop or sterile wall location. Keep exhaust plumes well away from all building air intakes including those of neighbouring properties.

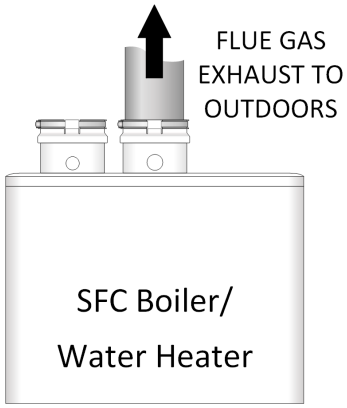


*Figure 3: Basic exhaust vent assembly*

Install venting in accordance with the requirements of the jurisdiction having authority: in Canada, Part 8, *Venting Systems* of the B149.1-10 Code and any other local building codes are to be followed. In the USA the National Fuel Gas Code, ANSI 223.1, latest edition, prevails. Where there is a discrepancy between the installation instructions below, and the code requirements, you must apply the more stringent of the two.

Provisions for combustion and ventilation air in accordance with the section "Air for Combustion and Ventilation," of the *National Fuel Gas Code, ANSI Z223.1/ NFPA 54*, or Clause 8.2, 8.3 or 8.4 of *Natural Gas and Propane Installation Code, CAN/CSA B149.1*, or applicable provisions of the local building codes.

**IMPORTANT**

When an existing unit is removed from a common venting system, the common venting system is likely to be too large for proper venting of the appliances remaining connected to it.

When re-sizing any portion of the common venting system, the common venting system should be re-sized to approach the minimum size as determined using the appropriate tables in the National Fuel Gas Code, ANSI Z223.1 - latest edition. In Canada, use the B149.1 Installation Code - latest edition.

**Removal of an existing unit**

For each appliance remaining connected to the common venting system, you must follow the steps below. Before you begin, ensure that any other appliances connected to the common venting system are not in operation.

- Seal any unused opening in the common venting system.
- Inspect the venting system for proper size and horizontal pitch, and determine that there is no blockage or restriction, leakage, corrosion and other deficiencies that could cause an unsafe condition.
- Where practical, close all building doors and windows. This includes closing the doors of the appliances remaining connected to the common venting system. Turn on clothes dryers and any appliance not connected to the common venting system. Turn on any exhaust fans, such as range hoods and bathroom exhausts, so they will operate at maximum speed. Do not operate a summer exhaust fan. Close fireplace dampers.
- Place in operation the appliance being inspected. Follow the lighting instructions. Adjust the thermostat, so that the appliance operates continuously.
- After determining that each appliance remaining connected to the common venting system properly vents when tested as outlined above, return doors, windows, exhaust fans, fireplace dampers and any other gas-burning appliance to their previous conditions of use.
- Correct any improper operation of the common venting system to ensure that the installation conforms to the National Fuel Gas Code, ANSI Z223.1 - latest edition. In Canada, all installations must conform to the current CAN/CGA - B149.1 Installation Code and/or local codes.

## 1.4.1 Applications

All SFC series models must be installed as a Direct Vent venting system. The combustion air must be piped in from the outdoors and connected directly to the unit's combustion air connection. *See section 1.4.7 for air intake piping requirements.*

**⚠ NOTE**

**The flue gas temperature sensor reports the current flue gas exhaust temperature to the unit's controller. If necessary, the controller will reduce the input of the appliance to meet the flue gas exhaust temperature requirements of PVC material. The controller locks out the unit if this temperature is exceeded, and displays F002.**

## 1.4.2 Exhaust Vent Material

**Exhaust Vent Material – CANADA**

Use only PVC, CPVC, or Polypropylene (PPs) vent components. Venting components must be approved for use with a Category IV appliance, listed under ULC 636 and must comply with CSA B149.1 (latest edition).

- ULC-636 - PVC
- ULC-636 - CPVC
- ULC-636 - PPs

**Exhaust Vent Material – USA**

Use only PVC, CPVC, or Polypropylene (PPs) vent components. Venting components must be approved for use with a Category IV appliance, (UL1738 or ULC636).

- PVC Schedule 40 –Solid Core
- CPVC Schedule 40 or 80 – Solid Core
- Approved Polypropylene venting materials

**⚠ WARNINGS**

**- Do not mix venting materials from different Polypropylene manufacturers.**

**These venting materials are designed to be installed as part of a complete system.**

**Failure to comply may result in severe personal injury or death.**

**- Fully insert the approved venting material into the unit's exhaust outlet and tighten clamp to ensure the venting connection is locked in place.**

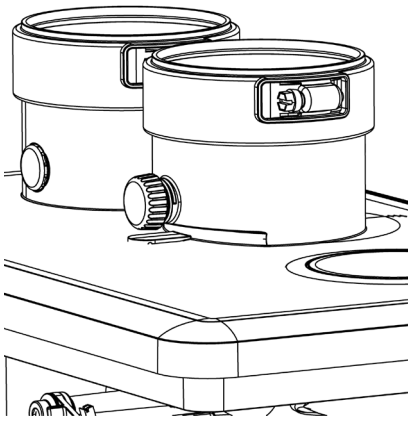

*Inlet and outlet vent connections. Note the flue exhaust test port.*

**Exhaust Venting Material – Other**

**Do not use ABS or any cellular core pipe for exhaust venting.**

Use of cellular core PVC (ASTM F891), cellular core CPVC, or Radel® (polyphenolsulfone) in venting systems are prohibited.

The unit offers 3" venting connections. Use fittings to adapt to the appropriate diameter *(see Vent Travel below).* Insert CPVC or PVC exhaust venting directly into the 3" female fitting on the unit's top panel. To secure the pipe into the fitting, tighten the clamp. If PPs materials are being used, ensure the proper adapter is used to transition from the Schedule 40 diameter to the PPs-size diameter.

For PPs material, use the 3" transition/adaptor fitting (Sch 40 to PPs) offered by the respective PPs manufacturers Centrotherm/*Innoflue*™ (their part # ISAAL0303), M&G Dura Vent/PolyPro #3PPS-AD, or #3PPS-3PVCM-3PPF. For PPs material exposed to outdoor weather, follow the venting suppliers' recommendations on UV protection.

Combustion air piping is inserted directly into the 3" female plastic fitting on the right.

Venting must be supported in accordance with applicable code.

**Manufacturers of stainless steel Type BH venting systems must submit their approved transition fitting to IBC for evaluation and written approval.**

## 1.4.3 Vent Travel

PVC, CPVC or PPs (Rigid Single Wall) piping is the standard venting option that enables units to be vented up to 120 equivalent feet from the vent termination using 3". The actual vent travel allowance is reduced for fittings in accordance with *Table 3.*

**Example:** For the models listed above, using 6 x 90º CPVC elbows, the maximum lineal measure of pipe allowed using 3" pipe is 72 feet (120' – (6 x 8' = 48') = 72').

For 3" Flexible PPs, up to 35 actual lineal feet are allowed in a nominally vertical orientation (>45°). The equivalent length of 3" Flexible PPs is calculated using a multiple of 1.4:1, e.g. 35' x 1.4 = 49' equivalent. The balance of the venting allowance is still available for use with rigid PPs piping material.
2" Flexible PPs is not allowed.

| EXHAUST PIPE SIZE/FITTINGS | MAXIMUM EQUIVALENT LENGTH |
|---|---|
| **Schedule 40 PVC, CPVC or PPs – Allowances are for each side separately.** | |
| 2" | 35' |
| 3" | 120' |
| 2" or 3" 90' Long Sweep Vent Elbow | Allow 5 equivalent feet |
| 2" or 3" 90' Short Sweep Vent Elbow | Allow 8 equivalent feet |
| 2" or 3" 45' Vent Elbow | Allow 3 equivalent feet |
| **PPS** | |
| PPs 87-90' Elbow | Allow 8 equivalent feet |
| **Flex PPS – Factor = 1.4** | |
| 3" PPs Flex | Length multiplied by 1.4 actual feet (Max. 35) ' |

*Table 3: Maximum Exhaust Venting Length*

**Follow all installation instructions supplied by the pipe and fitting manufacturer.** Prior to assembly, ensure all venting components are clean of burrs/debris. Ensure that ingestion into the fan of PVC debris (left in the combustion air piping) is avoided.

**BEST PRACTICES**

**To reduce the possibility of expansion noise, allow a 1/4" gap around the exhaust and air intake piping.**

**General Venting/Piping Requirements**

Slope exhaust venting towards the unit with a pitch of at least 1/4" per foot. Follow PPs manufacturer requirements, so condensate runs back towards the trap. Support should be provided for intake and vent piping, particularly for horizontal runs (follow the local code).

Insert exhaust piping directly into the 3" female plastic fitting on the top center of the unit, and run it horizontally or vertically to the outdoors. We recommend using a bird screen of 1/4" stainless steel or plastic mesh (e.g., IPEX System 636 drain grate for CPVC systems to guard against foreign objects.

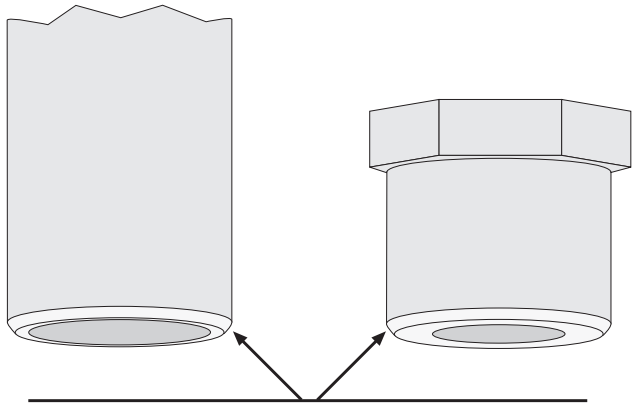

**ENSURE PIPE AND FITTINGS ARE BEVELED FOR TROUBLE-FREE INSERTION THROUGH EXHAUST AND INTAKE PIPE GASKETS**

**WET GASKETS AND PIPE BEFORE INSERTION**

*Figure 4*

Secure joints using appropriate solvent cement to bond the respective pipe material (Canada: PVC/CPVC cement approved under *ULC-S636, in accordance with its manufacturer instructions;* USA: PVC (ASTM D2564), or PVC (D2235). Use transition glue anywhere that PVC and CPVC are joined. Follow the cement manufacturer's instructions closely when joining various components. For PPs, connections must be secured using approved retainer clips supplied by the respective PPs manufacturer.

Ensure that all vent connections are liquid and pressure tight. Prior to firing the unit, and before any of the venting run is concealed by the building construction, you must test the exhaust joints with a soap/water solution. You must fill the condensate trap before testing.

**⚠ CAUTION**

**Vent termination clearances in this section are code minimum, or IBC recommended minimum requirements, and may be inadequate for your installation. You must examine building envelope details, and take measures to avoid admission of moisture into building structures. Serious structural damage may occur if adequate precautions and clearances are not allowed for.**

**These precautions are to be observed for neighbouring structures as well as for the structure the unit(s) are installed in.**

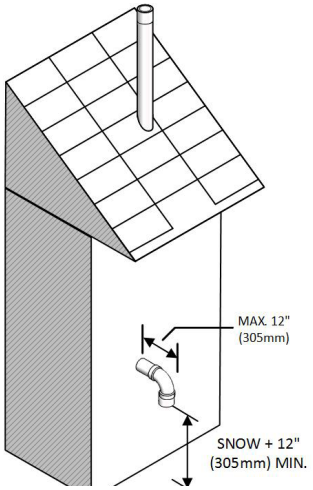


*Figure 5a: Rooftop vent terminal configurations*

**⚠ WARNING**

**Condensate can cause corrosion of metal roofing components and other roofing materials. Check with the builder or roofing contractor to ensure that materials are resistant to acidic condensate. pH levels can be as low as 3.0**

## 1.4.4 Venting Passage Through Ceiling and Floor

- Confirm material meets local codes including fire stopping requirements. Some local jurisdictions require that a minimum initial length of pipe be exposed or accessible for inspection.
- Pipe clearances - no IBC requirements, but best practice allows a minimum 1/4" gap around the pipe to prevent binding and expansion noise. Follow local codes.
- All piping must be liquid and pressure tight.

## 1.4.5 Rooftop Vent Termination

**Direct Vent - Two Pipe**

Rooftop vents must terminate as follows:

- The exhaust pipe can terminate in an open vertical orientation without concern about rain infiltration; rain will drain away through the condensate trap.
- The intake air pipe is not typically drained, so it must be terminated with a down-turned elbow *(see Figure 5b).* The intake pipe does not need to penetrate the roof at the same elevation as the exhaust (as shown); lower down the roof is OK.
- The air intake pipe may terminate on the side wall of the building as long as the air intake terminal is turned down and the side wall of the building is not exposed to large wind loads i.e.,: prevailing wind (see Figure 5a).
- Optional bird screen may be placed in a termination fitting. Leave unglued, and hold in place with a short nipple to allow easy access for cleaning.
- For roof top venting of multiple unit sets, group all intake terminals together for a common penetration through a custom cap. Alternatively, place in the closest proximity achievable using commonly available pipe flashing. Similarly, group the exhaust pipes and place the 2 separate groups of pipes at least 3' apart (the closest intake and exhaust pipes must be 36" - or more - apart). Use the same 12" (minimum) vertical separation for 2 pipe option. For alternative group terminations, contact the IBC Factory for written guidance.
- **DO NOT exhaust vent into a common venting system.**

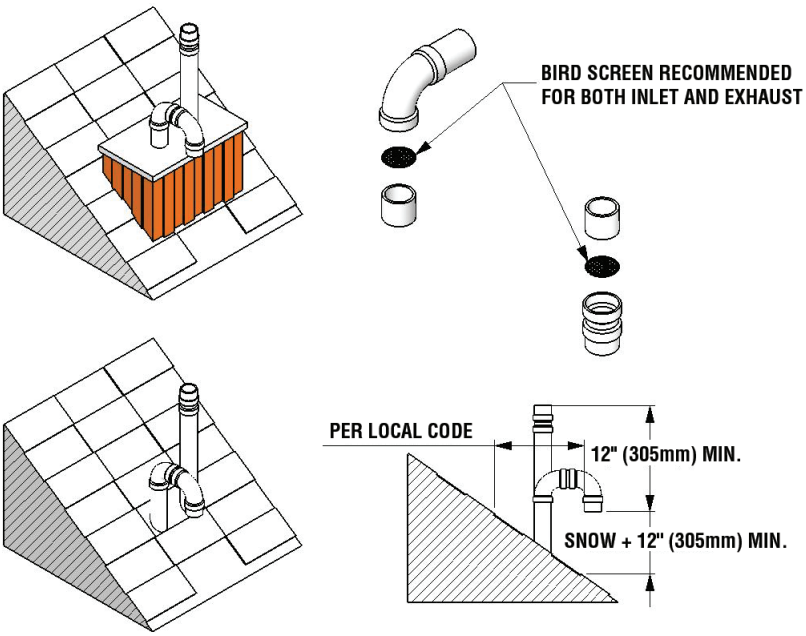


*Figure 5b: Rooftop vent terminal configurations*

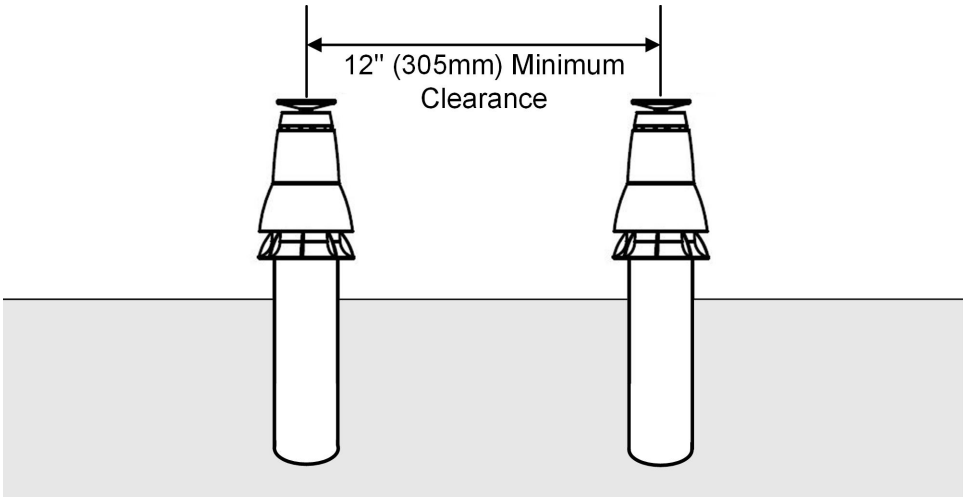


*Figure 6: Vertical Concentric Termination - Two Kits*

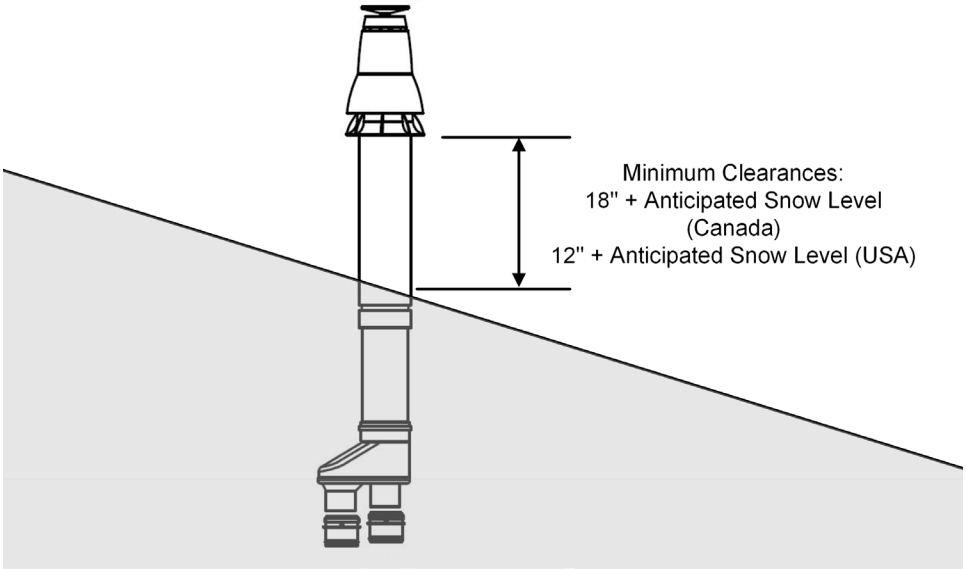


*Figure 7: Vertical Concentric Termination - Single Kit*

## DIRECT VENT CONCENTRIC ROOF TOP TERMINATION

Roof Top Concentric Termination kits are approved for use with this unit.
For vertical roof top concentric terminations, you must follow the installation instructions supplied with the venting material manufacturer. Care must be taken to install the termination kit a minimum horizontal distance of 10' (305cm) away from any portion of the building and a minimum of 18" (46cm) above the roof line plus the anticipated snow line (s*ee Figures 6 and 7).*

**⚠ WARNINGS**

**- You must maintain at least the minimum separation of exhaust vent termination from unit's intake air as illustrated in figures 5, 8 and 12. Failure to do so can result in a dangerous situation where exhaust gases are re-ingested with combustion air. Damage to the unit can result from a failure to maintain these separations. Improper installation will void the warranty.**

**- You must not cover non-metallic vent pipe and fittings with thermal insulation.**

**- In areas of high snowfall, users must be advised to check side wall vent and air intake terminations on a regular basis to ensure blockage does not occur.**

## 1.4.6 Sidewall Vent Termination

**Direct Vent - Two Pipe**

Sidewall direct vent applications must be vented as follows:

- Both the inlet and exhaust terminations must be located on the same plane (side) of the building.
- The exhaust outlet is to be placed so as to reach 12" minimum above the down-turned intake - to avoid intake re-ingestion of exhaust gases.
- The elevation of both pipes can be raised in "periscope style" after passing through the wall, then configured as in *Figure 8,* to gain required clearance.
- Use a 45° elbow on the exhaust termination to launch the plume up and off the sidewall, for protection of wall.
- Bird screen of 1/4" stainless steel or plastic mesh eg. (IPEX System 636 drain grate for CPVC systems) is useful to guard against foreign objects.

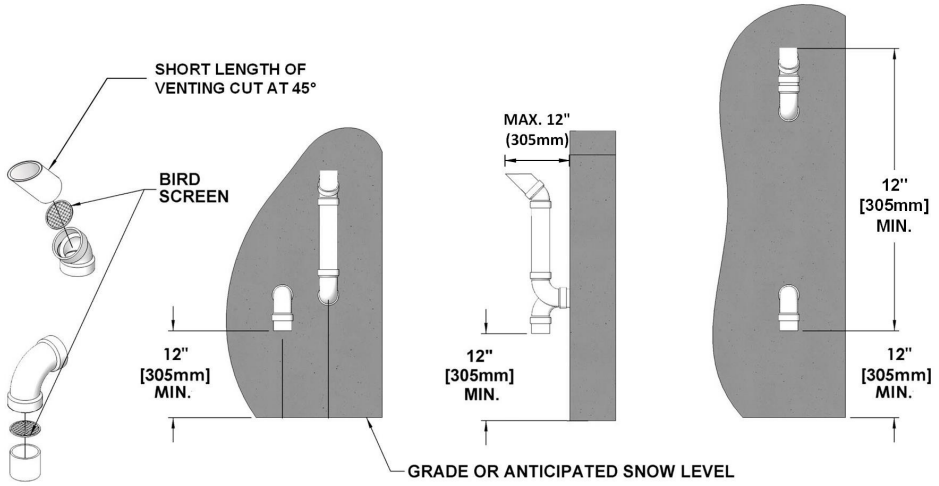


*Figure 8: Sidewall vent termination - piping configuration*

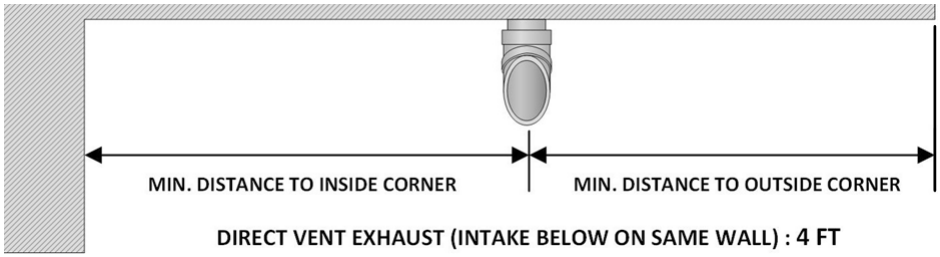


*Figure 9: Top view - minimum distance of exhaust vent to inside and outside corners.*

**DIRECT VENT SIDE WALL TERMINATION KITS**

The Side Wall Termination kits approved for use with the SFC series units are subject to restrictions. **NOTE:** Some jurisdictions may not allow this type of side wall termination due to close proximity to the neighboring properties. *See Figures 10, 11a and 11b on page 1-12.*

You must follow the installation instructions, clearances and wall thickness requirements recommended of the approved vent termination manufacturer.

Approved Side Wall Termination Kits are listed below: (Alternative vent termination kits must be submitted to IBC for approval prior to installation.)

- Ipex - #196984 – 2" PVC low profile termination kit
- Ipex - #196985 – 3" PVC low profile termination kit

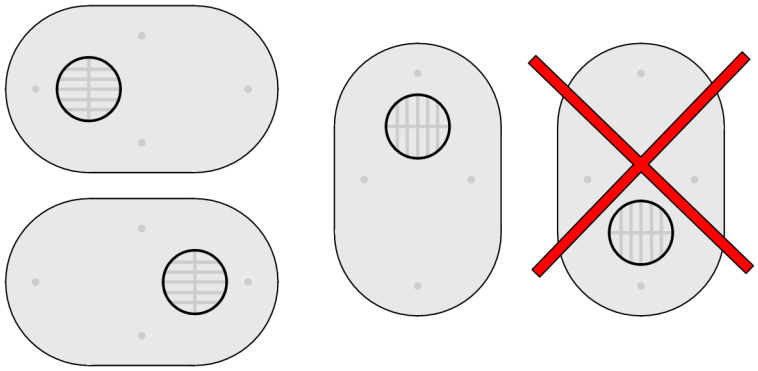

*Figure 10: Ipex #196984 2" PVC and #196985 3" PVC*

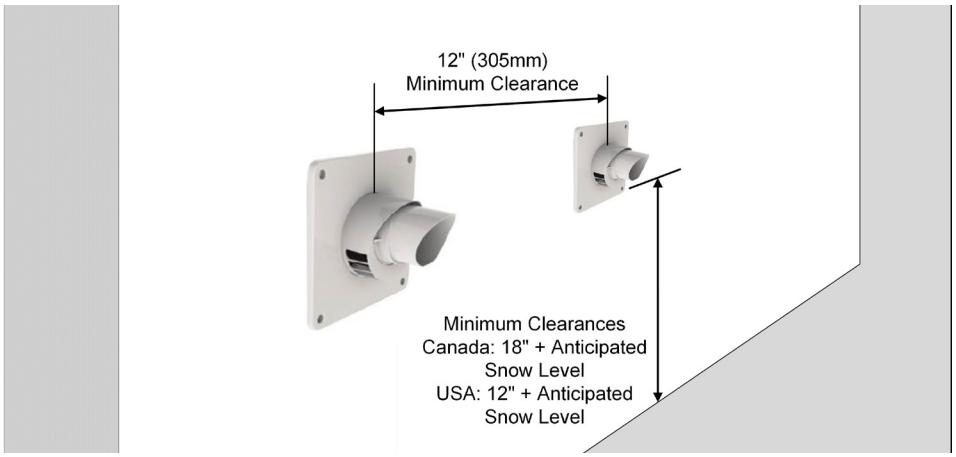


*Figure 11a: Horizontal Concentric Termination - Two Kits*

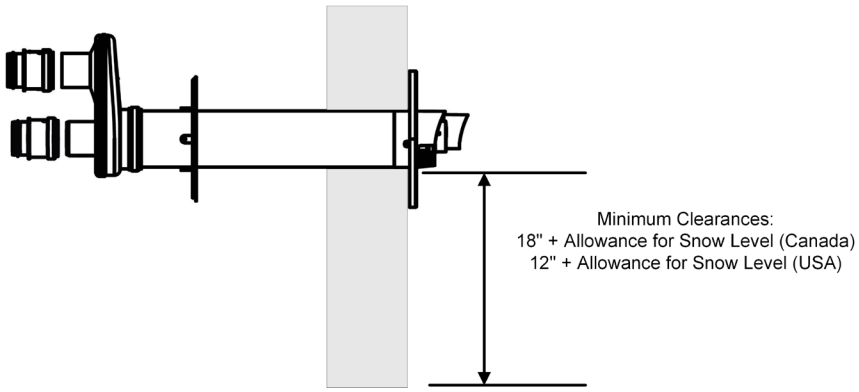


*Figure 11b: Horizontal Concentric Termination - Single Kit*

**⚠ WARNING**

**The vent for this appliance must not terminate:**

**1. Over public walkways.**

**2. Near soffit vents or crawl space vents or other areas where condensate or vapor could create a nuisance or hazard or cause property damage.**

**3. Wherever condensate vapor could cause damage or could be detrimental to the operation of regulators, relief valves, or to other equipment.**

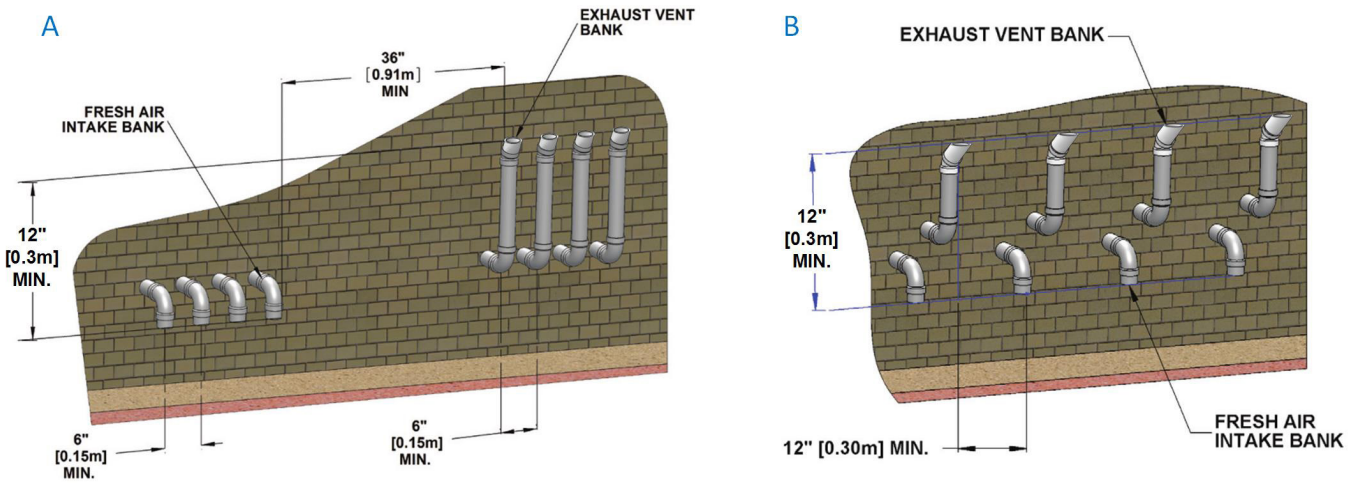


*Figure 12: Sidewall vent termination - multiple vent piping configuration*

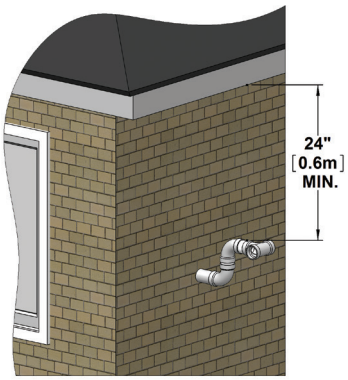


*Figure 13: IBC recommended minimum vent terminal clearance under ventilated soffit*

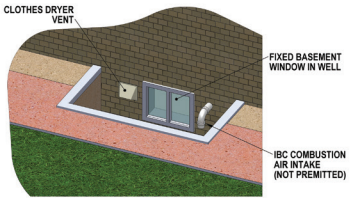


*Figure 14: Prohibited installation*

For side venting of multiple unit sets, group all intake terminals together with 6" (minimum) lateral spacing, and similarly group the exhaust pipes. Place the 2 groups on the same plane of the building (e.g., north facing wall). Place the 2 groups of pipes at least 3' apart (the closest intake and exhaust pipes must be 36" - or more – apart). Use same 12" (minimum) vertical separation (see A in Figure 12). Alternatively, as long as the units are identical models - intake and exhaust terminals can maintain a minimum of 12" of separation horizontally from any exhaust or inlet termination of an adjacent unit (see B in Figure 12). For alternative group terminations, contact the IBC Factory for written guidance.

**Concentric Side Wall Termination Kits**

Installation of multiple Concentric Side Wall Termination kits:

- On the same horizontal line (not stacked)
- With a minimum vertical separation of 12” center to center

Use caution when installing Concentric Side Wall Termination kits when the outdoor design temperature is below 5°F / -15°C. Possible blockage of the combustion air intake increases when the outdoor temperature drops below this temperature.

Approved Concentric Side Wall Termination Kits are listed below: (Alternative vent termination kits must be submitted to IBC for approval prior to installation.)

- Centrotherm – Innoflue #ICWT242 (2” termination) + ICTC0224 (2” transition to 2 pipe)
- Centrotherm – Innoflue #ICWT352 (3” termination) + ICTC0335 (3” transition to 2 pipe)
- Duravent – Polypro #3PPS-HK – Horizontal Termination Kit – Concentric
- Ipex #197006 – 3" PVC Concentric Termination kit
- Ipex #197009 – 3" CPVC Concentric Termination kit

## ⚠ WARNINGS

**- In addition to preventing ingestion of chemical contaminants, care must be taken to ensure air intake terminals are not installed in locations where contamination might occur due to ingestion of particulate foreign material (dust, dirt and debris).**

**- Intake air openings must be configured such that rain or other forms of moisture cannot enter the air intake piping system. Otherwise serious damage to the unit may result.**

## ⚠ NOTE

**Care must be taken when installing air intake piping to ensure that a "trap" is not formed in the piping so as to allow a build-up of water, and blockage of intake air.**

**Vent terminal clearance minimums are as follows:**

| VENT TERMINAL MINIMUM CLEARANCES | CANADIAN INSTALLATIONS[1] | US INSTALLATIONS[2] |
|---|---|---|
| A= Clearance above grade, veranda, porch, deck, or balcony | 12 in (30 cm) | 12 in (30 cm) |
| B= Clearance to window or door that may be opened | 6 in (15 cm) for appliances ≤ 10,000 Btuh (3 kW), 12 in (30 cm) for appliances > 10,000 Btuh (3 kW) and ≤ 100,000 Btuh (30 kW), 36 in (91 cm) for appliances >100,000 Btuh (30 kW) | 6 in (15 cm) for appliances ≤ 10,000 Btuh (3 kW), 9 in (23 cm) for appliances > 10,000 Btuh (3 kW) and ≤ 50,000 Btuh (15 kW), 12 in (30 cm) for appliances > 50,000 Btuh (15 kW) |
| C= Clearance to permanently closed window | * | * |
| D= Vertical clearance to ventilated soffit located above the terminal within a horizontal distance of 2 ft (61 cm) from the center line of the terminal. | * | * |
| E= Clearance to unventilated soffit | * | * |
| F= Clearance to outside corner | 4ft (1.22m) or local code, whichever is stricter. | 4ft (1.22m) or local code, whichever is stricter. |
| G= Clearance to inside corner | 4ft (1.22m) or local code, whichever is stricter. | 4ft (1.22m) or local code, whichever is stricter. |
| H= Clearance to each side of center line extended above meter/regulator assembly | 3 ft (91 cm) within a height 15 ft above the meter/ regulator assembly | * |
| I= Clearance to service regulator vent outlet | Above a regulator within 3 ft (91 cm) horizontally of the vertical center line of the regulator vent outlet to a maxiumum vertrical distance of 15 ft (4.5 m) | * |
| J= Clearance to nonmechanical air supply inlet to building or the combustion air inlet to any other appliance | 6 in (15 cm) for appliances ≤ 10,000 Btuh (3 kW), 12 in (30 cm) for appliances > 10,000 Btuh (3 kW) and ≤ 100,000 Btuh (30 kW), 36 in (91 cm) for appliances >100,000 Btuh (30 kW) | 6 in (15 cm) for appliances ≤ 10,000 Btuh (3 kW), 9 in (23 cm) for appliances > 10,000 Btuh (3 kW) and ≤ 50,000 Btuh (15 kW), 12 in (30 cm) for appliances > 50,000 Btuh (15 kW) |
| K= Clearance to a mechanical air supply inlet | 6 feet (1.83 m) | 3 ft (91 cm) above if within 10 ft (3 m) horizontally |
| L= Clearance above paved sidewalk or paved driveway located on public property | 7 ft (2.13 m) † | * |
| M= Clearance under veranda, porch deck, or balcony | 12 in (30 cm) ‡ | * |

1 In accordance with the current CSA B149.1 Natural Gas and Propane Installation Code

2 In accordance with the current ANSI Z223.1 / NFPA 54 National Fuel Gas Code

† A vent shall not terminate directly above a sidewalk or paved driveway that is located between two single family dwellings and serves both dwellings.

‡ Permitted only if veranda, porch, deck, or balcony is fully open on a minimum of two sides beneath the floor.

* Clearance in accordance with local installation codes and the requirements of the gas supplier.

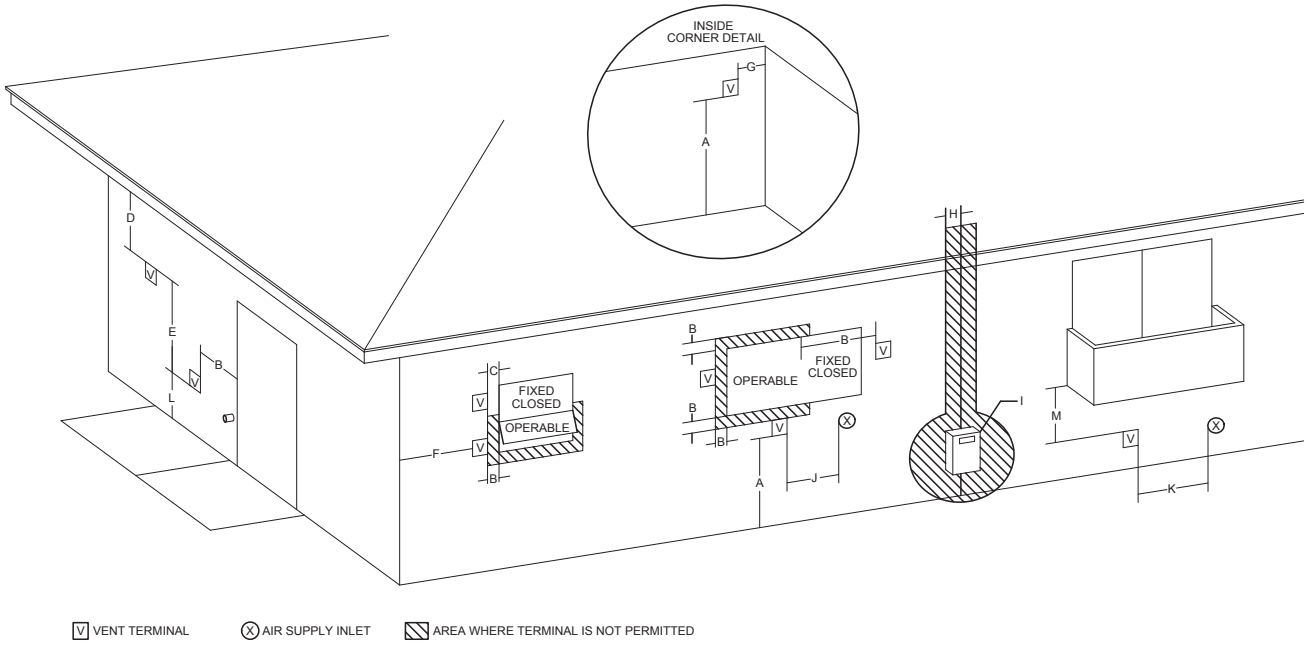


*Figure 15: Vent Terminal Clearance*

## 1.4.7 "Direct Vent" Combustion Air Intake Piping

The unit must always be installed as a Direct Vent venting system with the combustion air piped directly from the outdoors to the unit's combustion air connection. Provisions for combustion and ventilation air are in accordance with the section "Air for Combustion and Ventilation," of the *National Fuel Gas Code, ANSI Z223.1/NFPA 54*, or Clause 8.2, 8.3 or 8.4 of *Natural Gas and Propane Installation Code, CAN/CSA B149.1*, or applicable provisions of the local building codes.

Combustion air connection may be moved from one side to the other:

- Lift tab at back of plug.

- Rotate counter-clockwise 1/8th of a turn.

- Lift plug out of cabinet and move to other opening: rotate plug and push down tab to lock in place.

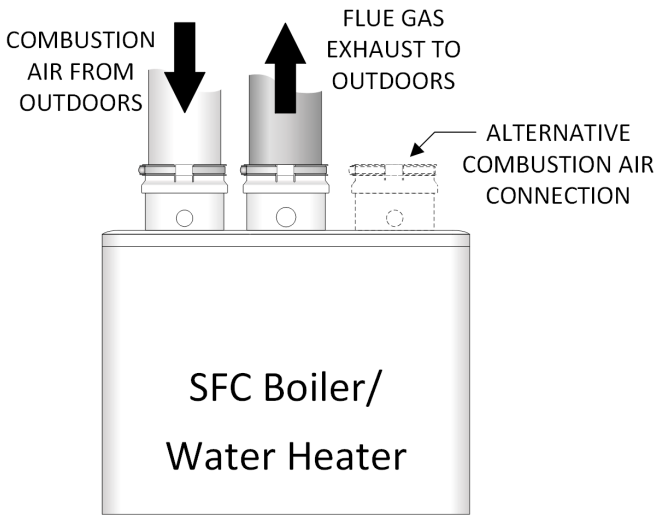


*Figure 16: Direct vent combustion air intake*

**Intake Pipe Sizing**

For 3" Flexible PPs, you can use up to 35 actual lineal feet in a nominally vertical orientation (>45°). The equivalent length of 3" Flexible PPs must be calculated using a multiple of 1.4:1, e.g. 35' x 1.4 = 49' equivalent. The balance of the venting allowance is still available for use with rigid PPs piping material.
2" Flexible PPs is not allowed.

| INTAKE PIPE SIZE/FITTINGS | MAXIMUM EQUIVALENT LENGTH |
|---|---|
| **Schedule 40 PVC, ABS, CPVC or PPs – Allowances are for each side separately.** | |
| 2" | 35' |
| 3" | 120' |
| 2" or 3" 90' Long Sweep Vent Elbow | Allow 5 equivalent feet |
| 2" or 3" 90' Short Sweep Vent Elbow | Allow 8 equivalent feet |
| 2" or 3" 45' Vent Elbow | Allow 3 equivalent feet |
| **PPS** | |
| PPs 87-90' Elbow | Allow 8 equivalent feet |
| **Flex PPS – Factor = 1.4** | |
| 3" PPs Flex | (Max. 35) actual feet times 1.4 |

*Table 4: Maximum intake piping length.*

For air intake, you can use Schedule 40 PVC, CPVC, ABS or PPs piping of any type. Use the same diameter as vent piping.

Insert combustion air piping directly into the 3" female plastic fitting on the top of the unit, and run it horizontally or vertically to the outdoors. We recommend using a bird screen of 1/4" stainless steel or plastic mesh (eg. IPEX System 636 drain grate for CPVC systems) to guard against foreign objects.

Care must be taken to ensure adequate separation is maintained between the air intake inlet and the vent terminal. Refer to the vent terminal configuration drawings in the “Vent Termination” section above.

Support should be provided for intake piping, particularly for horizontal runs (follow local code).

## 1.4.8 “Indoor Air” Combustion Air Intake

Indoor combustion air is not approved for use with the SFC series units.

## 1.4.9 Closet Installations

For installations in a confined space (such as a closet), ventilation openings may be needed through a door or wall to prevent build-up of excessive heat from inside the space.

The unit must not be exposed to surrounding conditions above 122°F (50°C) or below 32°F (0°C).

**⚠ WARNING**

**Fill the trap with water before first firing the unit to prevent exhaust fumes from entering the room. Never operate the water heater unless the trap is filled with water.**

**Failure to comply will result in severe personal injury or death.**

**⚠ NOTE**

**It is the responsibility of the installing and/or service Contractor to advise and instruct the end user on how to perform the Trap cleaning procedure, and to advise that the trap be checked at least every two months and cleaned as required.**

# 1.5 CONDENSATE REMOVAL

IBC's specified vent configuration promotes the safe drainage of moisture from the unit and exhaust venting without flowing liquids back through the heat exchanger.

Reliable system operation requires (1) proper design and installation of exhaust venting to allow condensate to run back to the drain/trap; (2) acid pH neutralization as appropriate. To achieve these:

1. Allow for a 1/4" per foot slope back to the vent connection, with appropriate hangers to maintain that gradient.
2. Ensure the supplied trap is correctly installed and filled with water.
3. When required, add (and maintain in good condition) a neutralization tank.

## 1.5.1 Condensate Trap

The condensate trap cup must be installed on the drain connection at the base of the unit.

## 1.5.2 Installing the Condensate Trap

1. Fill the condensate trap cup with water.
2. Place the condensate trap cup into the condensate trap base and twist toward the right.
3. Attach the drain hose to the condensate trap outlet located to the left of the condensate trap.

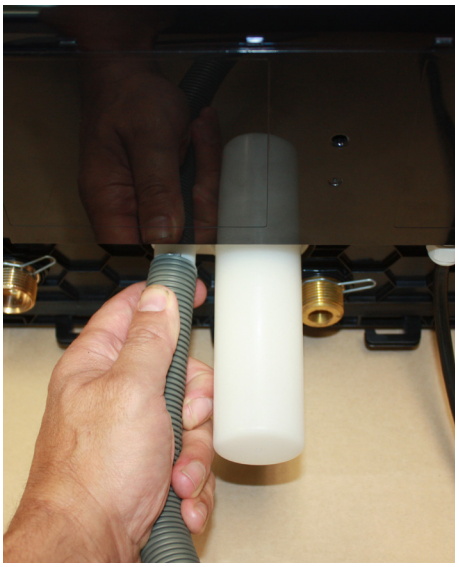

*Figure 17: Condensate trap installation*

### 1.5.3 Cleaning the Condensate Trap

1. Turn off the power to the water heater and allow it to cool down.
2. Twist the condensate trap cup toward the left and lower the trap cup.
3. Rinse out the trap cup and refill with water. Inspect the trap, and clean the interior portion of the trap (attached to the unit).
4. Re-install the condensate trap cup, and twist to the right.

### 1.5.4 Further Installation Details

- Pipe the condensate drain tube to within 1” of a drain, or connect it to a condensate pump.
- Slope the drainage line down to the drain at a pitch of 1/4” per foot, so that the condensate runs towards the drain.
- Check the condensate trap every 2 months, and clean and refill as necessary.

**⚠ DANGER**

**The water in the condensate neutralizer can cause severe burns to the skin. Use extreme caution when servicing the condensate neutralizer. Wear protective gloves and eyewear.**

**⚠ CAUTION**

**When a condensate neutralization package is installed, the pH of the condensate discharge must be measured on a regular schedule to ensure the neutralizing agent is active and effective.**

**⚠ WARNING**

**If discharging condensates into building drain piping materials that are subject to corrosion, you must use a neutralization package.**

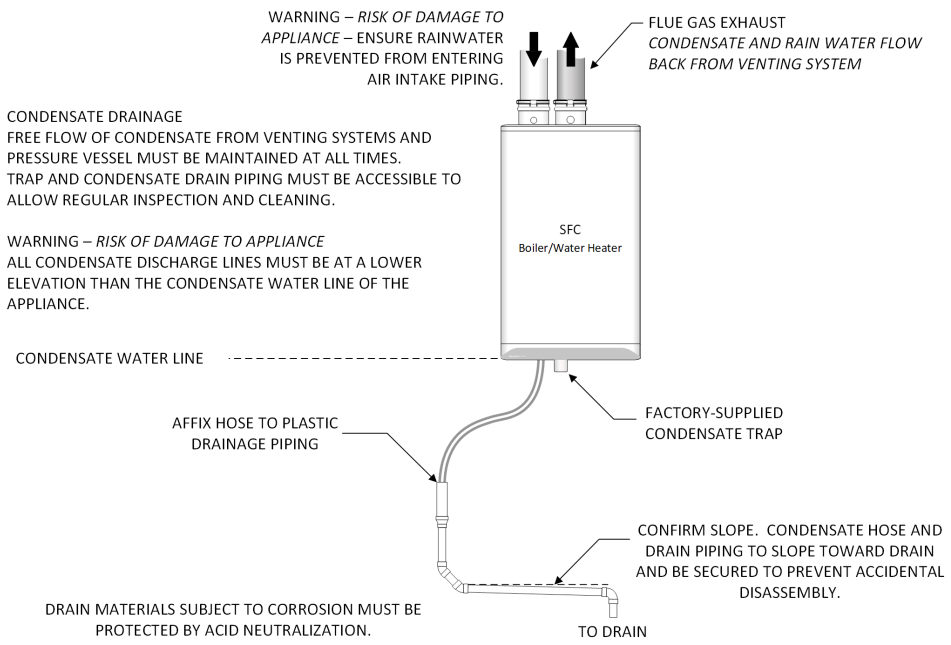


*Figure 18: Condensate trap drainage*

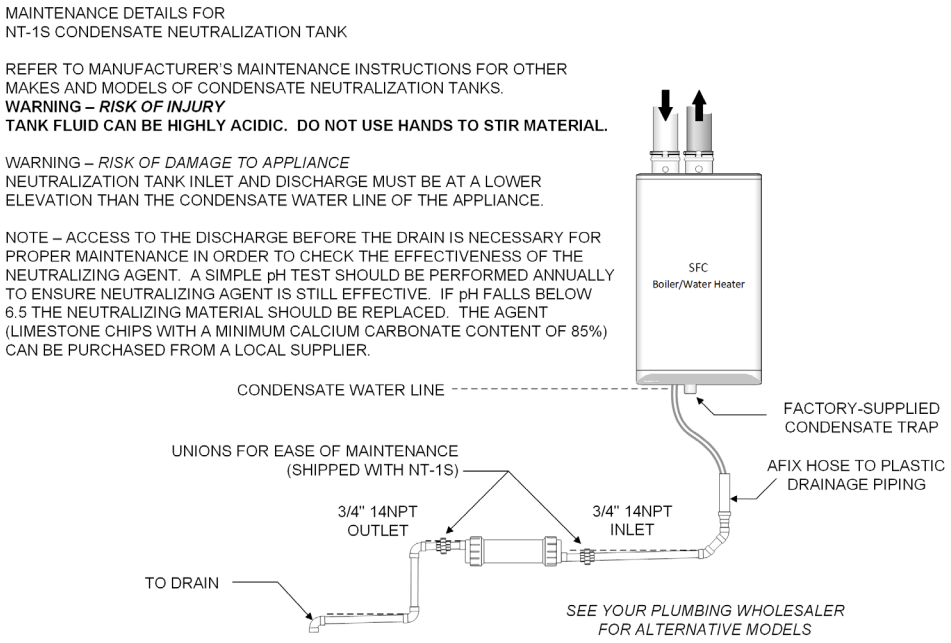


*Figure 19: Condensate neutralization tank*

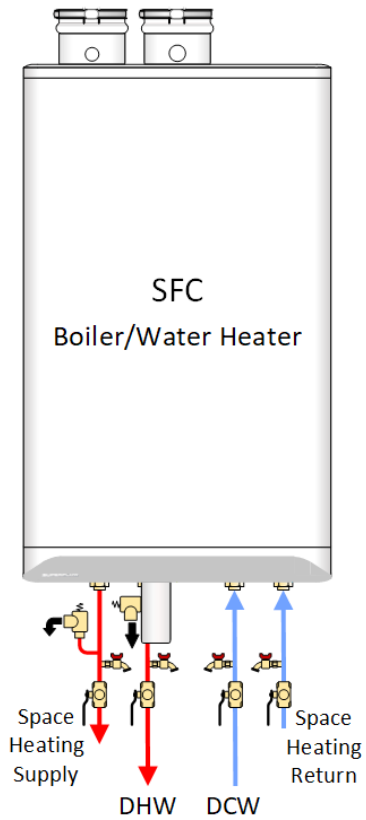


*Figure 20: Overview of piping connections*

# 1.6 WATER PIPING - SPACE HEATING

## 1.6.1 General Piping Considerations

The SFC series units include a factory installed, integral heating pump. The pump is designed to provide adequate flow through the unit and near unit piping.

Primary/secondary piping or the use of a buffer tank / hydraulic separator is recommended for maximum flexibility in multi zone/load applications. Piping loads in parallel is only acceptable in systems where the minimum flow rate is guaranteed to be higher than the minimum for the unit and where the unit's pump is adequate to provide the required flow rate and pump head for the system.

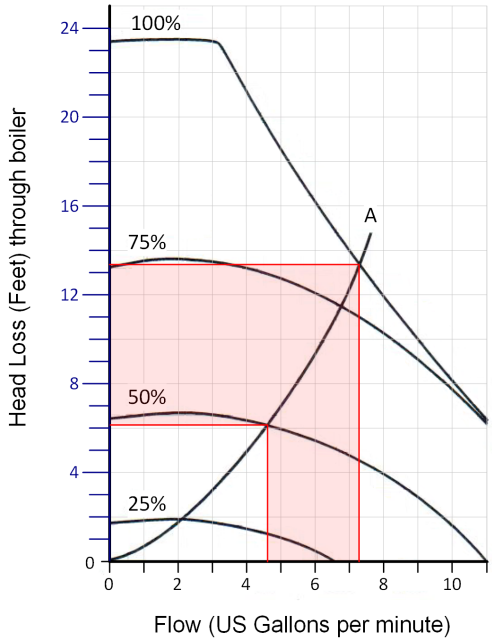


*Table 5: Boiler pressure drop - Pump runs between 50% to 100% capacity to establish pressure difference across boiler circuit*

A=boiler pressure drop

The SFC series modulating units are designed for use within a closed loop, forced circulation, low pressure system. A 30 PSI pressure relief valve (3/4" NPT) is supplied.

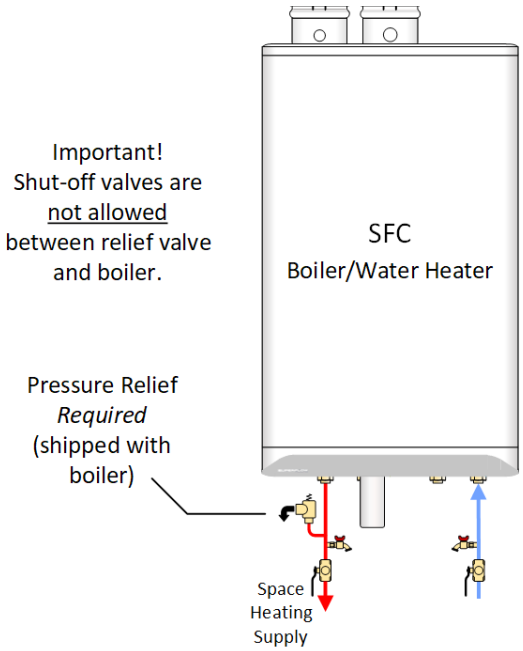


*Figure 21: Relief Piping*

### System Piping

System piping is connected to the unit using the 3/4" NPT Male threaded fittings located on the bottom of the unit. We recommend using unions and gate or ball valves at the unit's supply and return water connections to simplify servicing. Un-insulated hot water pipes require a minimum 1/4" clearance from combustible materials.

Fluid fill is most often accomplished by using a regulator & fill valve set at 12 psig or more, with appropriate backflow prevention device as required by local code. This is acceptable in areas where municipal water or well water has been treated and filtered to remove excessive minerals and sediment, and water chemistry is known to be suitable for closed-loop hydronic systems. When water quality is unknown, or when chemical treatment or glycol is required, you should consider other options. Follow applicable Codes and good piping practice.

Other feed and pressurization devices on the market today may be a better choice than a raw water fill from the mains. When regular maintenance requires relief valve blow-off, the discharge may be directed back into the pressurization unit for recycling of unit fluid and chemicals back into the system. In buildings that may be unoccupied for long periods of time, pressurization units are useful to prevent flood damage should leakage occur from any component in the system. An additional benefit is that backflow prevention devices are not required when using these devices.

**Do not place any water connections above the unit**. Leaks can damage the fan and controls. If needed, create a shield over the top of the cover, but allow clearance for airflow and service access.

## ⚠ WARNING

**During operation, the relief valve may discharge large amounts of steam and/or hot water. To reduce the potential for bodily injury and property damage, a discharge line MUST be installed that:**

1. **Is connected from the valve outlet with no intervening valve and directed downward to a safe point of discharge.**
2. **Allows complete drainage of both the valve and the discharge line.**
3. **Is independently supported and securely anchored to avoid applied stress on the valve.**
4. **Is as short and straight as possible**
5. **Terminates freely to atmosphere where any discharge is clearly visible and is at no risk of freezing.**
6. **Terminates with a plain end which is not threaded.**
7. **Is constructed of a material suitable for exposure to temperatures of 375°F or greater.**
8. **Is, over its entire length, of a pipe size equal to or greater than that of the valve outlet.**

**DO NOT CAP, PLUG OR OTHERWISE OBSTRUCT THE DISCHARGE PIPE OUTLET!**

## ⚠ CAUTION

**Installers should inquire of local water purveyors as to the suitability of their supply for use in hydronic heating systems. If water quality is questionable, a local water treatment expert must be consulted for testing, assessment and, if required, treatment.**

**Alternatively, water or hydronic fluid of known quality can be brought to the site.**

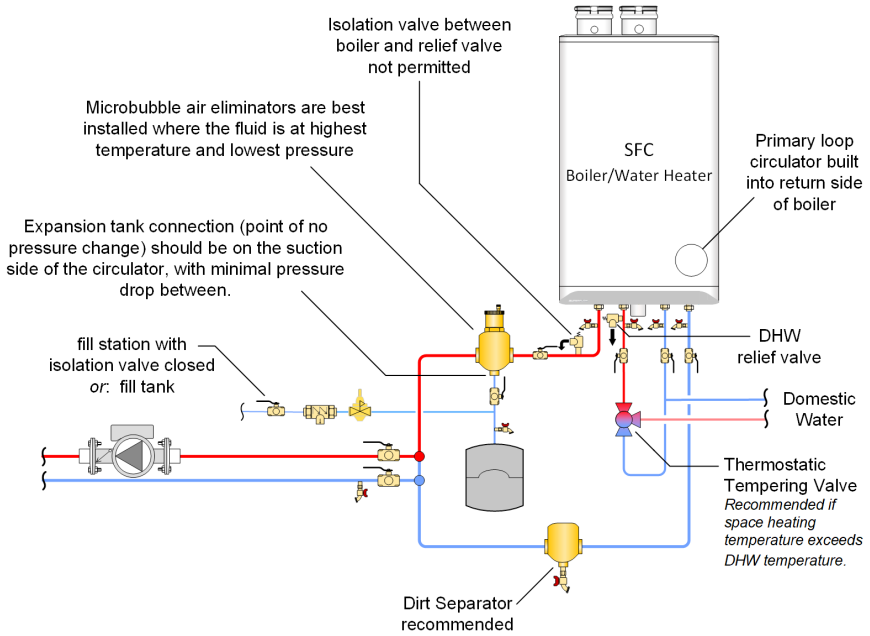


*Figure 22: Boiler trim basic options – concept drawing is only a simple schematic guide*

For best results, use a primary/secondary piping system, with a boiler's loop using 1" piping (see section 1.6.2). The unit comes with the (primary) pump installed and generally provides adequate flow for the unit and primary loop piping only.

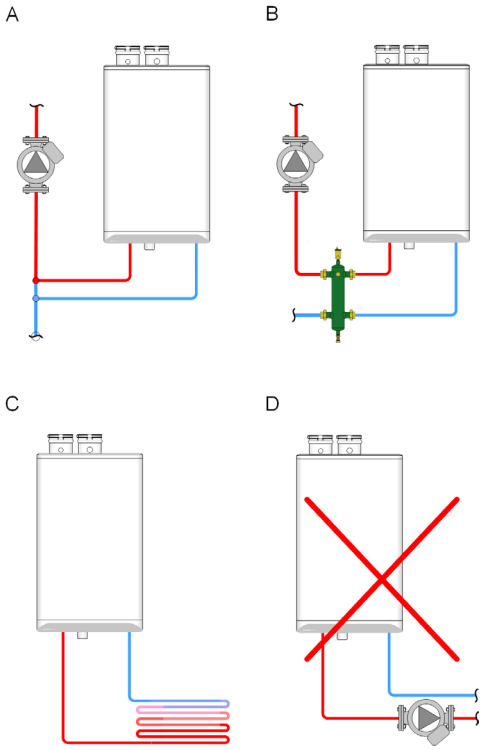


*Figure 23: Permitted and prohibited space heating*

## ⚠ WARNINGS

**- Close fill valve after any addition of water to the system, to reduce risk of water escapement.**

**- Ensure the gas ignition system components are protected from water (dripping, spraying, rain, etc.) during appliance operation and when servicing (pump replacement, condensate trap servicing, control replacement, etc.)**

## ⚠ NOTES

**- The piping system of a hot water unit connected to heating coils located in air handling units where they may be exposed to refrigerated air circulation must be equipped with flow control valves or other automatic means to prevent gravity circulation of the unit's water during the cooling cycle.**

**- The unit, when used in connection with a refrigeration system, must be installed so the chilled medium is piped in parallel with the unit with appropriate valves to prevent the chilled medium from entering the unit.**

Figure 23 illustrates that the SFC series integral space heating pump can be hydraulically separated from the distribution pump by (A) closely-spaced tees, or by (B) a low-loss header. Although best practice is primary/secondary, in some cases (C) the integral pump will be adequate to provide flow through the building heat emitters. The installer / designer must ensure that if the integral pump is used for the space-heating emitters it is powerful enough for system distribution. Avoid (D) where an external pump is placed in series with the integral pump because the external pump runs when the SFC is serving DHW. It will strongly compromise DHW response.

The SFC Series modulating units are designed to supply the heating load with temperatures within the range of 86°F to 194°F (30° to 90°C). Use closely-spaced tees to connect each pumped space heating load to the primary loop. As an option, a hydraulic separator or buffer tank can be used to separate the heating loads from the unit.

Ensure that the pump is rated for the design circulating water temperatures. Some pumps have a minimum water temperature rating above the low temperature potential of the unit. Following installation, confirm the performance by measuring ΔT (under high and low flow conditions) after establishing the correct firing rate.

We recommend water flow after burner shutdown to use legacy heat – this is significant due to the mass of the heat exchanger. The pump is under the control of the unit to allow pump purge after burner shut-down. Default software values will run the unit's pump for 1 minute after the burner shuts down.

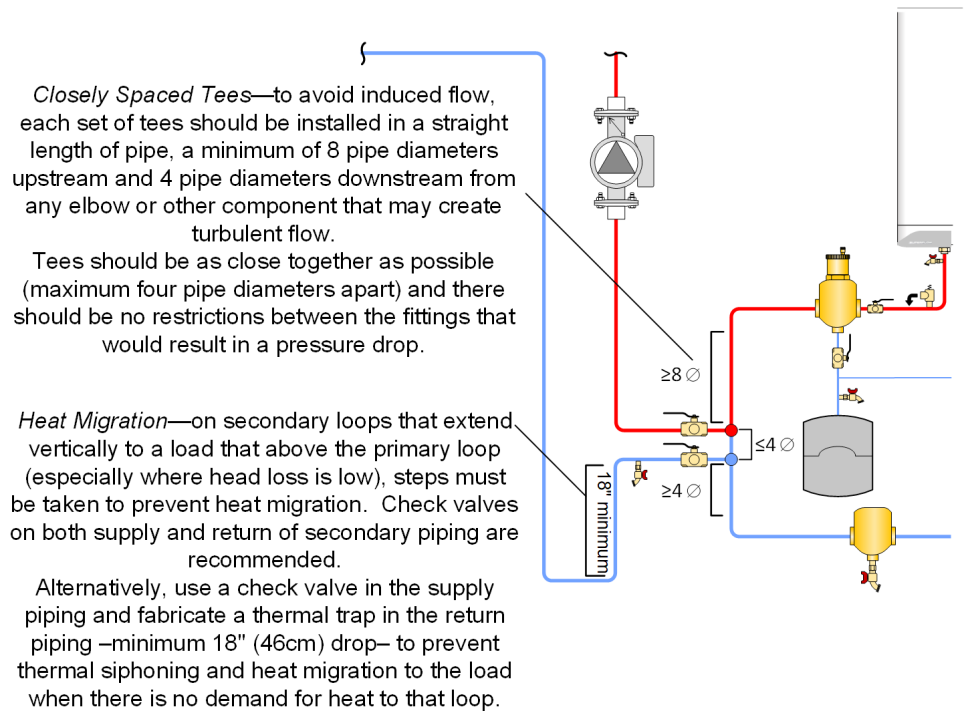


*Figure 24: Basic Primary/Secondary piping with closely-spaced tees concept – concept drawing. This drawing is only a simple schematic guide.*

**⚠ WARNING**

**Water quality has a significant impact on the lifetime and performance of an IBC unit's heat exchanger.**

**Improperly prepared water in a heating circuit may cause damage to the heat exchanger through corrosion or fouling. Repeated or uncontrolled water fills will increase the potential for damage.**

**High levels of dissolved solids or minerals may precipitate out of the fluid onto the hottest part of the heat exchanger, impairing heat transfer and resulting in overheating and premature failure. The amount of solids that may form on the heat exchanger will depend on the degree of hardness and the total water volume in the system. A high water volume system with a low hardness count may cause as much damage as a system with less volume and higher hardness. We recommend treating water to remove all dissolved solids. Other water chemistry allowable limits are as follows:**

- **Acidity pH is to be between 6.5 and 8.5**
- **Chloride is to be less than 125 mg/l**
- **Iron is to be less than 0.3 mg/l**
- **Cu less than 0.1 mg/l**
- **Conductivity is to be less than 400µS/cm (at 25°C)**
- **Hardness is to be 7 Grains or less**

**IMPORTANT: Ensure that these limits are acceptable for the other water-side components in the system.**

Schematics for several piping layouts are provided herein, and additional application drawings showing basic design options are available at **www.ibcboiler.com**. You must conform the piping design to one of the provided configurations to simplify the control application, promote good loads and flow management.

The SFC series modulating units offer exceptional matching of heat generation to radiation. The low minimum firing is better suited to low thermal loads presented in a typical multi-zoned radiation system. However, where individual zones in a heating system have loads under 10,000 Btu/hr, the system will still benefit through use of a buffer tank to ensure a controlled supply temperature, and to prevent short-cycling. Buffering should be added on the secondary piping of the relevant load, to avoid bulking up the thermal mass of the primary piping circuit (and potentially lengthen the duration of the transition from hot to cool loads).

Propylene glycol solution is commonly used in a closed loop where freeze protection is required. Its density is lower than that of water, resulting in lower thermal performance at a given flow and pressure. A solution of propylene glycol to water will require an increased system circulation rate and system head to provide performance equivalent to straight water.

## 1.6.2 Basic Heating Piping Arrangements

### Primary/Secondary Piping - Benefits and installation rules

The primary/secondary configuration:

- Ensures good circulating water flow through the unit irrespective of load or radiation system head.
- Allows flexible ΔT° control in secondary loops.
- Adds to the system's thermal buffering, to assist in handling small loads and temperature transition.

A primary/secondary piping configuration requires an extra pump, independent of any secondary load pumps. The SFC series modulating unit includes a pre-wired integral Primary Pump.

For optimal performance, place pumps on the supply side of secondary loops to facilitate air evacuation. Use pumps with internal check valves to avoid ghost flows and thermal siphoning.

The SFC series units are designed to be piped in a primary/secondary piping arrangement. In some cases the unit can be piped in series with the heating load if the pump is capable of providing the flow and head the system requires. For example, an SFC unit and an air handler can be installed together without the use of an additional pump if the air handler is installed within close proximity of the unit and with properly sized supply and return piping (*see Figure 29*).

If the installation involves small loads, as in typical zoned baseboard heating applications, we recommend using a buffer tank.

To aid in temperature transition from hot to cool loads, place a 3-way mixing valve at the entrance to the cool load (this will also provide floor protection). This type of installation allows immediate circulation of mixed flow into the cool loop.

**WARNING**

**Do not use automotive-type ethylene or other types of automotive glycol antifreeze, or undiluted antifreeze of any kind. This may result in severe unit damage. It is the responsibility of the Installer to ensure that glycol solutions are formulated to inhibit corrosion in hydronic heating systems of mixed materials. Improper mixtures and chemical additives may cause damage to ferrous and non-ferrous components as well as non-metallic, wetted components, normally found in hydronic systems. Ethylene glycol is toxic, and may be prohibited for use by codes applicable to your installation location. For environmental and toxicity reasons, IBC recommends only using non-toxic propylene glycol.**

**NOTE**

**The piping drawings in this manual are simple schematic guides to a successful installation.**

**There are many necessary components not shown, and details such as thermal traps are left out so the drawings have greater clarity.**

**We require that our units be installed by licensed and experienced trades people who are familiar with the applicable local and national codes.**

**System design is to be completed by an experienced hydronic designer or Engineer. It is necessary to carefully read and follow these installation instructions along with the application drawing that fits your system.**

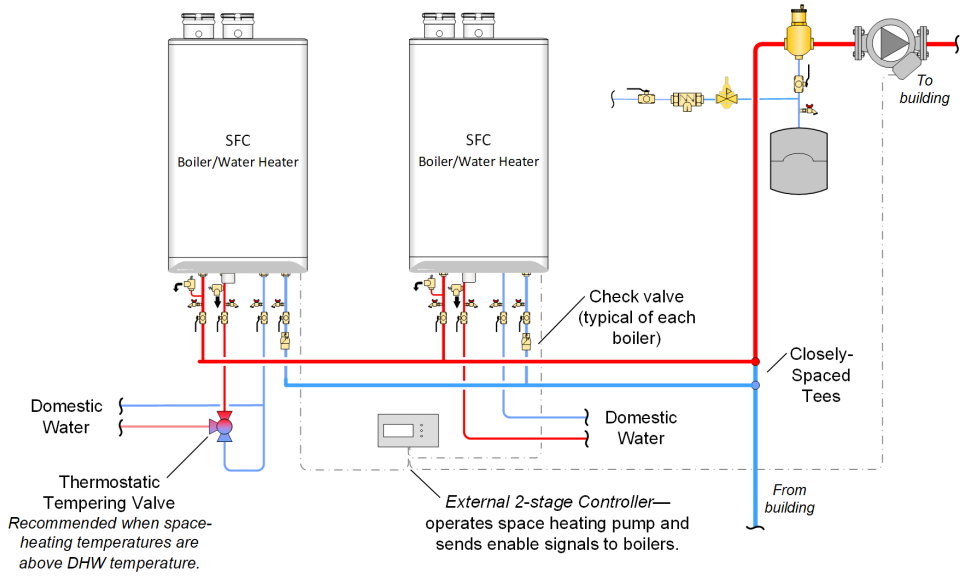


*Figure 25: Multiple boiler piping concept – concept drawing. This drawing is only a simple schematic guide.*

## Multiple unit piping - Benefits and installation rules

Multiple IBC SFC Series units can be installed in a single heating system to provide redundancy, increased output, and greater heating plant turn-down capabilities. Primary/Secondary piping must be used. This approach provides constant head and flow at each unit, regardless of flow variations in the main building loop.

Each unit controls its own pump, turning it off or on when heat is required. This approach saves electricity by reducing the pumping power required as load conditions are reduced.

A multiple unit system can be controlled by installing an external unit staging controller with dry contacts for each unit. These controllers are available from your local heating wholesaler.

Use check valves in each unit's piping to prevent reverse flow when the unit is off.

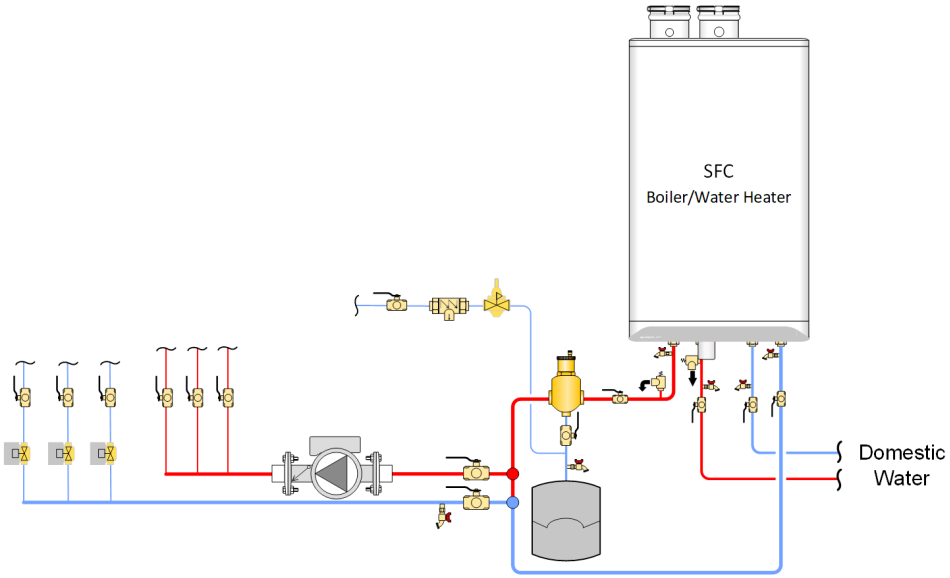


*Figure 26: Typical one temperature space heating piping concept with direct domestic hot water – concept drawing. This drawing is only a simple schematic guide.*

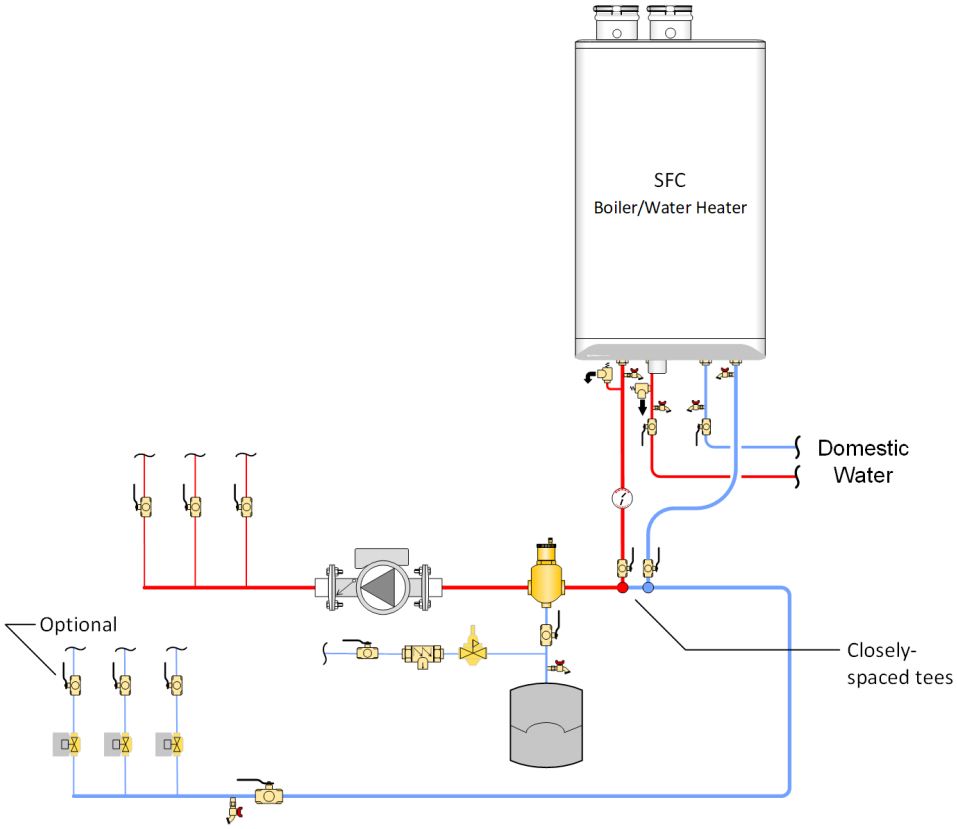


*Figure 27: Space heating piping concept with closely-spaced tees on secondary loop.*

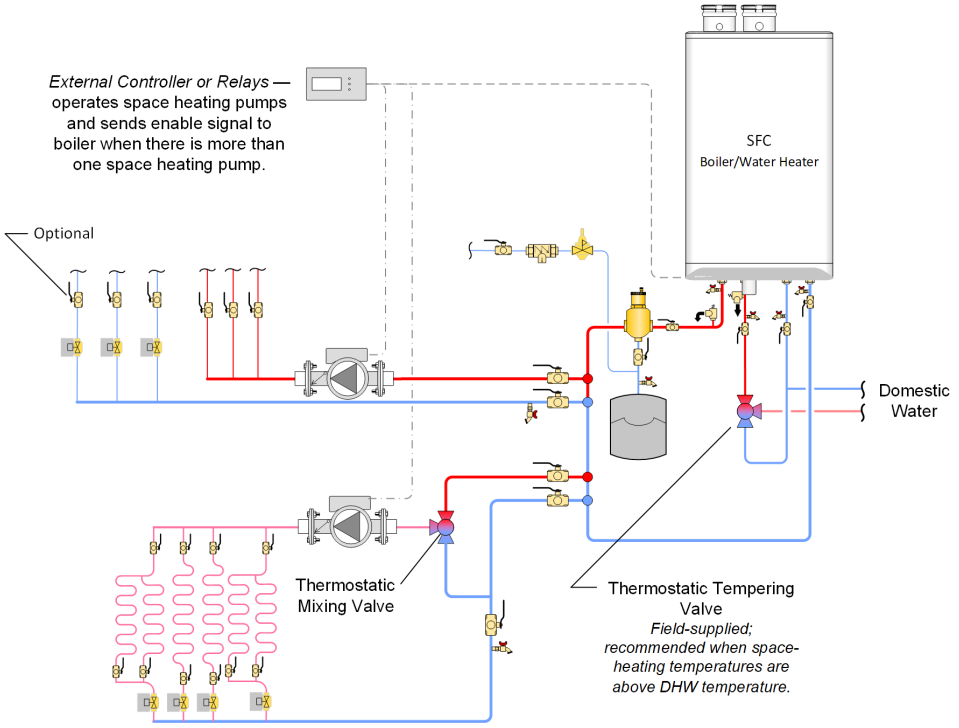


*Figure 28: Typical two temperature space heating piping concept with domestic hot water – concept drawing. This drawing is only a simple schematic guide.*

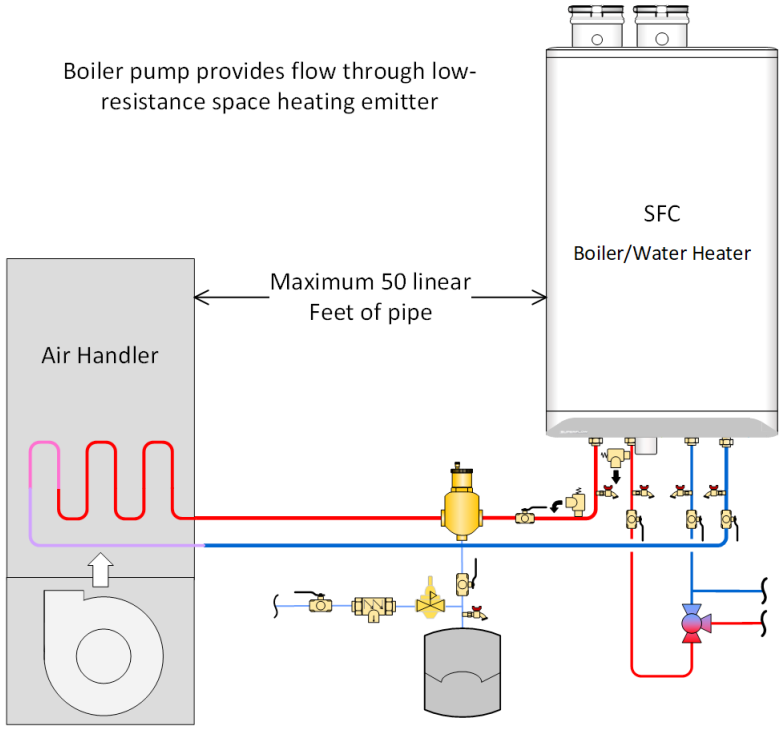


*Figure 29: Air handler and direct domestic hot water – parallel piping for low loss heat emitter concept drawing. This drawing is only a simple schematic guide.*

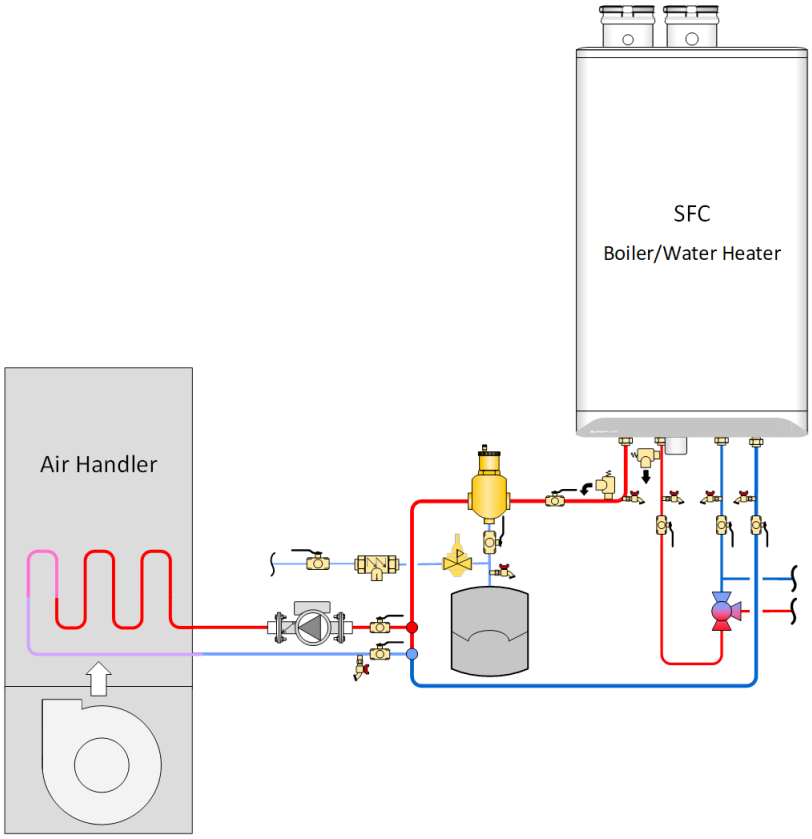


*Figure 30: Air handler and direct domestic hot water – primary/secondary concept drawing. This drawing is only a simple schematic guide.*

# 1.7 DOMESTIC HOT WATER SYSTEM

## WATER HEATER INSTALLATION GUIDELINES

### WARNING

- This unit must be installed in accordance with local codes, if any; if not follow the National Fuel Gas Code, ANSI Z223.1/NFPA 54, or the Natural Gas and Propane Installation Code, CAN/CSA B149.1, as applicable.
- Failure to correctly install and operate this appliance can result in severe personal injury or death.
- The unit shall have a pressure relief valve installed within 6" [152mm] of the DHW HOT outlet connection.
  Refer to the unit's User Manual before operating the relief valve.
- The unit requires a pressure relief valve identified with the ASME V or HV symbol and set to relieve at or below 150psi of domestic water pressure and a minimum relieving capacity of 199,000 Btu/hr with 3/4" NPT threads. For safe operation of the unit, the relief valve must not be removed from its designated point of installation or plugged.
- Read and follow warnings and instructions.

### CAUTION

- Hotter water increases the risk of scald injury. Before changing the temperature setting, see instruction manual.

### ADJUSTABLE TEMPERATURE SETTING

- Touch the panel above the dot twice, then touch the Faucet . Adjust the water temperature with the Plus + and Minus – then touch the Return button to save the changes.

## ⚠ DANGER

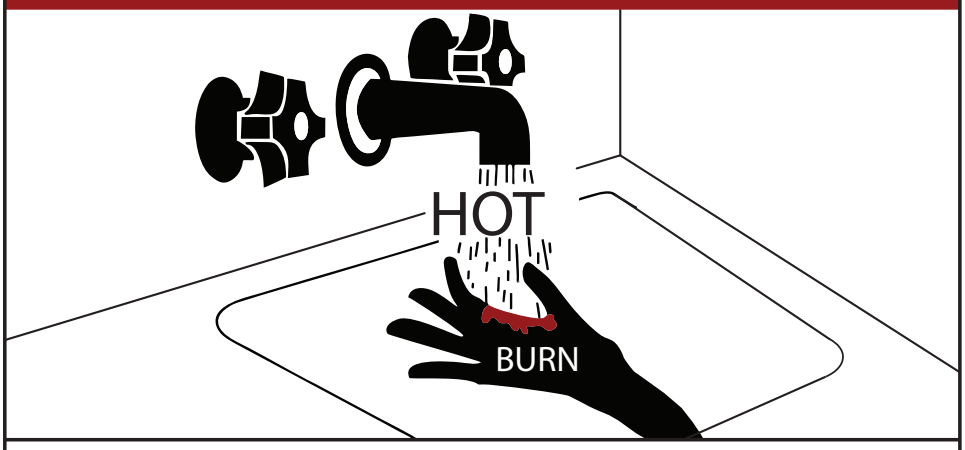


- Water temperature over 125°F (52°C) can cause severe burns instantly or death from scalds.
- Children, disabled, and elderly are at highest risk of being scalded.
- See instruction manual before setting temperature at water heater.
- Feel water before bathing or showering.
- Temperature limiting valves are available, see manual.

**⚠ WARNING**

**HOT WATER CAN SCALD!**

**Water Temperatures over 125°F / 52°C can cause severe burns instantly or death from scalds.**

**Children, disabled, and elderly are at highest risk of being scalded.**

- **Never leave them unattended in or near the shower, bathtub or sink.**
- **Never allow small children to use a not water faucet or draw their own bath.**

**To avoid any potential scald hazard or if codes require specific water temperatures at the hot water faucet, the installer may:**

- **Install a field supplied thermostatic mixing valve at this appliance and ensure it is working properly.**

  **AND**
- **Set the thermostatic mixing valve to the lowest temperature which satisfies your hot water needs.**

**TO AVOID INJURY:**

- **Feel and adjust water temperature before bathing or showering.**
- **Water drained from the system drain valve may be extremely hot.**
- **Make sure all connections are tight.**
- **Direct water flow away from any person.**

**⚠ WARNINGS**

**- Bacteria growth can develop in domestic hot water tanks and indirect water heaters if the minimum water temperature is not set high enough to prevent its growth.**

**A potentially hazardous situation, which can cause serious injury or death, can exist if the un-used domestic water connections are capped off. The unused domestic water connections are meant to be left open if not used to allow for the air in the coil to expand and contract as the unit is in operation.**

## 1.7.1 Domestic Hot Water System

The SFC series units have an independent piping circuit for efficiently generating Domestic Hot Water. When a faucet is opened to draw hot water, water flow is detected with a flow sensor and the SFC Series unit fires up to begin generating domestic hot water. Due to the unique design of the unit's heat exchanger, the unit can fire with either no water in the space heating circuit or without flow of water if pressurized with the domestic heating system water.

The heat exchanger has two separate copper water passageways encased in the aluminum heat transfer block. Each copper passageway is completely isolated from the other to eliminate cross contamination in the event of a leak. This heat exchanger complies with the double wall heat exchanger requirements in many regional jurisdictions.

The unique design of the cast aluminum heat exchanger acts as a heat buffer, eliminating the cold sandwich effect when turning on and off the water repeatedly.

While the SFC series unit is less susceptible to lime scale build-up than other units on the market, always consider water quality in the installation. We strongly recommend treating hard water and adjusting the pH between 6.5 and 8.5. As a reference, *Table 6* represents some of the drinking water guidelines published by the US EPA. Consult a water treatment adviser in your area to assess your local needs. Proper water treatment will aid in the longevity of the unit and ensure maximum efficiencies.

| DESCRIPTION | MAX | MIN |
|---|---|---|
| Water Pressure | 150 psi | 40 psi |
| Programmable water temperature | 149°F (65°C) | 104°F (40°C) |
| Minimum Flow Rate to Activate DHW Sensor | N/A | 0.5 GPM |
| Acceptable pH range | 8.5 pH | 6.5 pH |
| Total Dissolved Solids | 500 mg/L | |
| Total Hardness | 200 mg/L 11.68 gr/gal | |
| Aluminum | 0.05 to 0.2 mg/L | |
| Chlorides | 250 mg/L | |
| Copper | 1.0 mg/L | |
| Iron | 0.3 mg/L | |
| Manganese | 0.05 mg/L | |
| Zinc | 5 mg/L | |

*Table 6: Domestic Water Quality Guidelines*

## 1.7.2 Domestic Hot Water Piping

The domestic water piping connections are located at the bottom of the unit, *see Figure 1b.* The connections are 1/2" male NPT threads. The cold water inlet is on the right side and the hot water outlet is on the left side.

A pressure relief valve must be installed:

- With a maximum pressure setting of 150PSI and rated for a minimum capacity of not less than the rated input of the unit (NOT supplied with the unit) on the domestic hot water outlet piping within 6" of the unit.
- Between the unit's outlet and any isolation valve to ensure the pressure relief valve cannot be isolated by closing a valve. We recommend a valve kit designed for this purpose to reduce installation time and to reduce the space required.

**NOTE**

**See Domestic Hot Water Warnings on page 1-29.**

If required by local code, you can install a field-supplied domestic hot water thermostatic mixing valve on the outlet of the SFC Series unit to prevent excessively hot water from reaching a faucet if the unit is used in a high temperature heating system. If the unit is being used to heat a low temperature heating system like a radiant floor at temperatures at or below 120°F/49°C then the thermostatic mixing valve may not be needed. **Do not cap off the hot and cold piping connections if they are not being used.**

The SFC series units can be connected to the pressurized 1/2" or larger domestic cold water supply piping and the domestic hot water piping in the home. The minimum domestic water pressure required is 40PSI and recommended to be 50PSI or higher. Generating domestic hot water with a water pressure lower than 40PSI reduces the amount of hot water generated and increases the risk of scaling in the heat exchanger.

The domestic water piping must be installed with isolation valves and flushing taps installed on both the cold and hot domestic connections.

Thermal expansion of the water in the domestic hot water piping and unit can cause excessive pressures to build in the piping system. This can cause the pressure relief valve to discharge on a regular basis. This condition must be prevented with the installation of a properly sized and installed domestic water expansion tank or other device designed for the purpose.

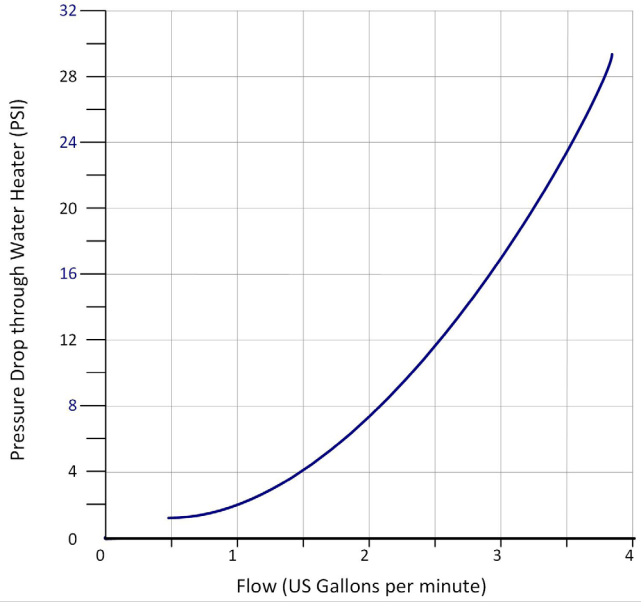


*Table 7: Water Heater Pressure Drop*

A filter is required where contanminants are present in the supply water (see A in Figure 31).

**⚠ CAUTION**

**The *field supplied* thermostatic mixing valve may be installed on the direct domestic hot water piping connections at the unit or at the outlet of a domestic hot water storage tank if using the domestic hot water function. Failure to install the thermostatic mixing valve may result in a hazardous situation which can cause serious injury or death. *See section 1.7.2.***

| DOMESTIC HOT WATER DELIVERY | |
|---|---|
| **@ 67°F / 37.2°C temperature rise** | |
| SFC-99 | 2.66 GPM |
| SFC-125 | 3.35 GPM |

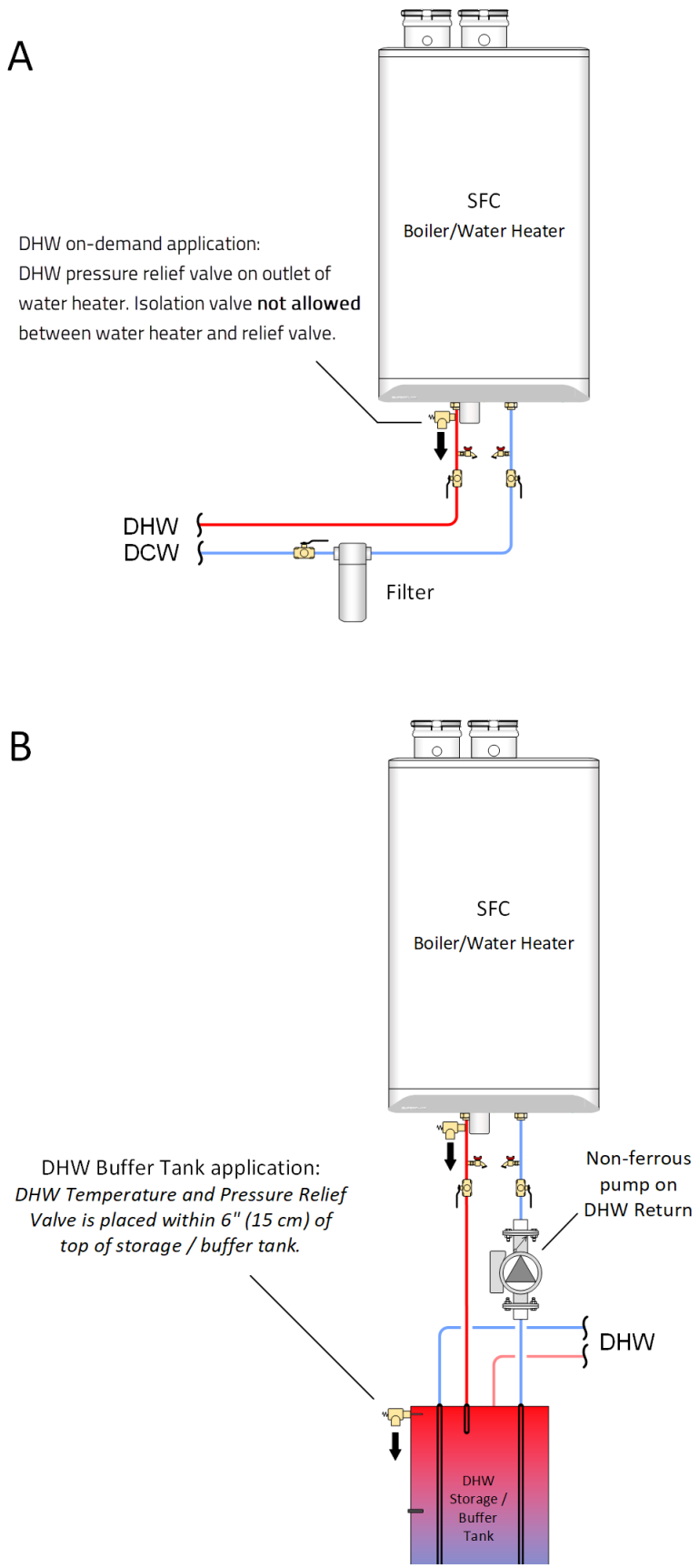


*Figure 31: Tankless DHW Piping Options – concept drawing. This drawing is only a simple schematic guide.*

# 1.8 GAS PIPING

**⚠ WARNING**

**This appliance can burn either natural gas or propane. Refer to section 3.3 for further instruction. If converting an appliance from one fuel to another, you must order a conversion kit prior to the conversion. Install the conversion kit according to the detailed instructions supplied with the kit. Failure to perform the required fuel conversion correctly can result in serious injury or death.**

**⚠ NOTE**

**It is essential to check gas supply pressure to each unit with a manometer or other high-quality precision measuring device. Pressure should be monitored before firing the unit, when the regulator is in a "lock-up" condition and during operation, throughout the unit's full modulation range.**

**Pay special attention to retrofit situations where existing regulators may have an over-sized orifice and/or worn seats, causing pressure "creep" and high lock up pressures.**

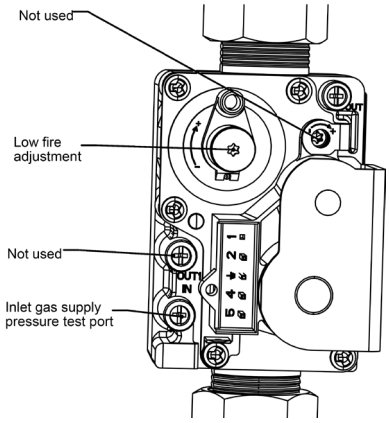


*Figure 32: Gas Valve*

The unit must have an inlet gas pressure of at least 5.0" w.c. for natural gas and propane. For either fuel, the inlet pressure shall be no greater than 14.0" w.c. Confirm this pressure range is available with your local gas supplier.

The inlet gas connection of the unit's gas valve is 1/2" NPT (male).

Adequate gas supply piping must be provided with no smaller than 1/2" Iron Pipe Size (e.g. Iron Pipe Size (IPS) and a 1" w.c. pressure drop used, in accordance with the following chart:

| MODEL | 1/2" IPS | 3/4" IPS | 1" IPS |
|---|---|---|---|
| SFC Series (Natural Gas) | 20' | 70' | 200' |
| SFC Series (Propane) | 50' | 200' | 600' |

*Table 8: Maximum Pipe Length (ft) – SFC series*

Gas piping must have a sediment trap ahead of the unit's gas valve *(see Figure 33).* A manual shutoff valve must be located outside the unit, in accordance with local codes/standards. All threaded joints in gas piping should be made with an approved piping compound resistant to the action of natural gas/propane. Use proper hangers to support gas supply piping as per applicable codes.

The unit must be isolated from the gas supply piping system by closing, disconnecting and capping its individual manual shutoff valve during any pressure testing of the gas supply piping system at test pressures equal to or greater than 1/2 psi (3.5 kPa). Dissipate test pressure prior to reconnecting.

The gas valve is provided with pressure taps to measure gas pressure upstream (supply pressure) and downstream (manifold pressure) of the gas valve *(see Figure 32).* Note that manifold pressure varies slightly in accordance with firing rates with the modulating series units, but will always be close to 0" w.c.

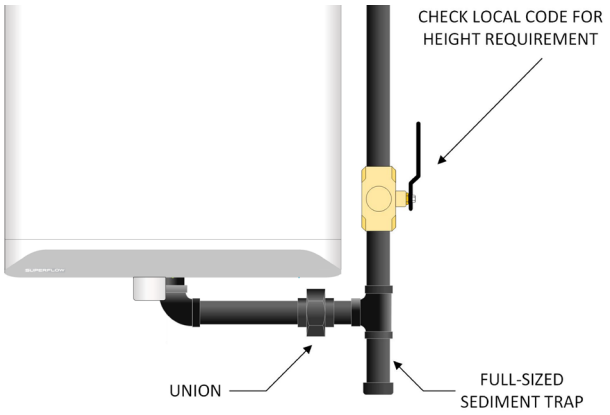


*Figure 33: Gas Piping*

**⚠ WARNING**

**Do not apply power to any connection point on the controllers terminal strips. A hazardous situation could occur resulting in possible serious injury or death.**

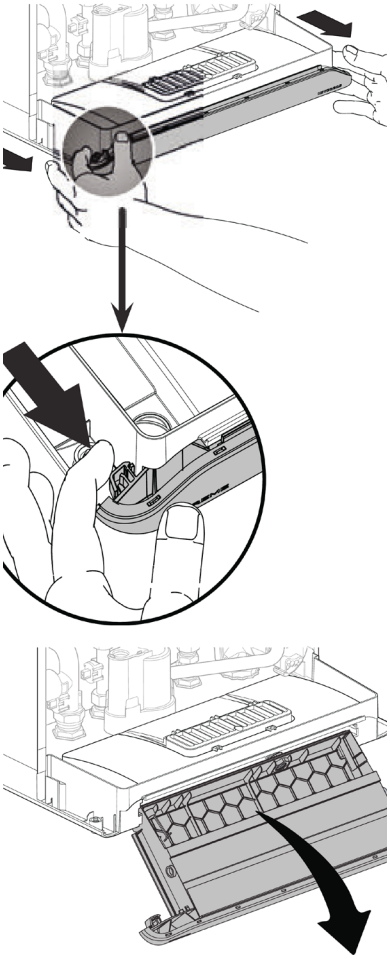

*Figure 34: Pullling out the tray*

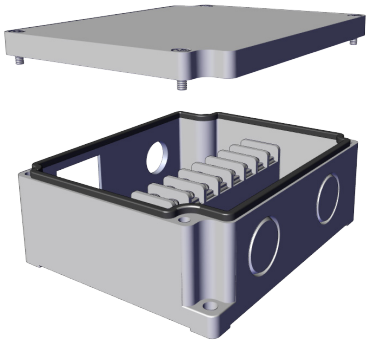

*Figure 35: Junction Box*

### Removing the cover

To remove the cover, unscrew the two 5mm hex bolts on the undersides of the front corners. Lift the cover up firmly.

# 1.9 ELECTRICAL CONNECTIONS

Electrical wiring to the unit (including grounding) must conform to local electrical codes and/or National Electrical Code, ANS/NFPA No. 70 – latest edition, or The Canadian Electrical Code, C22.1 - Part 1.

If using an external electrical source, the unit, when installed, must be electrically bonded to ground in accordance with the requirements of the authority having jurisdiction or, in the absence of such requirements, with the *National Electrical Code, ANSI/NFPA 70, and/or the Canadian Electrical Code Part I, CSA C22.1, Electrical Code.*

## 1.9.1 120VAC Line Voltage Hook-up

*(Refer to Section 6.2.Wiring Diagram on page 6-5).* Connect the unit to the grid power, using the supplied appliance plug in a separate, fused circuit and on/off switch within sight of the unit.

The unit is equipped with 3 x 1/2" electrical knock-outs for control wiring located behind the power supply terminal strip.

The SFC series units include a factory installed and pre-wired pump. The pump may not be able to supply adequate flow for the heat emitter circuits. A system heating pump switched through a separate relay or control box may be needed.

**Field Wiring Junction box**

The unit ships with an optional field-wiring junction box. This box provides wiring connections for a space-heating pump, a DHW pump, and an outlet for unit power. A certified harness from the wiring box connects to the movable controller tray. You do not require a junction box if: 1. the unit's integral pump provides adequate flow through the space-heating heat emitters *and* 2. there is no DHW tank.

## NOTES

**- The IBC unit (like any modern appliance that contains electronic equipment), must have a "clean" power supply, and can be disabled by power surges and spikes, lightning strikes and other forms of severe electrical "noise". Power conditioning equipment (surge protectors, APC or UPS devices) may be required in areas where power quality is suspect.**

**- The IBC control typically uses a true dry contact closure as a call for heat. A signal from an Open Therm device can also be used. Thermostats and other devices that use a "Triac" output cannot be used as a call for heat without the installation of an intervening relay with dry contacts to connect to the IBC terminal strip.**

**- A hot water unit installed above radiation level or as required by the Authority Having Jurisdiction, must be provided with a low water cut-off device at the time of unit installation. If a low water cut-off is not factory installed, instructions shall be provided for the installation and wiring of a low water cut-off.**

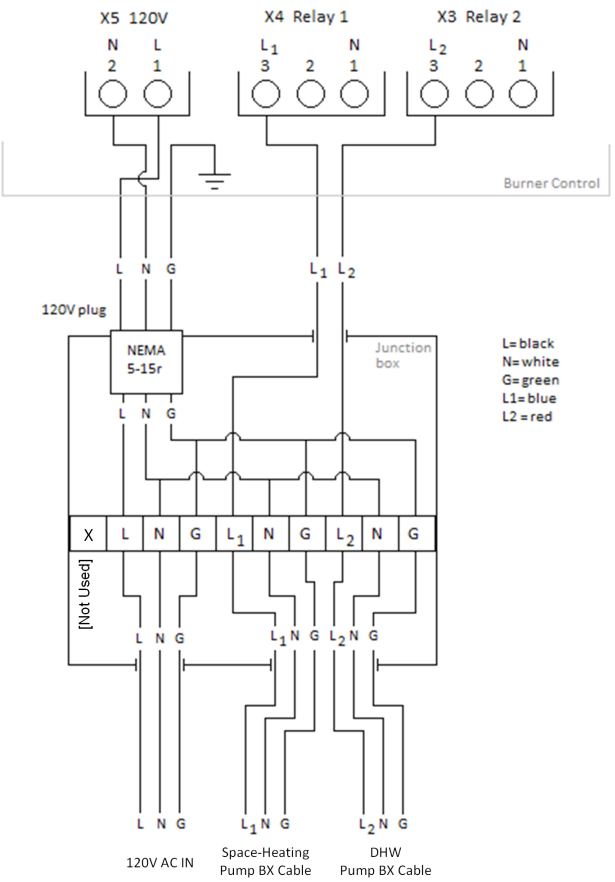


*Figure 36: Junction box schematic*

To install an external junction box to supply power and access to up to two pump relays:

1. Pull out the controller as shown in Figure 34.
2. At the back of the tray, knock out the hole nearest to the power cord using a flathead screwdriver.
3. Feed the junction box cable through the hole and secure to the tray with the connector nut.
4. Connect the blue wire to the X4 terminal, position 3.
5. Connect the red wire to the X3 terminal, position 3.
6. Screw the junction box to the wall within six feet of the tray.
   - Allow clearance for plug use.
   - Allow wire enough slack for easy removal of the tray.
7. Drill out both holes in the junction box.
8. Bring AC Power to terminals labelled **Power Inlet**.
9. Wire the pump(s) to the junction box.
   - Wire the space heating pump to terminals labeled **Relay 1**.
   - Wire the DHW pump to terminals labeled **Relay 2**.

   If using both relays, wire the pumps to the box with a duplex BX connector.
10. Install the junction box cover.

**Note:** If the junction box is installed AC power must be supplied to the SFC series boiler through the junction box. Do not plug the unit in elsewhere.

### External probe type low water cutoff device

You can link a field-supplied, external safety device to the unit by connecting the safety device in series with the unit's 120V main power supply.

If the unit is being used only as a direct domestic hot water unit an external low water cut-off device is not required. However, if required, we recommend using an electronic probe style device:

- Install the probe type low water cut-off device with a Tee connection at a level above the top of the unit.
- Wire the probe type low water cut-off device in series with the 120Vac power supply, so that when the device trips on a low water condition the power supply to the unit is interrupted.

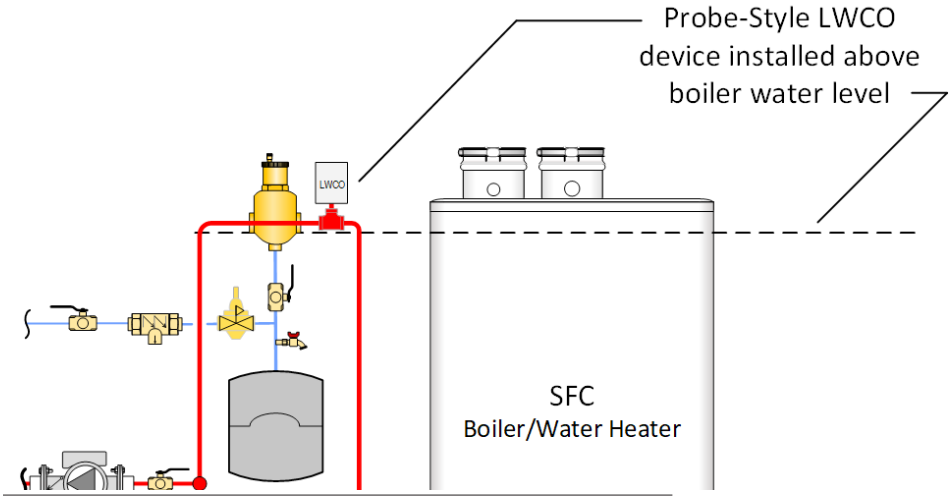


*Figure 37: External Probe Type Low Water Cutoff Device*

## 1.9.2 Power Quality and Electrical Protection

In areas of unreliable power, appropriate surge protectors and / or power conditioning equipment should be installed to protect the unit.

## 1.9.3 Zone Valve and Zone Pump Connections

Zoning can be accomplished with either zone pumps or zone valves. If zoning by multiple pumps, we recommend using an external pump module.

Zone valve end switches can be wired together in parallel, and connected to X13 terminals 1 and 2. Do not apply power to the X13 terminal strip. Alternatively, you can connect the zone valves and thermostats to a zoning panel control system (available from your local heating wholesaler).

You can connect zone pumps to the unit with a zone pump control, available from your local heating wholesaler.

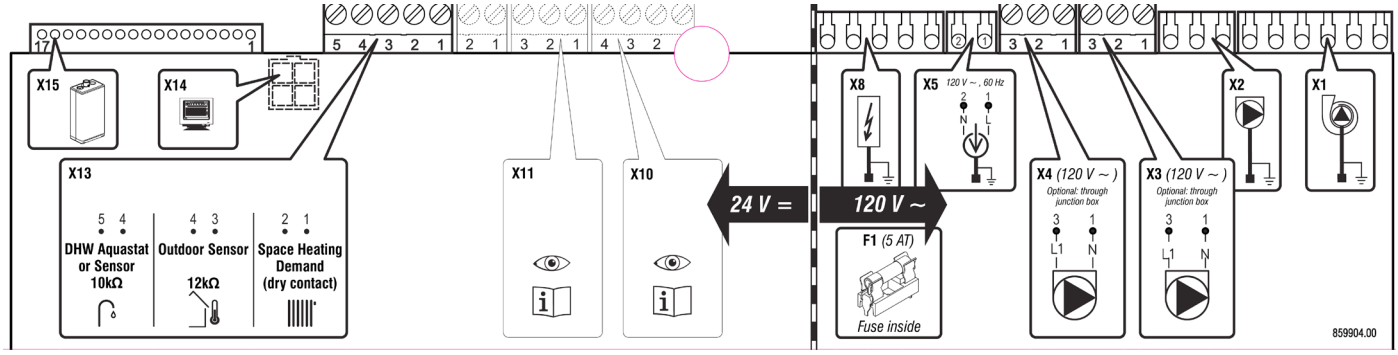


*Figure 38: Terminal strip for connection of the DHW Aquastat (optional), thermostat or end switch(es) (mandatory), outdoor sensor (optional)*

## 1.9.4 Thermostat / Sensor Wiring

A thermostat from a single zone heating system can be connected directly to the controller's X13 terminals 1 and 2. Do not apply power to the X13 terminal strip.

An outdoor sensor is not required for the unit to operate. If an outdoor sensor is not connected, the unit will operate as a set point unit and operate at its design supply temperature.

If outdoor reset functionality and the summer shut-down feature are desired connect the supplied Outdoor sensor to X13 terminals 3 and 4. The outdoor sensor is a 12KΩ thermistor type sensor.

The sensor should be installed:

- On the exterior of the building on the north side.
- So that it is not effected by any heat sources from the building such as a dryer or exhaust fan outlet, relief air or combustion air grill above a window or door, or mounted directly under a deck or soffit overhang.

DHW Aquastat or 10KΩ sensor can be connected to the controller's X13 terminals 4 and 5. Do not apply power to the X13 terminal strip.

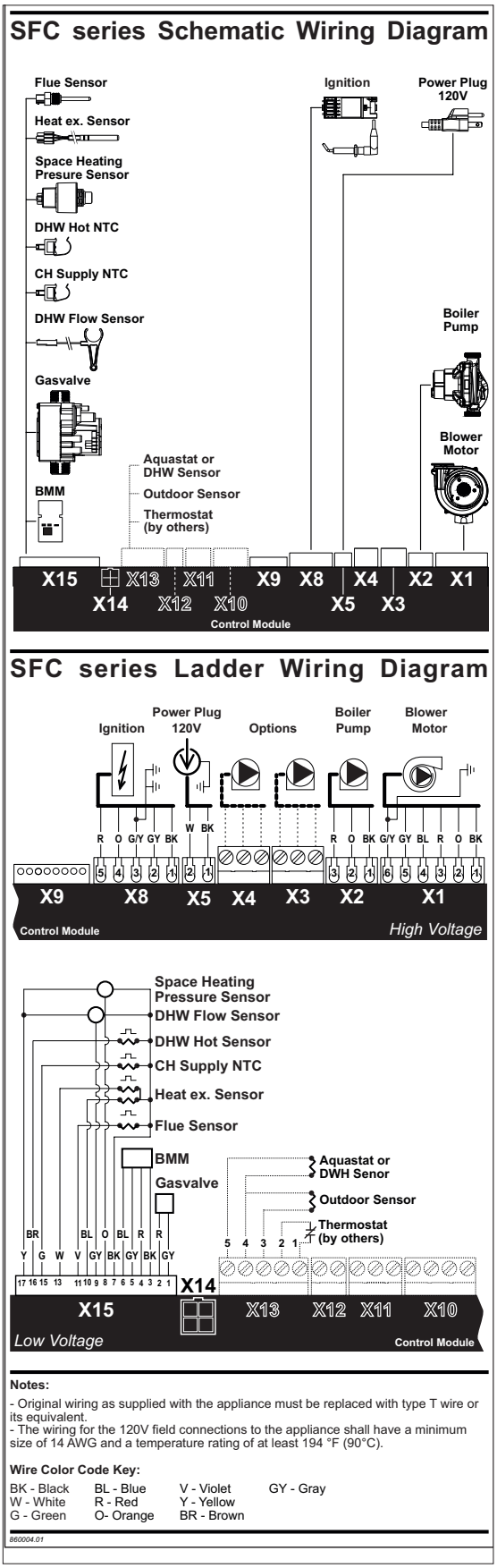


**Notes:**

- Original wiring as supplied with the appliance must be replaced with type T wire or its equivalent.
- The wiring for the 120V field connections to the appliance shall have a minimum size of 14 AWG and a temperature rating of at least 194 °F (90°C).

**Wire Color Code Key:**

| | | | |
|---|---|---|---|
| BK - Black | BL - Blue | V - Violet | GY - Gray |
| W - White | R - Red | Y - Yellow | |
| G - Green | O- Orange | BR - Brown | |

860004.01

*Figure 39: Electrical Wiring Connections (full page ladder diagram at back of this manual)*

# 2.0 UNIT SYSTEM OPERATION

## 2.1 GENERAL

The SFC series modulating condensing units are designed to heat both your indoor space and your domestic hot water. The unit's unique heat exchanger design incorporates separate copper waterways for space heating and for domestic hot water generation.

With the installation of the provided outdoor sensor, the unit's controller can provide outdoor reset control for the space heating load. The built-in control provides a set point for water temperature for the domestic load. Installing the outdoor sensor is optional, but recommended for higher efficiency.

Alternatively, the controller can provide a set-point water temperature for the space heating load.

The unit is equipped with a factory-installed pump. The pump is pre-wired and will operate with any call for space heating and when heating an IBC indirect water heater. The pump will not operate with a call for domestic hot water using the unit's internal domestic hot water tankless coil.

The unit pump operates for 10 seconds every 24 hours to prevent it from seizing. The pump is energized 24 hours after the last call for heat and every 24 hours after that until the next call for heat.

The SFC series unit can generate domestic hot water in several ways. The SFC series unit can be used as a tankless water heater, with or without a storage tank, and also with an IBC indirect water heater.

The unit is equipped with an electronic unit controller that ignites the burner and continuously monitors the flame throughout each call for heat. The control also displays the current operating conditions of the unit and any error messages should a problem occur.

The unit's controller also provides frost protection. When the unit's heat exchanger temperature becomes too low the burner switches on to keep the heat exchanger warm. Ensure that the condensate trap is protected from freezing. The unit must be installed indoors.

**DANGER**

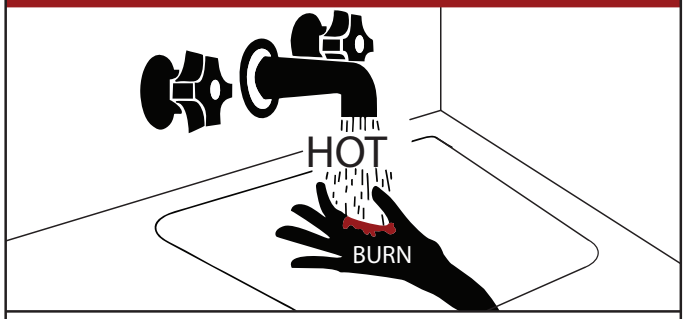


- Water temperature over 125°F (52°C) can cause severe burns instantly or death from scalds.
- Children, disabled, and elderly are at highest risk of being scalded.
- See instruction manual before setting temperature at water heater.
- Feel water before bathing or showering.
- Temperature limiting valves are available, see manual.

# 2.2 CONTROL

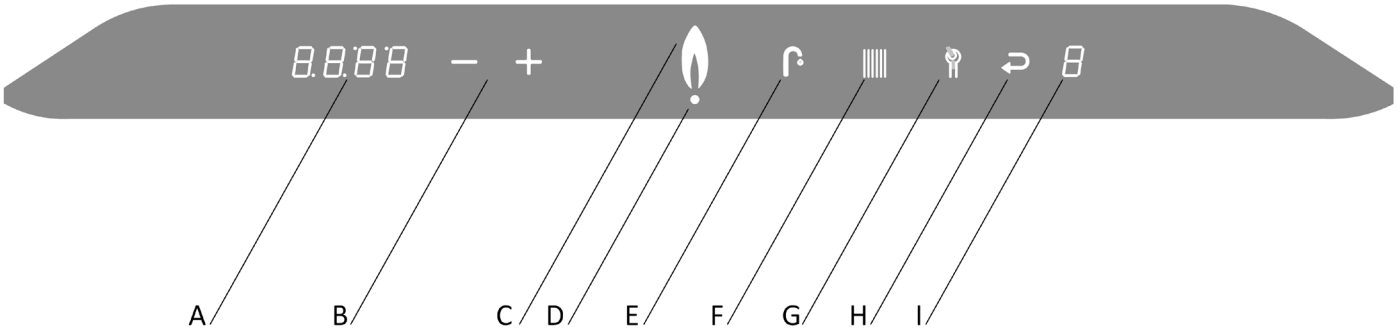


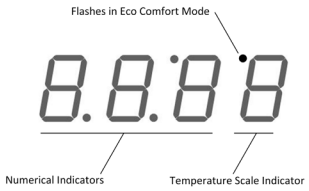


| | ICON | FUNCTION |
|---|---|---|
| A | Numerical Display | Main Display |
| B | Plus & Minus | Temperature Adjustment |
| C | Flame | Burner ON Indicator |
| D | Dot | Power ON Indicator |
| E | Faucet | DHW Indicator |
| F | Radiator | Heating Indicator |
| G | Wrench | Service / Reset |
| H | Return Arrow | Enter / Save |
| I | Numerical Display | Service Display |

*Table 9: Controller Indicators and Touch Pad*

# 2.3 INSTALLER INTERFACE

## 2.3.1 Turning Appliance ON/OFF

To turn on the unit, touch the area above the dot for 2 seconds. Now only the dot is illuminated.

To turn off the unit, touch the area above the dot for 2 seconds. A dash appears to the right and the pressure psi displays to the left.

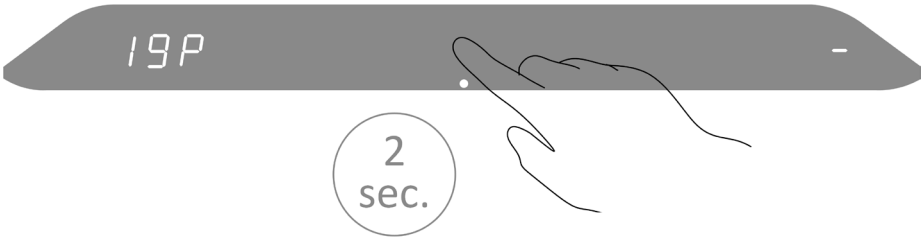

## 2.3.2 Programming Mode

There are two parameters available in the User Setup Menu. *See also separate SFC Controller manual.*

The controller has four levels: User Menu, Installer Menu (code 15), a Master Installer Menu (code 20), RF Menu (code 30). *See separate publication SFC controller manual for details.*

**Adjusting the Space Heating Water Temperature**

To access the main menu:

1. Touch the area above the dot twice.
2. Touch the Space Heating button.

**3.** To change the value, touch the Plus or Minus buttons.

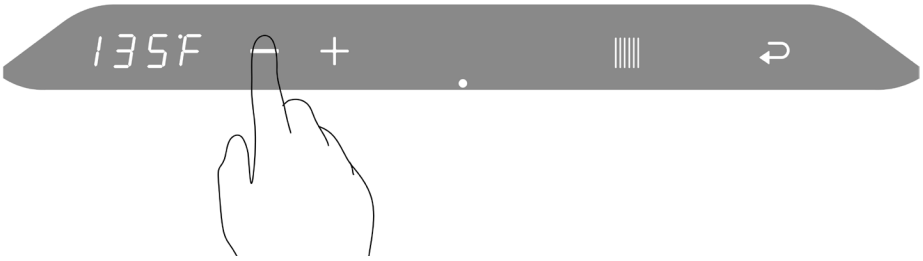


**4.** To save the changes, touch the Return button.

“P” to the right of the screen indicates that the changes have been saved.

**⚠ NOTE**

**The domestic hot water thermostat is adjusted to its lowest temperature position when shipped from the factory. It's recommended to set the domestic hot water thermostat to 120°F/49°C as an initial setting and further adjust as required. For energy efficient operation, this setting should be set as low as practical for the consumer's needs.**

**Adjusting the Domestic Hot Water Temperature**

To adjust the DHW:

1. Touch the area above the dot.
2. Touch the Faucet button.

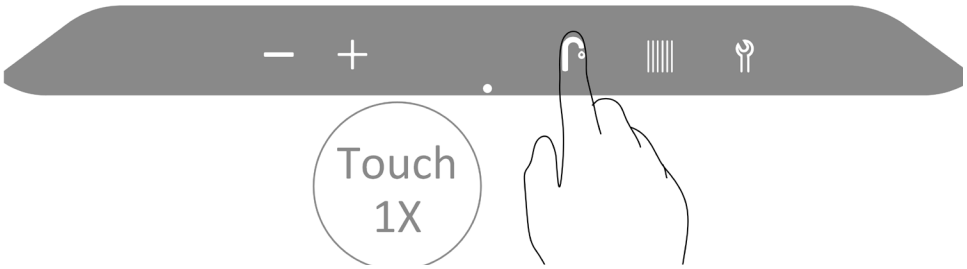


The tankless domestic hot water temperature target appears on the main display.

3. To change the DHW temperature target, touch the Plus or Minus buttons.

4. **To:**
   - Save the changes, touch the Return button.
   - Exit without saving the changes, touch the area above the.

# 2.4 TANKLESS DOMESTIC HOT WATER MODES

## 2.4.1 Tankless Domestic Hot Water - Standard and ECO Comfort Modes

**Standard Mode (OFF):** The unit will respond to a call for domestic hot water as a priority over the space heating demand. When the domestic hot water demand is satisfied the unit will return to the space heating load if the load is still calling. The water heater's heat exchanger will not maintain its domestic hot water temperature between demands for hot water.

**Comfort Mode (ON):** The water heater's heat exchanger is maintained at the DHW temperature.

**ECO Comfort Mode (ECO):** This mode operates like the Comfort Mode but has the added advantage of learning when the domestic hot water is used. During the low use periods, the heat exchanger is allowed to cool.

To switch between the 3 modes:

1. Touch the area above the dot.

2. Touch the Faucet button twice.

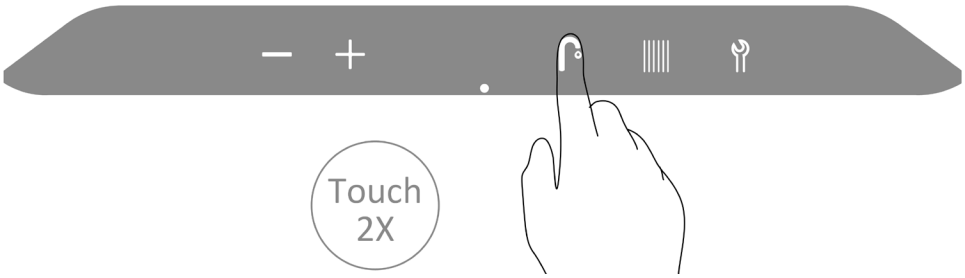


3. Select the Plus or Minus buttons.

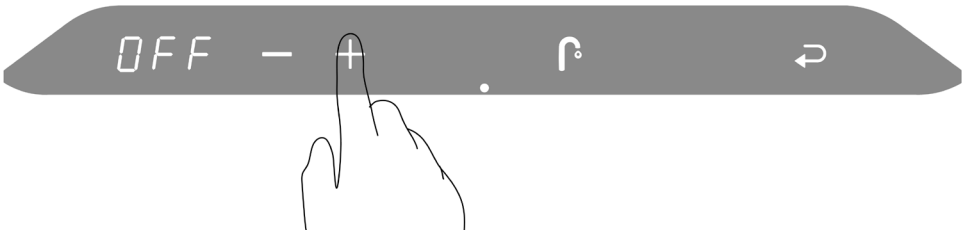


4. **To:**

- Save the changes, touch the Return button.
- Exit without saving the changes, touch the area above the dot.

**⚠ NOTE**

**The correct 10KΩ temperature sensor (or aquastat) must be used to operate the indirect water heater properly. If the incorrect sensor is used the domestic hot water may overheat causing serious injury or death.**

# 2.5 ADDING DOMESTIC HOT WATER STORAGE

## 2.5.1 Tankless Domestic Hot Water with a Storage Tank

The SFC series unit has the ability to connect a domestic hot water storage tank to the unit to provide larger volumes of domestic hot water during peak demands.

The storage tank is piped to the unit's domestic hot and cold water piping connections *(see B in Figure 31).* You must install a bronze or stainless steel pump to circulate water from the storage tank through the unit's domestic hot water coil. *The pump and the tank aquastat can be wired directly to the unit's control for ease of installation.*

In this case, you can wire the pump and aquastat together without connecting to the unit. When the line-voltage aquastat energizes the pump, the the flow sensor detects the flow of domestic water and activates the water heater to heat to its programmed temperature. The unit will switch off its internal pump.

## 2.5.2 Domestic Hot Water with an Indirect Tank Heater

You can connect the SFC series unit to an indirect tank. Connect the indirect tank's supply and return connections to the unit's primary loop using a hydraulic separator or closely-spaced tees. Properly sized piping must be installed. A properly sized pump must also be installed between the unit and the indirect tank.

# 2.6 SPACE HEATING

## 2.6.1 Overview

The SFC series unit is designed to be installed in a primary/secondary type piping system. The unit comes complete with a factory-installed unit pump. The pump is designed to circulate heating system water through the unit's heat exchanger and primary loop piping only. The building's distribution piping system may require a dedicated pump or pumps to circulate space heating water through the heating system. The unit can operate a separate building pump (120V 1.0 AMP max).

There are various ways to zone a space heating system. Local wholesalers sell control packages that offer easy methods to connect the zoning system to the unit. See example piping and electrical drawings at **www.ibcboiler.com.**

The unit supplies heat to the space using an outdoor reset line. With an outdoor sensor installed, the unit automatically adjusts its space heating water temperature based on the parameters programmed into the unit. *See separate SFB/SFC controller manual for parameter information.* If the Outdoor sensor is not installed, the unit uses the temperature set in the "User Set Up" menu "Boiler Supply Temperature" to supply hot water to the space heating system.

**⚠ NOTE**

**The unit is equipped with a frost protection feature. This feature operates the unit's pump and the burner to help protect the unit from freezing. If the unit is in a hard lock-out condition the burner will not operate, but the unit's pump will operate. IBC is not responsible for damages to the unit, and/or related components, nor property damages that may result from freezing conditions.**

# 2.7 SEQUENCE OF OPERATION

The unit operates in a similar way for both a space heating and a domestic hot water call for heat. When the unit is powered up the controller enters a self-diagnostic mode, and displays "2" in the Service Display.

The sequence of operation is as follows:

1. The unit receives a call for heat from closing terminals X13.1 and X13.2 (24 volts section). The unit can also receive a call from domestic hot water heating from the internal flow sensor, or from a 10KΩ sensor or aquastat (X13.4 and X13.5 in 24V terminal).
2. The unit does a safety check and energizes the fan for a pre-purge (*Service Display = 3*).
3. Once the 5-second pre-purge is compete, the unit enters a 5-second trial for ignition (*Service Display = 4*). If the unit fails to ignite, the unit will complete a 5-second inter-purge then another 5-second trial for ignition. This is repeated 4 times before a hard lock-out occurs. The Return button must be pressed to reset the controller and to allow for another attempt.
4. Once the burner is lit and flame has been proven the unit operates as it is programmed (*Service Display =* for space heating or for domestic hot water).
5. If the unit reaches its target temperature and there is still a call for heat or hot water the burner will turn off (integral pump runs unless call is on-demand DHW). (*Service Display = 1*)
6. After the call for heat is satisfied, the unit's pump will operate for an adjustable amount of time (*Service Display = 0*).
7. If the burner is on to maintain the heat exchanger temperature for DHW Comfort mode (*Service Display = 7*).
8. If the burner is on for frost protection (*Service Display = 9*).

| MAIN DISPLAY | LIT DISPLAY | DESCRIPTION |
|---|---|---|
| [pressure] P | - | The unit is OFF. Press the space above the white button to turn on the unit. |
| (blank) | (blank) | No Call for Heat - Standby |
| XXX | 0 | Unit pump running – pump post purge |
| XXX | 1 | Unit water temperature reached target – unit pump is energized, call for heat still present |
| XXX | 2 | Self-test – When power is applied to the unit the controller enters a self diagnostic mode for 5 seconds |
| XXX | 3 | Fan Pre-purge , Inter-purge and Post-purge |
| XXX | 4 | Trial for Ignition and Flame Proving |
| XXX | + | Heating – Space Heating |
| XXX | + | Heating – DHW |
| XXX | 7 | Burner on for Comfort mode |
| XXX | 9 | Freeze Protection mode |

*Table 10: Operating Display and Service Display Codes.*

*PAGE INTENTIONALLY LEFT EMPTY*

# 3.0 STARTUP & COMMISSIONING

## 3.1 LIGHTING & SHUTTING DOWN THE UNIT

### FOR YOUR SAFETY READ BEFORE OPERATING

**WARNING: If you do not follow these instructions exactly, a fire or explosion may result causing property damage, personal injury or loss of life**

A. This appliance does not have a pilot. It is equipped with an ignition device which automatically lights the burner. Do not try to light the burner by hand.
B. BEFORE OPERATING smell all around the appliance area for gas. Be sure to smell next to the floor because some gas is heavier than air and will settle on the floor.
   WHAT TO DO IF YOU SMELL GAS
   - Do not try to light any appliance.
   - Do not touch any electric switch; do not use any phone in your building.
   - Immediately call your gas supplier from a neighbor's phone. Follow the gas supplier's instructions.
   - If you cannot reach your gas supplier, call the fire department.
C. Use only your hand to turn the gas control valve. Never force using tools. If the valve will not turn by hand, don't try to repair it, call a qualified service technician. Force or attempted repair may result in a fire or explosion.
D. Do not use this appliance if any part has been under water. Immediately call a qualified service technician to inspect the appliance and to replace any part of the control system and any gas control which has been under water.

### OPERATING INSTRUCTIONS

1. STOP! Read the safety information above on this label before doing anything.
2. Set the thermostat to lowest setting.
3. Turn off all electric power to the appliance by selecting main power switch to OFF.
4. This appliance is equipped with an ignition device which automatically lights the burner. Do not try to light the burner by hand.
5. Locate manual gas shut-off valve (see pictures below) and turn clockwise to "CLOSE".
6. Wait five (5) minutes to clear out any gas. Then smell for gas, including near the floor. If you smell gas, STOP! Follow step "B" in the safety information above on this label. If you don't smell gas, go to the next step.
7. Turn gas control valve to OPEN.
8. Turn on electric power to appliance by selecting main power switch to ON.
9. Set thermostat to desired setting.
10. If the appliance will not operate, follow the instructions "TO TURN OFF GAS APPLIANCE" and call your service technician or gas supplier.

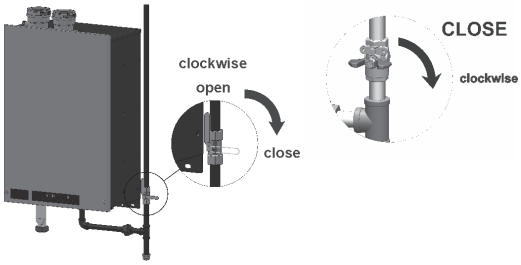


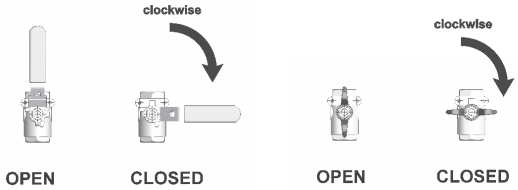


### TO TURN OFF GAS APPLIANCE

1. Set the thermostat to lowest setting.
2. Turn off all electric power to the appliance by selecting main power switch to OFF.
3. Turn gas control valve to CLOSE.

# 3.2 PRIOR TO START-UP

**⚠ DANGERS**

**- Fill trap with water before unit is first fired to prevent exhaust fumes from entering room. Never operate the unit unless the trap is filled with water.**

**Failure to comply will result in severe personal injury or death.**

**- It is forbidden to make adjustments to the IBC gas valve except with a properly calibrated gas combustion analyzer by persons who are trained and experienced in its use. Failure to use an analyzer can result in an immediate hazard.**

| ALTERNATIVE NATURAL GAS ORIFICES FOR CALORIFIC VALUES 750–900 BTU/FT³ | |
|---|---|
| **MODEL NUMBER** | **ORIFICE SIZE** |
| SFC-99 | 426 (P-839) |
| SFC-125 | 490 (P-840) |

## 3.2.1 Pre-Ignition Checks

1. Fill the condensation trap. Ensure the venting system is complete and seal-tested. Confirm that any common venting system at the installation site is isolated and independent of the SFC unit, that any holes left from removal of a previous unit have been sealed, and that any resizing of the old flue has been done.
2. Check that the water piping system is fully flushed and charged, and that all air has been discharged. Use a minimum water pressure of 12 psig and confirm that the pressure relief valve is installed and safely drained.
3. Check to see that adequate gas pressure is present at the inlet gas supply test port. With the unit gas valve shut off, using a Torx 15 screwdriver, open the test port by turning its center-screw 1 full turn counterclockwise. Connect a manometer and open the manual gas valve. Requirements are minimum 5" w.c. and maximum 14" w.c. Check that there are no gas leaks.
4. Perform a final check of electrical wiring and provide power to the unit to initialize operation.

## 3.2.2 Test Ignition Safety Shutoff

With the unit in operation, test the ignition system safety shutoff device by shutting the manual gas valve immediately outside the unit case. Ensure that the unit has shut off and that the appropriate error information is displayed on the main display screen. To restart the unit, press the Reset button.

# 3.3 COMMISSIONING

The SFC series units are factory calibrated to operate with natural gas at sea level. High Fire adjustment is required only if the calorific value of the fuel is out of the normally expected range (NG range 950-1100 BTU/Ft³). Consult your local fuel provider for your fuel's calorific value. Low fire is field adjustable, but must be done with caution. No mixture adjustment may be performed unless done by a qualified technician using properly functioning and calibrated combustion analyzing equipment.

***This unit model can burn either natural gas or propane if equipped with the correct specified orifice. Examine the rating plate of the unit to ensure it is configured for the fuel you are using. If the unit is to be converted from natural gas to propane or from propane to natural gas a fuel conversion kit must be installed. For the correct fuel conversion kit part number, see the table below:***

| MODEL NUMBER | NATURAL GAS TO PROPANE | PROPANE TO NATURAL GAS |
|---|---|---|
| SFC-99 | P-804 | P-805 |
| SFC-125 | P-806 | P-807 |

*Table 11: Fuel conversion kits*

The gas valve will automatically de-rate the maximum input in accordance with the density altitude, by approximately 2% per 1,000' above sea level. The gas valve's zero governor will ensure that the gas-air mixture is not be affected at altitude.

**⚠ WARNING**

**Check the rating plate of the unit to ensure it is configured for the fuel you are using. If the fuel is incorrect for the appliance, a conversion kit must be ordered from IBC and the gas valve adjusted accordingly.**

**Failure to perform the required fuel conversion can result in an immediate hazard.**

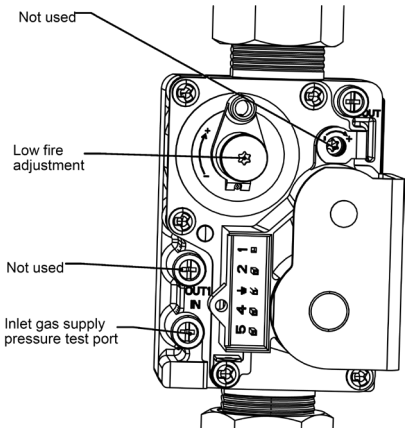


*Figure 40 Gas Valve Adjust*

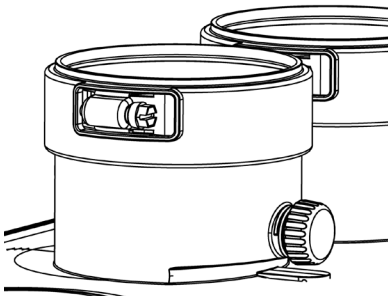

*Figure 41: Flue gas test port plug*

To verify the proper operation of the gas valve in the field, the following procedure can be carried out by a qualified technician *(see diagrams on this page).*

1. Turn off the unit's manual gas valve. With a Torx 15 screwdriver, open the inlet gas supply pressure test port by turning its screw 1 full turn counterclockwise. Attach a manometer to the pressure test port. Turn on gas to the appliance. Static manometer reading should be ideally 7" w.c., for natural gas and 11" w.c. for propane. Minimum and maximum static pressure must be between 5" and 14" w.c. Monitor pressure throughout the commissioning procedure. Pressure may droop up to 1" at high fire.
2. Allow the unit to ignite / run against a large load, to maintain high fire. To set the high-fire manually, press and hold the Service icon for two seconds. Then while holding the Service icon press the Plus button twice. "H" will show in the service display as the unit enters high fire.

   **NOTE:** Allow the unit to operate at high fire for 3 minutes to stabilize. (The unit operates in manual mode for 10 minutes then switches back to the normal operating mode. To extend manual mode operation, press the Service and Plus together twice while the unit is operating in manual mode to reset the timer for 10 more minutes.) Do not make adjustments if the Service display shows an "h".
3. Clock the natural gas meter to confirm full maximum rating plate input. With a combustion analyzer probe in the flue gas test port, check the measured results against *Table 12 - High Fire*. If the results are outside the permitted range, check the inlet pressure, and confirm that the correct orifice and venturi are installed. For areas of lower calorific value natural gas, install the alternative orifice listed on page 3-4.
4. Switch the unit to low fire by pressing the Service button and Minus buttons at the same time. The unit will drop to low fire. "L" will show on the service display. Compare the readings with *Table 12 - Low Fire*. If adjustment is necessary, remove the low fire adjustment cap to reveal a Torx head screw. Make minimal adjustments, typically less than 1/8th of a turn at a time. Turn the screw clockwise to increase $CO_2$ and counter-clockwise to reduce $CO_2$. If the target cannot be met, even after a full turn, contact the factory. When finished, replace the low fire cap, and leave the manual mode by pressing Plus AND Minus simultaneously.
5. Switch off the unit by pressing the space above the dot for two seconds. Turn off the gas at the unit's manual gas valve. Remove the flue gas analyzer from the test port and reinstall the test port cap. Remove the gas pressure manometer from the gas valve and fully close the test port. Turn on the gas at the appliance's gas shut off valve. Ensure that there are no gas leaks and reinstall the front cover. Turn on the unit by pressing the space above the dot for two seconds.

# 3.4 FUEL CONVERSION

**⚠ DANGER**

**Operating any IBC unit using a fuel other than the fuel listed on its rating plate is prohibited. If the information in this section related to conversion to alternative fuels is not followed exactly, a dangerous situation can result, leading to fire or explosion, which may cause property damage, personal injury, or loss of life.**

| PROPANE ORIFICE CHART | |
|---|---|
| MODEL NUMBER | ORIFICE SIZE |
| SFC-99 | 315 |
| SFC-125 | 370 |

| NATURAL GAS ORIFICE CHART | |
|---|---|
| MODEL NUMBER | ORIFICE SIZE |
| SFC-99 | 392 |
| SFC-125 | 450 |

| ALTERNATIVE NATURAL GAS ORIFICES FOR CALORIFIC VALUES 750–900 BTU/FT³ | |
|---|---|
| MODEL NUMBER | ORIFICE SIZE |
| SFC-99 | 426 (P-839) |
| SFC-125 | 490 (P-840) |

The SFC series modulating unit is factory fire-tested to operate with natural gas. The rating plate is marked to indicate which fuel the particular unit has been set up with. Firing a unit with a fuel other than what is listed on the rating plate is prohibited unless the following conversion procedure is completed by a qualified technician.

Fuel conversion requires hardware adjustments (orifice replacement) as well as measurement and possible tuning of the low fire mixture. Detailed instructions including parts and labeling are found in Fuel Conversion kits. *Refer to Table 11 for the correct kit number.*

| | NATURAL GAS | PROPANE |
|---|---|---|
| **$CO_2$ VALUE (%) AT HIGH FIRE WITH THE FRONT COVER OPEN** | | |
| Max. $CO_2$ value | 10.1% | 11.5% |
| Min. $CO_2$ value | 9.1% | 9.8% |
| **$CO_2$ VALUE (%) AT LOW FIRE WITH THE FRONT COVER OPEN** | | |
| Max. $CO_2$ value | = Actual value at High fire | = Actual value at High fire – 0.3% |
| Min. $CO_2$ value | 9.1% | 9.5% |

*Table 12: $CO_2$ Values and High and Low Fire*

The following procedure must be carried out by a qualified technician.

1. Ensure that the gas supply is turned off at the manual gas valve.
2. Disconnect the electrical power.
3. Disconnect the nut at the gas valve outlet (top of the gas valve) and remove the orifice and O-ring.
4. Insert the correct orifice into the O-ring, and re-install into the nut at the gas valve outlet (top of the gas valve) and then tighten the nut.
5. Restore the gas supply by opening the manual gas valve.
6. Test for leaks by using an approved leak detection solution on all joints.
7. Carefully follow the *"Prior to Start-Up" – Section 3.2 and "Commissioning" – Section 3.3 procedures on the preceeding pages 3-2 and 3-3.*

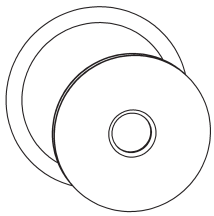

*Figure 42: Orifice and O-ring*

**⚠ WARNING**

**Each SFC series unit is equipped with a back flow valve installed at the outlet of the fan. Inspect the back flow flapper annually.**

*Figure 43: Back Flow Valve*

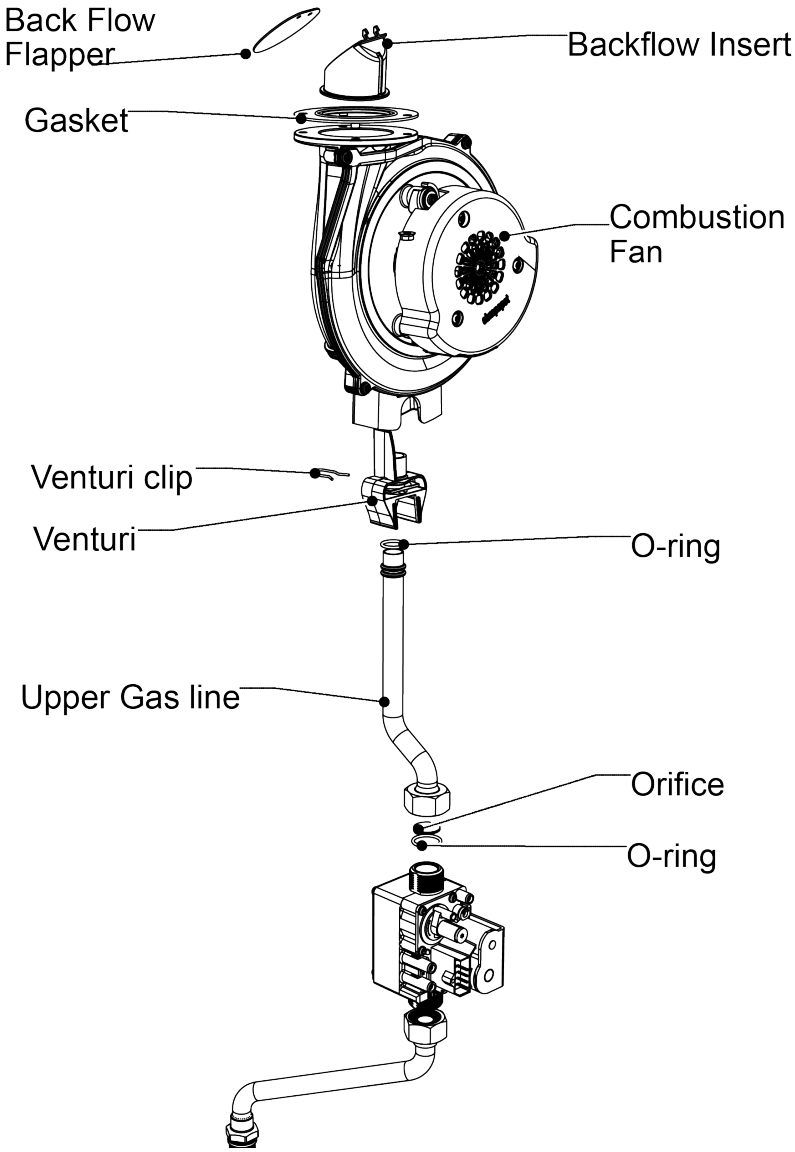


*Figure 44: Blower and Gas Valve Assembly*

## 3.4.1 Gaining access to combustion chamber, burner removal instructions

### DISASSEMBLY

1. Turn off the main power switch to the unit.
2. Turn off the gas supply valve to the unit.

   There is no need to drain the unit unless the unit will be exposed to freezing conditions while off.
3. Remove the front cover, and allow the unit to cool.
4. Unplug the electrical connector at the gas valve and fan.
5. Loosen the lower gas valve connection nut.

   **NOTE:** There is an O-ring in the lower gas connection and an O-ring and orifice in the upper gas valve connection. Place these in a safe location to be used for reassembly. Cover the gas piping connections to prevent debris from entering the gas piping.

**NOTE**

**The safety warning regarding burner refractory on page 4-2 of this manual must be observed.**

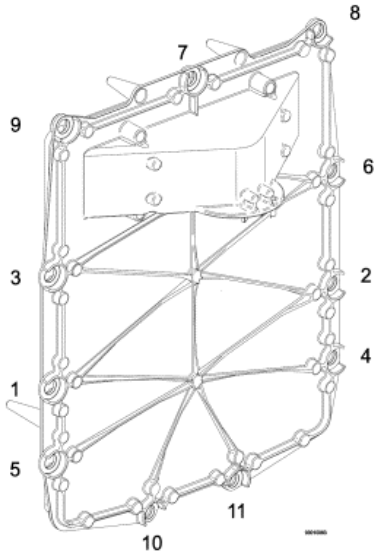


*Figure 45: Tighten Allen bolts in cross pattern direction.*

**CAUTION:** When removing the heat exchanger cover in step 7, be careful not to damage the burner and refractory material located on the opposite side of the heat exchanger cover. Use caution when handling refractory materials. *See Caution on page 4-2.*

6. Remove all 6mm Allen bolts from the heat exchanger cover and carefully remove the front cover complete with the fan and the gas valve attached. Carefully inspect the gasket sealing the heat exchanger to the heat exchanger cover for damage, hardness, cracks, and/or discoloration. If damaged in any way, you must replace the gasket.
7. Place the heat exchanger cover in a safe location.

**REASSEMBLY**

1. Replace the heat exchanger gasket. Inspect, and when needed change other gaskets. If necessary, inspect and clean the gasket mating surface.
2. Place the heat exchanger cover onto the heat exchanger and loosely install the 6mm Allen bolts removed in step 6. Tighten the 6mm hex bolts in a cross pattern as shown in the Figure 45.
3. Connect the gas line to the gas valve ensuring the O-ring is in place. Tighten the gas valve nut. Ensure the upper gas valve connection is tight. Re-connect the gas valve electrical connection.
4. Re-connect the electrical connection to the fan.
5. Inspect the condensate trap for debris. Remove and clean if necessary. Fill the condensate trap with water.
6. Turn on the gas supply valve to the unit and inspect for gas leaks. Use an approved leak detection solution. Soap test all joints.
7. Ensure the unit is full of water and purged of air if the unit was drained during disassembly.
8. Turn on the power to the unit and create a call for heat or for domestic hot water.
9. Inspect the gasket around the unit cover.
10. Check flue gases for proper combustion. *See Section 3.3 Commissioning* for proper adjustments.
11. Re-install the unit's cover and set the unit into normal operation.

# 4.0 MAINTENANCE

## 4.1 UNIT MAINTENANCE

**WARNINGS**

**- Fill the trap with water before the unit is first fired to prevent exhaust fumes from entering the room. Never operate the unit unless the trap is filled with water.**

**Failure to comply will result in severe personal injury or death.**

**- Whenever the burner is removed for inspection or unit servicing, examine the sealing gaskets and replace if damaged.**

**CAUTION**

**- The owner is responsible for general care of the unit. Improper maintenance of the unit may result in a hazardous condition.**

**- Periodic inspection of the low water cut-off device, including flushing of float types, is required, if installed as an accessory to the unit.**

**- When servicing controls, label all wires prior to disconnection. Wiring errors can cause improper and dangerous operation.**

**- When removing a burner, a new burner gasket is required.**

### 4.1.1 General Care

- Keep combustible materials and flammable liquids and vapors away from the unit.
- Keep vent terminals clear of obstructions (snow, dirt, etc.).

### 4.1.2 Inspection

**Inspection of the unit is to be performed annually by a qualified service technician.**

### 4.1.3 Venting

- Check vent terminals for any obstructions (e.g. leaves, dust, other debris).
- Check and clean or replace intake screens as required.
- Check for holes or leaks in venting. Replace venting as needed.
- Examine for any signs of moisture caused by sweating intake air pipes. Insulate as required.
- Ensure proper resealing or reinstallation of venting at each servicing.

### 4.1.4 Condensate Trap

- Examine the condensate trap every two months to see if cleaning is necessary *(refer to trap cleaning instructions, section 1.5.3 of this manual).* Ensure that the trap has been re-filled completely before firing the unit.
- Check the pH level of the condensate discharge if using condensate neutralization.

### 4.1.5 Burner

- At the first annual service, remove the burner to inspect the extent of fouling *(refer to burner removal and reassembly instructions, section 3.4.1 of this manual).* Blow clear using compressed air. Evaluate the magnitude of clearing required, and establish a reasonable burner inspection schedule. Some installations may call for annual service, others showing clean burners will only need attention every 2 years. In alternate years, visually inspect burner through the sight glass. Ensure the flame is stable and without excessive fluttering. Normal flame pattern is evenly distributed over the burner surface.
- If the burner is operating improperly, remove and clean or replace. Use a $CO_2$ analyzer to determine proper combustion. *See Table 12 for correct values.*

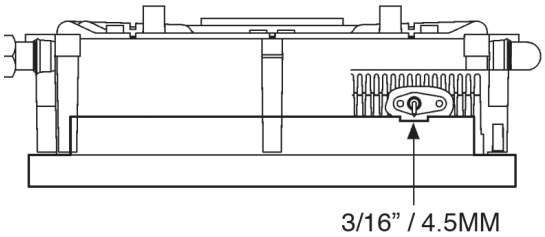


*Figure 46: Using the 251-001 ignitor gapping tool to confirm ignitor-burner gap is 3/16" / 4.5mm*

**⚠ CAUTION**

**The heat exchanger has a small amount of combustion chamber insulation (refractory), that contains ceramic fibers.**

**When exposed to extremely high temperatures, the ceramic fibers, which contain crystalline silica, can be converted into cristobalite, classified as a possible human carcinogen.**

**Avoid disturbing or damaging the refractory. If damage occurs, contact the factory for directions.**

**Avoid breathing in fumes and contact with skin and eyes. Follow these precautions:**

1. **For conditions of frequent use or heavy exposure, you need a respirator. For respirators certified by NIOSH, refer to the "NIOSH Guide to the Selection and Use of Particulate Respirators Certified under 42 CFR 84".**

   **For current information, contact NIOSH on 1-800-356-4676 or on the web at www.cdc.gov/niosh.**
2. **Wear long sleeved, loose fitting clothing, gloves and eyes protection.**
3. **Assure adequate ventilation.**
4. **Wash with soap and water after contact.**
5. **Wash potentially contaminated clothes separately from other laundry, and rinse clothes thoroughly.**
6. **Discard used insulation in an air tight plastic bag.**

**NIOSH first aid guidelines:**

- **Eye contact - Irrigate and wash immediately.**
- **Breathing in fumes - Provide fresh air.**

## 4.1.6 Heat Exchanger

During annual inspection (with the heat exchanger cover removed), examine the heat exchanger for signs of contamination and clean if necessary. In areas of poor gas quality or contaminated combustion air, there may be a build-up of black plaque (typically sulfur). Other fouling agents are airborne dust, debris and volatiles. Clean the heat exchanger surface with a stiff plastic bristle brush only.

During maintenance, the heat exchanger gasket needs to be replaced. Inspect other gaskets, and change when needed. *Refer to the heat exchanger cover removal instructions in Section 3.5.1* for access to the combustion chamber and heat exchanger. ***Observe the safety warning regarding the burner refractory on this page.***

## 4.1.7 Pump

Check that the pump is on in normal space heating operation, and that the water ΔT is reasonable for the heating application.

## 4.1.8 Gas Piping

Check for damage or leaks, and repair as needed.

## 4.1.9 Control Module

- Check that unit operation is consistent with the steps in *Section 2.7* **Sequence of Operation**.
- Check that water temperature targets and setpoint are satisfactory, and have not been adversely amended.
- Check that the domestic hot water generation is performing as expected. Fouling of the interior of the domestic heating coil can cause poor performance.

## 4.1.10 Water Heating System

- Check water pressure and temperature. There should be no noticeable change if the unit and system components are functioning normally. Check for any noise in the system.
- Check heating system water piping for damage or leaks, and repair as needed.
- Check for 12-15 psig in normal operation, and look to ensure pressure does not run up toward 30 psig at high temperature. If pressure rises sharply, consider replacement of the expansion tank. Check also for noise at high fire that may signal water quality problems.
- Water chemistry must be of a quality generally accepted as suitable for hydronic applications. *See Section 1.6 for details.*
- Ensure that any direct "city fill" water connections are left in the **closed** position to minimize exposure to leaks and flooding.

## 4.1.11 Freeze Protection

The unit's controller operates the unit as needed to protect it from freezing. If the unit and system components are vulnerable to freezing we recommend using a freeze protection solution. Use antifreeze made specifically for hydronic systems. We recommend inhibited propylene glycol.

**⚠ WARNING**

**Do not use automotive-type ethylene or other types of automotive glycol antifreeze, or undiluted antifreeze of any kind. This may result in severe unit damage. The installer is responsible in ensuring that glycol solutions are formulated to inhibit corrosion in hydronic heating systems of mixed materials. Improper mixtures and chemical additives may cause damage to ferrous and non-ferrous components as well as non-metallic, wetted components, normally found in hydronic systems. Ethylene glycol is toxic, and may be prohibited for use by codes applicable to your installation location. For environmental and toxicity reasons, IBC recommends only using non-toxic propylene glycol.**

**⚠ NOTE**

**Installers should contact local water purveyors about the suitability of their supply for use in hydronic heating systems.**

**If water quality is questionable, a local water treatment expert must be consulted for testing, assessment and, if required, treatment.**

**Alternatively, water or hydronic fluid of known quality can be brought to the site.**

**⚠ CAUTION**

**Before testing the relief valve, make certain the discharge pipe is properly connected to the valve outlet, and arranged to contain and safely dispose of equipment discharge.**

Antifreeze concentration must be between 25% and 35% of the total volume of water in the system.

## 4.1.12 System Treatment

- Check consistency of any system treatment used, for appropriate mixture. Chemical inhibitors are consumed over time, lowering their density.
- Verify proper operation after servicing.

## 4.1.13 Relief Valve - Maintenance and Testing

The relief valve manufacturer requires that under normal operating conditions a “try lever test” must be performed every two months. Under severe service conditions, or if corrosion and/or deposits are noticed within the valve body, you must test more often. Also perform a “try lever test” at the end of any non-service period.

Test at or near maximum operating pressure by holding the test lever fully open for at least 5 seconds to flush the valve seat free of sediment and debris. Then release the lever and permit the valve to snap shut.

If the lever does not activate, or there is no evidence of discharge, discontinue use of equipment immediately, and contact a licensed contractor or qualified service personnel.

If the relief valve does not completely seal, and fluid continues to leak from the discharge pipe, perform the test again to try and flush any debris that may be lodged in the valve. If repeated attempts fail to stop the leakage, contact a licensed contractor or qualified service personnel to replace the valve.

While performing a “try lever test”, a quantity of heat transfer fluid will be discharged from the piping system, and the system pressure will drop. This fluid must be replaced. IBC highly recommends using a system pressurization unit such as an *Axiom Industries model MF200* to refill and pressurize your system. Capture the discharged fluid in a container and recycle it by returning it to the system feeder unit. This is particularly important when your system contains treatment chemicals or glycol solutions. If the system employs plain water, turn on the unit’s auto fill valve to recharge the lost fluid.

## 4.1.14 Domestic Hot Water System

Quality of the domestic cold water is very important to the longevity of the unit. The recommended pH of the domestic water is between 6.5 and 8.5. The internal domestic water heat exchanger tubing and the flow sensor is subject to fouling if exposed to hard water (over 11.68 grains of hardness) or has a TDS of 500mg/L or higher. *See Table 13.*

**⚠ DANGER**

**When servicing or replacing the fan, you must transfer the venturi from the old fan to the new fan.**

**Failure to relocate the venturi to the new fan may cause an immediately hazardous situation which must be avoided in order to prevent serious injury or death.**

| DESCRIPTION | MAX | MIN |
|---|---|---|
| Water Pressure | 150 psi | 40 psi |
| Programmable water temperature | 149°F (65°C) | 104°F (40°C) |
| Minimum Flow Rate to Activate DHW Sensor | N/A | 0.5 GPM |
| Acceptable pH range | 8.5 pH | 6.5 pH |
| Total Dissolved Solids | 500 mg/L | |
| Total Hardness | 200 mg/L 11.68 gr/gal | |
| Aluminum | 0.05 to 0.2 mg/L | |
| Chlorides | 250 mg/L | |
| Copper | 1.0 mg/L | |
| Iron | 0.3 mg/L | |
| Manganese | 0.05 mg/L | |
| Zinc | 5 mg/L | |

*Table 13: Domestic Water Quality Guidelines*

## 4.1.15 Fan and gas valve removal instructions

1. Turn off the power and the gas supply to the unit.
2. Remove the front cover, and allow the unit to cool down.
3. Disconnect the electrical plug attached to the fan.
4. Loosen the union nut at the top of the gas valve. Carefully remove the orifice and O-ring, and keep in a safe place for re-installation later. Ensure you protect the gas valve outlet from dust and debris.
5. Remove the 2 hex nuts connecting the fan to the burner housing, and carefully remove the fan. You will find a gasket attached to the fan outlet as well as an internal check valve. Keep these items in a safe place for re-installation.
6. If the removed fan is to be re-installed, ensure the fan and venturi are clean and dust free.

## 4.1.16 Fan and gas valve re-assembly instructions

1. Place the fan gasket on the outlet of the fan housing. The gasket has 2 locator pins to ensure the gasket does not move during installation.
2. Place the check valve on the fan gasket, and attach the fan to the burner housing and install the 2 hex nuts. Tighten the 2 hex nuts with a wrench.
3. Insert the orifice and O-ring between the gas valve outlet and the gas line to the fan. Tighten the gas valve union nut with a wrench. Ensure that the gas valve inlet (lower) nut is tight.
4. Connect the electrical plug to the fan.
5. Restore the gas supply to the unit, and test the gas valve inlet for gas leaks.
6. Restore the power to the unit, and create a call for heat or hot water.
7. Check for leaks at the gas valve outlet and the connection between the fan and the burner housing.
8. Install the cover to the unit.
9. Reset the unit to normal operation.

# 5.0 TROUBLESHOOTING

**⚠ NOTE**

**This unit is equipped with a blocked vent shut-off system that closes the gas supply when it detects an irregular venting condition.**

The troubleshooting section is divided into four sections:

**5.1 Preliminary Checks**
**5.2 Electronic Components**
**5.3 Warnings and Faults**
**5.4 Other Faults**

Often, you can identify and solve a problem through simple checks of the basics: confirming the electrical power supply, gas flow and resetting the thermostat control. To help with preliminary checks, the unit's control module offers a clear visual display of the status of the various control circuit components.

Should a problem remain unsolved after applying the preliminary checks, proceed to the detailed system review in this guide. The Troubleshooting chapter covers potential error conditions, grouped into the following categories:

**5.3.1 Warning Codes**
**5.3.2 Fault Codes**
**5.4.1 Burner does not Ignite**
**5.4.2 Burner Ignites Noisily**
**5.4.3 Burner Resonating**
**5.4.4 The Power is Reduced**
**5.4.5 No Space Heating**
**5.4.6 Indoor Temperature Does Not Reach Desired Temperature**
**5.4.7 No Hot Water (DHW)**
**5.4.8 Hot Water Does Not Reach Temperature**

Below each section is a list of symptoms, diagnoses, and solutions.

Some diagrams *(see Section 6.0)* are included for use with troubleshooting including:

- Electrical Wiring Diagrams
- Unit Component Layout Diagrams

## 5.1 PRELIMINARY CHECKS

As a first step in troubleshooting, you should review the controller's display screen. Diagnostic features incorporated in the software evaluate system integrity, display error conditions, and indicate initial troubleshooting action.

In addition to checking the controller's display, try these troubleshooting steps:

1. Confirm power to the unit: check that control module display is on (e.g., display is lit).
2. Check that unit is not in a safety lockout.
3. Ensure that wiring is clean and secure.
4. Check that gas is reaching the unit.
5. Confirm that the water system is properly charged to 12 psig and that the pump is serviceable.

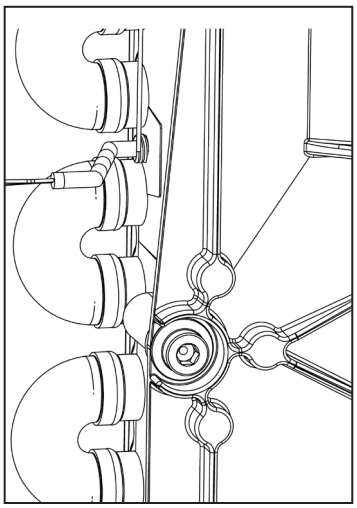

*Figure 47: Heat exchanger temperature sensor*

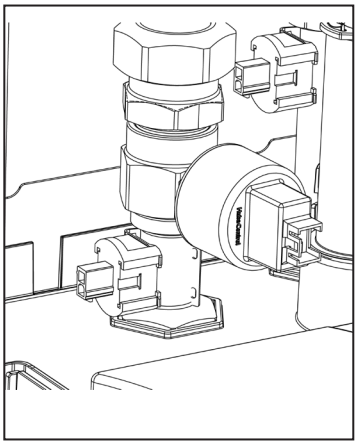

*Figure 48: Water temperature sensor*

# 5.2 ELECTRONIC COMPONENTS

This section details the method for troubleshooting the non-standard electronic components on the unit, including the electronic water pressure sensor-type LWCO and the temperature sensors.

## 5.2.1 Temperature Sensors

The resistance of the temperature sensors varies inversely with temperature. To test, measure the temperature of the sensed environment and compare with the value derived from the measurement of the resistance (obtained by connecting a good quality test meter capable of measuring up to 5,000 KΩ (5,000,000Ω) at the controller end of the sensor lead).

To obtain a resistance reading, remove power to the unit. For the supply water and return water temperature sensors, remove the wire leads by disconnecting their respective Molex connectors. Place multi-meter probes into the sensor's male Molex connector socket. Do not apply voltage to the sensor as damage may result.

*12KΩ temperature sensors are supplied with the unit. See Table 15 for resistance values.*

| SENSOR | TYPE | PURPOSE | LOCATION |
|---|---|---|---|
| S0 | NTC 12KΩ | Heat Exchanger Temperature | Upper Left of Heat Exchanger |
| S1 | NTC 12KΩ | Heating Supply Temperature | Heating Supply Pipe |
| S3 | NTC 12KΩ | Domestic Hot Water | DHW Supply Pipe |
| S7 | NTC 10KΩ | Hot Water Tank | External Water Heater |
| S6 | NTC 12KΩ | Outdoor Sensor | Outdoors (North side) |
| S5 | NTC 12KΩ | Flue Gas Temperature | Top of rear Flue passage |
| | | Water Pressure | Heating Supply Pipe |

*Table 14: Temperature and Pressure Sensors*

| TEMPERATURE | RESISTANCE | TEMPERATURE | RESISTANCE | TEMPERATURE | RESISTANCE |
|---|---|---|---|---|---|
| F / C | Ω - ohm | F / C | Ω - ohm | F / C | Ω - ohm |
| 5F / -15C | 76,020 | 77F / 25C | 12,000 | 149F / 65C | 2,752 |
| 14F / -10C | 58,880 | 86F / 30C | 9,805 | 158F / 70C | 2,337 |
| 23F / -5C | 45,950 | 95F / 35C | 8,055 | 167F / 75C | 1,994 |
| 32F / 0C | 36,130 | 104F / 40C | 6,653 | 176F / 80C | 1,707 |
| 41F / 5C | 28,600 | 113F / 45C | 5,522 | 185F / 85C | 1,467 |
| 50F / 10C | 22,800 | 122F / 50C | 4,609 | 194F / 90C | 1,266 |
| 59F / 15C | 18,300 | 131F / 55C | 3,863 | 203F / 95C | 1,096 |
| 68F / 20C | 14,770 | 140F / 60C | 3,253 | 212F / 100C | 952 |

*Table 15: Temperature Sensor Resistance Values – 12KΩ sensors.*

### 5.2.2 Fan/Blower

Control and power to the fan is provided via a single wiring harness to the controller.

### 5.2.3 Thermostat Connections

The unit's controller is designed to heat a single space heating load. The load can consist of a single zone or several zones. In either method, the 'Call for Heat' must be from a device providing a dry contact and connected to X13.1 and X13.2. The use of power-robbing thermostats directly will cause the unit to operate erratically. If using a power-robbing thermostat, you will need to isolate it through a relay. An Open Therm device can also be used across X13.1 and X13.2.

### 5.2.4 Water Pressure Sensor-Type Low Water Cut Off (LWCO)

The SFC unit is equipped with a pressure sensor that serves as a low-water cut-off. The water pressure is displayed in the main display when the pressure is low. For example, a system water pressure of 4.6psi would be displayed as 4.6P. If the pressure is too low the controller flashes an error message in the main display by toggling between the actual pressure and LO. To correct this error, increase the system pressure. The water pressure in the heating system must be higher than 8psi for the unit to reach maximum firing rate. When the water pressure is less than 8psi, the unit restricts its firing rate. If the pressure is less than 4psi then the unit will not fire at all.

**To test the operation of the pressure sensor – type LWCO**

1. Turn off the unit at the controller by pressing the area above the dot. The current system pressure is displayed.
2. Isolate the space heating circuit, and reduce the water pressure. The displayed water pressure should drop as the system water is being removed (expansion tank isolated). If the pressure remains steady the pressure sensor may be blocked or faulty. If it remains "fixed", drain the unit and replace the sensor, or dislodge any blocking debris from the sensor inlet channel and reinsert.
3. If the pressure sensor is OK refill the unit and open the closed valves. Ensure the system pressure is adequate for the heating system.

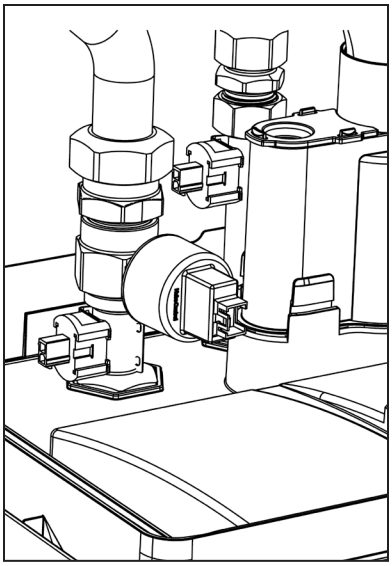

*Figure 49: Water Pressure Sensor Type LWCO*

**PRESSURE SENSOR LWCO REPLACEMENT**

1. Turn off the power to the unit.
2. Isolate and drain the unit.
3. Disconnect the electrical connection to the sensor.
4. Carefully remove the pressure sensor by loosening it, turn the nut counter clockwise until it can be removed. If there is some water leakage, ensure the water does not spill into the controller.
5. Push the new sensor into the socket while twisting slightly. Take care to avoid damage to the O-ring.
6. Connect the electrical connector to the sensor.
7. Restore water pressure to the unit.
8. Restore power to the unit.

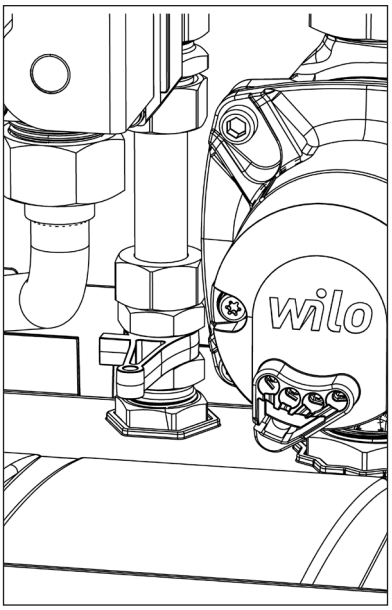


*Figure 50: Domestic Water Flow Sensor*

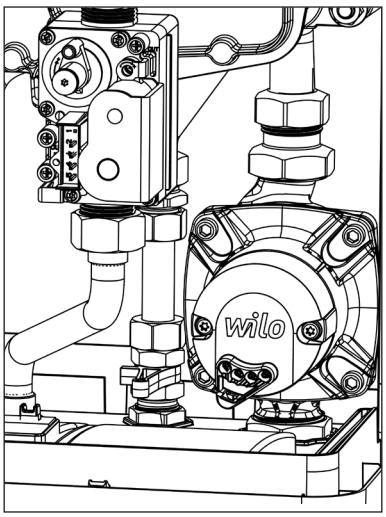


*Figure 51: Pump*

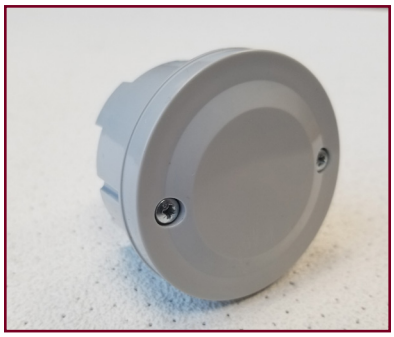

*Figure 52: Outdoor air temperature sensor*

## 5.2.5 Flue Gas Temperature Sensor

This sensor ensures that the unit shuts down safely if the heat exchanger or the venting system becomes blocked.

The flue gas temperature sensor is located at the top of the rear flue passage, below the top panel. To remove the sensor, unclip from the wiring harness and unscrew from the rear flue passage.

## 5.2.6 Domestic Hot Water Flow Sensor

The SFC series units are equipped with a flow sensor to measure water flow through the domestic hot water circuit in the water heater. The minimum flow required to activate the water heater is 0.5 GPM or 2 L/min.

To service or replace the water flow sensor:

1. Disconnect power to the unit.
2. Turn off the cold and hot water valves below the unit, release the water pressure and then drain the domestic hot water circuit. Leave the drain valves open.

## 5.2.7 Domestic Hot Water Sensor

The SFC Series units are equipped with a domestic hot water temperature sensor. The sensor is surface-mounted located on the hot water outlet pipe.

## 5.2.8 Outdoor Sensor

An outdoor sensor is supplied with each unit. The sensor should be mounted on the north side of the building away from any direct sunlight. Keep the sensor away from any heat sources such as exhaust fan outlets, dryer outlets, mechanical room ventilation grills etc.

The Outdoor sensor is a 12KΩ sensor with resistance values as listed in Table 15. If the sensor is not connected to the unit, the unit operates at the unit's supply temperature set in the User Setup menu, and operates as a set point load.

## 5.2.9 DHW Tank Sensor

The SFC series units allow the use of a tank sensor for controlling the domestic hot water tank temperature. IBC Indirect water heaters come with a 10KΩ sensor. An Aquastat can also be used.

If a field supplied domestic hot water sensor is used, it must be a 10KΩ sensor matching the following table.

| TEMPERATURE | | RESISTANCE | TEMPERATURE | | RESISTANCE |
|---|---|---|---|---|---|
| °F | °C | Ω | °F | °C | Ω |
| 0 | -18 | 85,362 | 100 | 38 | 5,828 |
| 5 | -15 | 72,918 | 105 | 41 | 5,210 |
| 10 | -12 | 62,465 | 110 | 43 | 4,665 |
| 15 | -9 | 53,658 | 115 | 46 | 4,184 |
| 20 | -7 | 42,218 | 120 | 49 | 3,760 |
| 25 | -4 | 39,913 | 125 | 52 | 3,383 |
| 30 | -1 | 34,558 | 130 | 54 | 3,050 |
| 35 | 2 | 29,996 | 135 | 57 | 2,754 |
| 40 | 4 | 26,099 | 140 | 60 | 2,490 |
| 45 | 7 | 22,763 | 145 | 63 | 2,255 |
| 50 | 10 | 19,900 | 150 | 66 | 2,045 |
| 55 | 13 | 17,436 | 155 | 68 | 1,857 |
| 60 | 16 | 15,311 | 160 | 71 | 1,689 |
| 65 | 18 | 13,474 | 165 | 74 | 1,538 |
| 70 | 21 | 11,883 | 170 | 77 | 1,403 |
| 75 | 24 | 10,501 | 175 | 79 | 1,281 |
| 80 | 27 | 9,299 | 180 | 82 | 1,172 |
| 85 | 29 | 8,250 | 185 | 85 | 1,073 |
| 90 | 32 | 7,334 | 190 | 88 | 983 |
| 95 | 35 | 6,532 | 195 | 91 | 903 |

*Table 16: Temperature Sensor resistance values – 10KΩ sensor*

# 5.3 WARNINGS AND FAULTS

## 5.3.1 Warning Codes

During operation the controller can detect unusual situations and can take action to avoid damage to the heat exchanger or other unsafe operations. During these situations, the controller limits the temperature and power output of the burner, or temporarily disables operation entirely.

These warnings are shown flashing and visible on the main display, and displayed only when an unusual reading is currently detected.

| FAULT CODE | DESCRIPTION | POSSIBLE CAUSE / SOLUTION |
|---|---|---|
| F000 | Heat exchanger temperature sensor S0 is defective. | Replace heat exchanger sensor S0. |
| F001 | Temperature is too high during central heating demand. | • Air in system. Bleed the central heating system<br>• Pump does not run. Replace the pump.<br>• Check the wiring of heating supply temperature sensor S1 for breakage/shadow.<br>• Check whether heating supply temperature sensor S1 is installed correctly.<br>• Check for the correct operation of heating supply temperature sensor S1.<br>• Replace the heating supply temperature sensor S1. |
| F002 | Temperature too high during DHW demand. | • Check wiring of domestic hot water sensor S3 for breakage/ shutdown<br>• Check whether domestic hot water sensor S3 is installed correctly.<br>• Check for the correct operation of domestic hot water sensor S3.<br>• Replace the domestic hot water sensor S3. |
| F003 | Flue gas temperature is too high. | • Check the heat exchanger for contamination. |
| F004 | No flame during start-up. | • Gas valve is closed.<br>• Gas inlet pressure lower than 4” or sometimes disappears.<br>• Gas valve or ignition unit is not receiving electricity.<br>• Poor internal grounding. |
| F005 | Flame disappears during operation. | • Condensation drain is blocked.<br>• Gas inlet pressure lower than 4“ or sometimes disappears.<br>• Check adjustment of gas valve.<br>• Check the air supply duct and flue for possible recirculation or blockage of flue gases.<br>• Poor internal grounding. |
| F006 | Flame simulation. | • Replace the gas valve.<br>• Replace the burner controller. |

| | | |
|---|---|---|
| F007 | No or insufficient flame current. | • Check the ignitor.<br>• Check the wiring of the ignitor for breakage/shutdown.<br>• Replace the ignitor. |
| F008 | Incorrect fan speed | • Check the fan cable.<br>• Check and/or replace the fan.<br>• Replace the burner controller. |
| F009 | Internal fault in burner controller. | • Replace the burner controller. |
| F010, F011 | Sensor fault S0. | • Check the wiring of heat exchanger sensor S0 for breakage/shutdown.<br>• Check whether the heat exchanger sensor S0 is connected correctly.<br>• Check for the correct operation of heat exchanger sensor S0.<br>• Replace the heat exchanger sensor S0. |
| F012 | Sensor fault S5. | • Check the wiring of flue gas sensor S5 for breakage/shutdown.<br>• Check whether the flue gas sensor S5 is connected correctly.<br>• Check for the correct operation of flue gas sensor S5.<br>• Replace the flue gas sensor S5. |
| F014 | Mounting fault sensor S0. | • Heat exchanger sensor S0 is not mounted correctly. Mount the sensor correctly. |
| F016 | Mounting fault S3 | • Domestic hot water sensor S3 is not mounted correctly. Mount the sensor correctly. |
| F018 | Flue and/or air supply duct is blocked. | • Check the flue and the air supply duct.<br>• Clean the flue and/or the air supply duct. |
| F019 | Boiler Memory Module (BMM) fault. | • Check BMM wiring for breakage/shutdown.<br>• Replace the BMM. |
| F027 | Short circuit of outdoor sensor S6. | • Check the wiring of the outdoor sensor for breakage/shutdown.<br>• Replace the outdoor sensor.<br>• BRINK WTW connection piece is connected. Burner controller is unsuitable for this application. Replace the burner controller with the correct version. |
| F028 | Reset error. | • Check the reset button for unintentional operation (e.g. cleaning of the control panel).<br>• Replace the burner controller. |
| F029 | Gas valve fault. | • Check the gas valve for leakage.<br>• Replace the burner controller. |
| F030 | Sensor fault S3. | • Check the wiring of the domestic hot water sensor S3 for breakage/shutdown.<br>• Check whether the domestic hot water sensor S3 is connected correctly.<br>• Check for the correct operation of domestic hot water sensor S3.<br>• Replace the domestic hot water sensor S3. |

# 5.4 OTHER FAULTS

## 5.4.1 No heat (central heating) fault codes

| POSSIBLE CAUSES | ANALYSIS | POSSIBLE SOLUTION |
|---|---|---|
| The power LED is not shown. | → Yes<br>↓No | • Check the power supply.<br>• Check the fuse (see Electrical schematic).<br>• Check wiring for breaks. |
| The right display shows a line (–).<br>The unit is off. | → Yes<br>↓No | • Switch on the unit by touching just above the power LED and holding for 2 seconds. |
| Room thermostat / weather-dependent control is not connected or is defective. | → Yes<br>↓No | • Check the wiring.<br>Check the OpenTherm, On/Off connection of the unit, or the connection between the central heating unit and the OpenTherm room thermostat. Replace the thermostat.<br>• Replace the weather-dependent control. |
| No electricity (24V). | → Yes | • Check the wiring according to the schematic.<br>• Check Connector X13. |

## 5.4.2 Central heating does not reach the correct temperature

| POSSIBLE CAUSES | ANALYSIS | POSSIBLE SOLUTION |
|---|---|---|
| Water pressure in the system is too low. | → Yes<br>↓No | Top up the system. |
| Room thermostat is not calling for heat. | → Yes<br>↓No | Check the setting and adjust it if necessary. |
| Temperature is set too low. | → Yes<br>↓No | Increase the central heating temperature (see central heating demand). If an outdoor sensor is present. Check the outdoor sensor. |
| No flow in the system. | → Yes<br>↓No | Check the ΔT ±36°F / ±20°C between the central heating supply and the return. Ensure a correct flow in the system. |
| The unit's capacity is not correctly set. | → Yes<br>↓No | Adjust the unit's capacity. |
| No heat transfer due to contamination in the central heating unit/system. | → Yes<br>↓No | Flush the central heating unit/system from the central heating side. |
| Flue and/or air supply duct is blocked. | → Yes | Check and (if necessary) clean the flue and the air supply duct. |

## 5.4.3 Central heating system remains too warm

| POSSIBLE CAUSES | ANALYSIS | POSSIBLE SOLUTION |
|---|---|---|
| Room thermostat / weather-dependent control is defective or has a short circuit. | → Yes<br>↓No | • Check the wiring.<br>Check the OpenTherm, On/Off connection of the unit, or the connection between the central heating unit and the RF room thermostat. Replace the thermostat.<br>• Replace the weather-dependent control. |
| There is thermo-siphon in the central heating circuit. | → Yes | Place a check valve (in the case of thermo-siphon) or a two-way valve (if there is a second pump in the central heating circuit). |

## 5.4.4 No domestic hot water (DHW)

| POSSIBLE CAUSES | ANALYSIS | POSSIBLE SOLUTION |
|---|---|---|
| The power LED is not shown. | → Yes<br>↓No | • Check the power supply.<br>• Check the fuse (see electrical schematic). |
| Flow sensor does not work. | → Yes<br>↓No | Replace the flow sensor. |
| Domestic hot water flow < 0.5 gpm | → Yes<br>↓No | Increase the domestic hot water flow. |
| Domestic hot water sensor S3 is defective. | → Yes<br>↓No | Replace the domestic hot water sensor S3. |
| No electricity on the flow sensor (5V DC). | → Yes | Check the wiring according to the schematic. |

## 5.4.5 Domestic hot tap water does not reach the correct temperature

| POSSIBLE CAUSES | ANALYSIS | POSSIBLE SOLUTION |
|---|---|---|
| Domestic hot water flow is too high. | → Yes<br>↓No | Reduce the domestic hot water flow. |
| Setting for domestic hot water temperature is too low. | → Yes<br>↓No | Increase the domestic hot water temperature. |
| Insufficient heat transfer due to calcium or contamination in the domestic hot water-sided central heating unit. | → Yes<br>↓No | De-calcify or flush the domestic hot water-sided central heating unit. |
| *The central heating system becomes warm while tapping water.* | → Yes<br>↓No | Undesirable circulation during domestic hot water demand in the central heating circuit due to thermo-siphon of the second pump in the central heating circuit. Place a check valve (in the case of thermo-siphon) or a two-way valve (if there is a second pump). |

| POSSIBLE CAUSES | ANALYSIS | POSSIBLE SOLUTION |
|---|---|---|
| Central heating pressure is too low. | → Yes<br>↓No | Top off the central heating system until the central heating pressure is between 1 and 2 bar. |
| *The flue is blocked.* | → Yes | Check the flue. |

## 5.4.6 Burner ignites loudly

| POSSIBLE CAUSES | ANALYSIS | SOLUTION |
|---|---|---|
| Inlet pressure is too high. | → Yes<br>↓No | The home pressure regulator may be defective. In that case, contact the energy company. |
| Ignition distance is incorrect. | → Yes<br>↓No | Replace the ignitor including the ignition cable. |
| Gas-air control is not correctly adjusted. | → Yes | Check and/or replace the ignition cable.<br>Replace the ignition unit in the top cover.<br>Replace the ignitor. |

## 5.4.7 Burner resonates

| POSSIBLE CAUSES | ANALYSIS | SOLUTION |
|---|---|---|
| Gas inlet pressure lower than 5“ w.c. or sometimes disappears. | → Yes<br>↓No | The home pressure regulator may be defective. Contact the energy company. |
| There is recirculation of flue gases. | → Yes<br>↓No | Check the flue and air supply duct. |
| Gas-air control is not correctly adjusted. | → Yes<br>↓No | Check the adjustment |
| Burner seal is defective. | → Yes<br>↓No | Replace the burner seal. |
| Burner is defective. | → Yes | Replace the burner. |

# 6.0 DIAGRAMS

## 6.1 - PARTS DIAGRAMS

## 6.2 - WIRING DIAGRAMS

# 6.1 PARTS DIAGRAMS

## SFC Series modulating unit - Parts assembly

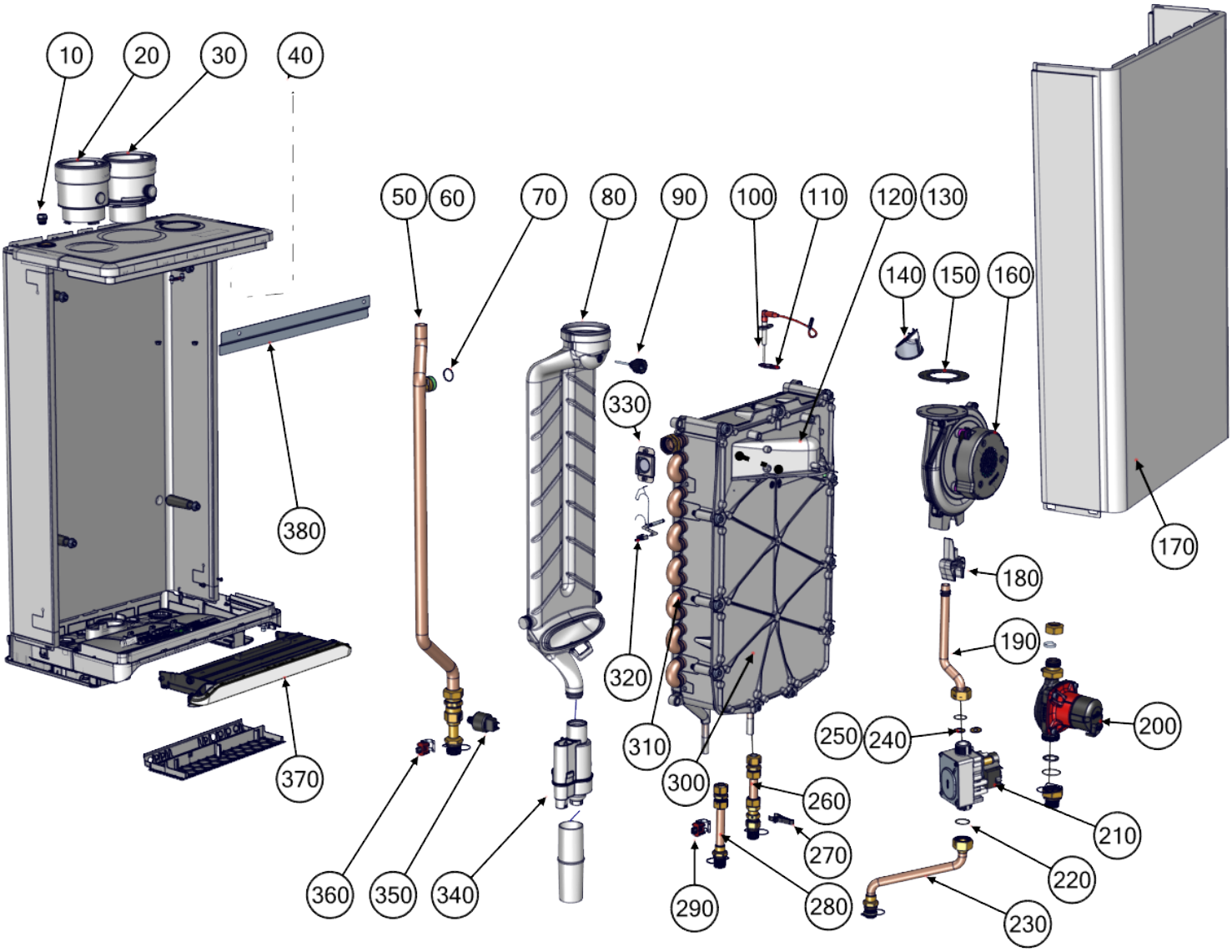


*Diagram 6.1-1: Unit assembly parts*

For information on the contents of P-kits, visit the Technical Information portal at www.ibcboiler.com.

| BOM ID | Part Description | Part # | Replacement Kit Numbers |
|---|---|---|---|
| 10 | *Manual air vent* | 180-227 | P-808 |
| 20 | *Combustion air intake fitting and screen* | 250-776A1 | P-809 |
| 30 | *Flue exhaust fitting* | 250-775A1 | P-810 |
| 40 | *Ignition module* | 180-202 | P-811 |
| 50 | *Boiler supply water pipe* | 180-240 | P-812 |
| 60 | *- fitting supply tube* | 180-234 | |
| | *- Fitting UNF 7/8"x 22mm* | 180-235 | |
| | *- Nut spring clamp 22mm* | 180-236 | |
| | *- Spring clamp 22mm* | 180-237 | |
| | **- O-ring 22.3x2.4 EPDM70* | 180-238 | |
| 70 | **Supply water pipe gasket* | 250-635 | |
| 80 | *Rear flue duct* | 250-778A1 | P-889 |
| | *Flue / Heat EX Gasket* | 150-312 | |
| | *Flue Pipe Outlet Gasket* | 150-313 | |
| 90 | *Flue gas temperature sensor* | 180-205 | P-814 |
| | **NTC shaft 1/8" SW15* | 150-314 | |
| 100 | *Ignitor and cable* | 240-115 | P-815 |
| 110 | **Ignitor gasket* | 250-622A1 | |
| 120 | *Burner* | 180-114 | P-712 |
| 130 | **Burner gasket* | 250-646A1 | |
| | *Screws x 4* | 150-344 | |
| | *Spring* | 150-241 | |
| | *O-ring* | 150-343 | |
| 140 | *Backflow valve* | 180-178 | P-817 |
| | **Backflow valve flapper (viton)* | 180-184 | |
| 150 | **Fan gasket* | 250-627A1 | P-818 |
| 160 | *Fan* | 240-120 | |
| 170 | *Front panel assembly 99/125* | 180-262 | P-886 |
| 180 | *Venturi insert SFC 99 # 528* | 180-132 | P-820 |
| | *Venturi insert SFC 125 # 500* | 180-133 | P-821 |
| 190 | *Gas line (gas valve to fan)* | 180-210 | P-822 |
| | *Gas line O-ring* | 150-245 | |
| 200 | *Boiler pump, SFC* | 180-130 | P-823 |
| | **Pump gasket x 2* | - | |

* See next page for gasket package for SFC-99/125; includes all gaskets asterisked above

| BOM ID | Part Description | Part # | Replacement Kit Numbers |
|---|---|---|---|
| *210* | *Gas valve* | 180-215 | P-824 |
| | *Inlet gasket* | 150-206 | |
| | *Outlet O-ring* | 150-175 | |
| *220* | *Inlet gasket* | 150-206 | P-825 |
| *230* | *Inlet gas tube* | 180-218 | |
| *240* | **O-ring & orifice* | 150-175 | [all conversion kits 250 below] |
| *250* | *Orifice - Natural Gas SFC 99 - #392* | 180-216 | P-805 |
| | *Orifice - Natural Gas SFC 125 - #450* | 180-228 | P-807 |
| | *Orifice- Propane SFC 99 - #315* | 180-217 | P-804 |
| | *Orifice- Propane SFC 125 - #370* | 180-229 | P-806 |
| | *Alternative low calorific Natural Gas Orifice - SFC 99 - #426* | 180-265 | P-839 |
| | *Alternative low calorific Natural Gas Orifice - SFC 125 - #490* | 180-266 | P-840 |
| *260* | *Supply pipe (cold)* | 180-240 | P-826 |
| | *DHW Flow sensor housing + propeller* | 180-241 | P-827 |
| *270* | *DHW Flow Sensor* | 240-122 | P-849 |
| *280* | *DHW supply pipe* | 190-219 | P-828 |
| *290* | *DHW temperature sensor* | 240-070 | P-729 |
| *300* | *Heat exchanger refractory plate* | 170-118 | P-883 |
| *310* | *Heat exchanger* | 180-225 | P-831 |
| | **Heat exchanger gasket* | 255-073 | |
| *320* | *Supply temperature sensor heat exchanger* | 180-206 | P-832 |
| *330* | *Sight glass* | 250-626 | P-730 |
| *340* | *Condensate trap* | 180-224 | P-884 |
| *350* | *Boiler pressure sensor* | 180-221 | P-834 |
| *360* | *Boiler supply water temperature sensor* | 240-178 | P-888 |
| *370* | *Control unit* | 180-247 | P-855 |
| *380* | *Boiler mounting bracket* | 250-809 | P-837 |
| * | Gasket package for SFC-99/125; includes all gaskets asterisked above | | P-838 |

# 6.2 WIRING DIAGRAMS

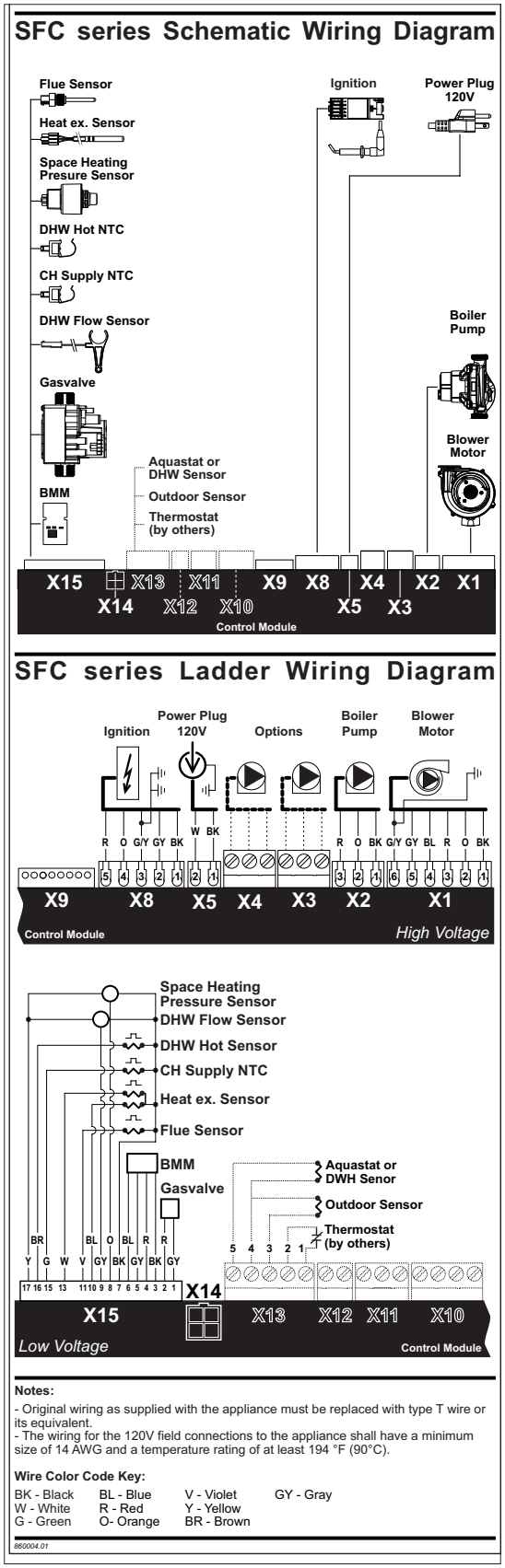


*Diagram 6.2-1: Pictorial wiring diagram*

# INSTALLATION & COMMISSIONING REPORT

## Unit Details:

**Model Number** _____ **Serial Number** _____

**Date of Installation** _____ **Address of installation** _____

_____

**User contact information** _____

**Installer Information** Company _____

Address _____

Phone/Fax/E mail _____

**Fuel** ☐ Natural Gas ☐ Propane

**Gas Supply Pressure (high fire)** _____ Inches w.c. **Measured Rate of Input (high fire)** _____ Btu/hr

☐ Installation instructions have been followed and completed (Section 1 of Installation and Operating Instructions).

☐ Check-out procedures have been followed and completed (Section 3 of Installation and Operating Instructions).

☐ Leak testing completed ☐ gas piping ☐ venting system ☐ Fan and combustion components

☐ System Cleaned and Flushed (type of cleaner used) _____

☐ System Filled (type/concentration of any glycol/chemicals used) _____

☐ Air purge completed

☐ Relief Valve correctly installed and piped ☐ Relief valve “try lever” test performed

☐ Condensate trap filled ☐ Condensate drain clear and free flowing ☐ Condensate Neutralization? Yes/No

☐ Ignition Safety Shutoff test completed. Flame current reading - High fire _____ µA - Low fire _____ µA

☐ Owner advised and instructed in the safe operation and maintenance of the unit and system.

☐ Information regarding the unit and installation received and left with owner

## Combustion Readings - recommended, but optional (<u>required</u> for fuel conversion):

$CO_2$ _____ % $O_2$ _____ % CO _____ ppm

Flue temperature _____ Return water temperature (measure simultaneously with flue temp.) _____

**Installers: send this completed sheet - Fax to 604 877 0295 - or - scan and Email to info@ibcboiler.com.**

*Commissioning has been completed as listed on this report* - Installer Signature _____

# SERVICE RECORD

| DATE | LICENSED CONTRACTOR | DESCRIPTION OF WORK DONE |
|---|---|---|
| | | |
| | | |
| | | |
| | | |
| | | |
| | | |
| | | |
| | | |
| | | |
| | | |
| | | |
| | | |
| | | |
| | | |
| | | |
| | | |
| | | |
| | | |
| | | |
| | | |
| | | |
| | | |
| | | |
| | | |
| | | |
| | | |
| | | |
| | | |
| | | |
| | | |

## IMPORTANT

This unit is equipped with a feature that saves energy by reducing the unit's water temperature as the heating load decreases. This feature is equipped with an override which is provided primarily to permit the use of an external energy management system that serves the same function. THIS OVERRIDE MUST NOT BE USED UNLESS AT LEAST ONE OF THE FOLLOWING CONDITIONS IS TRUE:

- An external energy management system is installed that reduces the unit's water temperature as the heating load decreases.
- This unit is not used for any space heating.
- This unit is part of a modular or multiple unit system having a total input of 300,000 BTU/hr or greater.
- This unit is equipped with a tankless coil.

**US installers should contact IBC for any further information required.**

# REVISION HISTORY

| | | |
|---|---|---|
| **R0** | **DECEMBER 2018** | Initial release |
| R1 | **MARCH 2019** | Miscellaneous minor revisions made. |
| R2 | **APRIL 2019** | References to maintaining the units. |
| R3 | **JUNE 2019** | Updated drawings and made minor textual changes. |
| R4 | **NOVEMBER 2019** | Concept drawings and tables on water quality. |
| R5 | **MARCH 2020** | Updated table 5, figures 1b, 2, 36 and 45. |
| R6 | **JUNE 2020** | Updated part descriptions and numbers |

**IBC Technologies Inc.**

8015 North Fraser Way
Burnaby, BC
Canada V5J 5M8

**Toll Free:** 1.844.432.8422

Tel: 604.877.0277
Fax: 604.877.0295

**www.ibcboiler.com**

**120-236-R6**
**84100406**

June 2020
© IBC Technologies Inc. 2020

**IBC Technologies USA Inc.**

1702 Taylors Lane
Cinnaminson, NJ 08077
USA

Tel: 856.887.0544
Fax: 856.735.5584

**www.usa.ibcboiler.com**