WARDFlex®

WARDFlex MAX

DESIGN AND INSTALLATION GUIDE

CORRUGATED STAINLESS STEEL TUBING FUEL GAS* PIPING

*Includes Natural Gas and Propane

WARD MFG

P.O. BOX 9
BLOSSBURG, PA. 16912
570 638-2131
WWW.WARDMFG.COM

Rev. 13 November 2017 ©Ward Manufacturing, LLC. All Rights Reserved.
Written in accordance with ANSI-LC 1 the Standard for Fuel Gas Piping Systems Using Corrugated Stainless Steel Tubing.

IMPORTANT READ ENTIRE MANUAL

TABLE OF CONTENTS

1.0 Introduction 5
1.1 User Warnings 5
1.2 Limitations of Manual 6
1.3 Listing of Applicable Codes and Standards 6

2.0 Description of Systems and Components 7
2.1 System Description 7
2.1.1 WARDFlex®/WARDFlex®MAX Corrugated Stainless Steel Tubing (CSST) 7
WARDFlex®/WARDFlex®MAX Fittings Description 8
2.2 WARDFlex®/WARDFlex®MAX Components 9
2.2.1 WARDFlex®/WARDFlex®MAX Description & Sizes 9
2.2.2 Fittings 10
Mechanical Joints (Male Straight & Reducing, Female Straight & Reducing) 10
Couplings 11
Mechanical Tees (Straight & Reducing, Female Straight & Reducing) 11
Adapter Nut 12
Termination Fittings (Male Indoor and Outdoor, Female Indoor and Outdoor 12
Floor Flange Termination Assemblies Male 12
2.2.3 Protection Devices 13
Striker Plates 13
Stripwound Conduit 13
2.2.4 Pressure Regulators 13
2.2.5 Manifolds 14
2.2.6 Shutoff Valves 15
2.2.7 Other Components 16
Appliance, Meter and Fireplace Stubouts 16
Manifold Bracket 16
Right Angle Mounting Bracket 17
Gas Outlet Box 17
Quick Connects 17
Bonding Clamps 17

3.0 System Configuration and Sizing 18
3.1 System Overview 18
3.1.1 Introduction 18
3.1.2 System Design 18
3.2 System Configurations 18
3.2.1 Introduction 18
3.2.2 Series Systems 19
3.2.3 Parallel Systems 19
3.2.4 Dual Pressure Systems 20
3.2.5 Hybrid Systems 20
3.2.6 Elevated Pressure System 21
3.3 System Sizing 21
3.3.1 Introduction 21
3.3.2 Longest Length Method 21
Low Pressure Parallel System Example 22
Low Pressure Series System Example 23
Dual Pressure Parallel System 24
Hybrid System Example 25
3.3.3 Summation Sizing Method 26
Low Pressure Example 26
3.3.4 Wardflex Sizing Software 27

4.0 Installation Practices 28
4.1 General Installation Practices 28
Bend Radius 28
Chemicals to Avoid 29
4.2. Fitting Assembly 30
4.2.1 WARDFlex®/WARDFlex®MAX Stepsaver Fitting 30
4.2.2 WARDFlex®/WARDFlex®MAX Fitting Reassembly 31
4.3. Tubing Routing 32
4.3.1 Vertical Runs 32
4.3.2 Horizontal Runs 32
4.3.3 Clearance Holes and Notching 32
4.3.4 Concealed Locations For Fittings 33
4.3.5 Modification to Existing System 34
4.3.6 Outdoor Installations 34
4.3.7 Fire Rated Construction 34
Firestop Listings 35
4.4 Protection 36
4.4.1 Introduction 36
4.4.2 Striker Plates 36
4.4.3 Stripwound Metal Conduit 39
4.4.4 Installation in Insulated Walls 40
4.5 Meter-Connections 41
4.5.1 Unsupported Meters 41
4.5.2 Self Supported Meter 42

TABLE OF CONTENTS

4.6 Appliance Connections ... 43
4.6.1 Moveable Appliances ... 43
4.6.2 Non-Moveable Appliance ... 44
4.6.3 Outdoor Appliances-Barbeque Grill and Gas Light Connection ... 44
4.6.4 Special Applications ... 45
Roof Top Installations ... 45
Infared Heaters ... 46
Pad Mounted Gas Appliances ... 47
4.6.5 Gas Fireplaces ... 48
4.7 Manifold Station ... 49
4.8 Pressure Regulators ... 50
4.8.1 Installation Requirements ... 50
4.8.2 Regulator Venting Requirements ... 51
Vent Lines ... 51
4.8.3 Regulator Adjustment ... 52
4.8.4 Over Pressurization Protection ... 52
4.9 Underground Installations ... 52
4.9.1 General Information ... 52
Burial Depths and Conduit Termination Height ... 53
4.10 CSST Electrical Bonding ... 54

5.0 Inspection, Repair and Replacement ... 56
5.1 Minimum Inspection Requirements (Checklist) ... 56
5.2 Repair/Replacement of Damaged Tubing ... 56

6.0 Testing ... 58
6.1 Pressure Testing and Inspection Procedure ... 58

7.0 Sizing Tables (Natural and LP) Table of Contents ... 59
7.1 Natural Gas-Low Pressure ... 60-64
Table A-1 Natural Gas-Low Pressure 0.5 PSI or less and Pressure Drop of 0.5 in.WC ... 60
Table A-2 Natural Gas-Low Pressure 0.5 PSI or less and Pressure Drop of 1.0 in.WC ... 60
Table A-3 Natural Gas-Low Pressure 0.5 PSI or less and Pressure Drop of 1.5 in.WC ... 61
Table A-4 Natural Gas-Low Pressure 0.5 PSI or less and Pressure Drop of 2.0 in.WC ... 61
Table A-5 Natural Gas-Low Pressure 0.5 PSI or less and Pressure Drop of 2.5 in.WC ... 62
Table A-6 Natural Gas-Low Pressure 0.5 PSI or less and Pressure Drop of 3.0 in.WC ... 62
Table A-7 Natural Gas-Low Pressure 0.5 PSI or less and Pressure Drop of 4.0 in.WC ... 63
Table A-8 Natural Gas-Low Pressure 0.5 PSI or less and Pressure Drop of 5.0 in.WC ... 63
Table A-9 Natural Gas-Low Pressure 0.5 PSI or less and Pressure Drop of 6.0 in.WC ... 64
7.2 Natural Gas-Elevated Pressure ... 65-67
Table A-10 Natural Gas-Elevated Pressure 1.0 PSI and Pressure Drop of 13.0 in.WC ... 65
Table A-11 Natural Gas-Elevated Pressure 2.0 PSI and Pressure Drop of 1.0 PSI ... 65
Table A-12 Natural Gas-Elevated Pressure 2.0 PSI and Pressure Drop of 1.5 PSI ... 66
Table A-13 Natural Gas-Elevated Pressure 5.0 PSI and Pressure Drop of 3.5 PSI ... 66
Table A-14 Natural Gas-Elevated Pressure 10.0 PSI and Pressure Drop of 7.0 PSI ... 67
Table A-15 Natural Gas-Elevated Pressure 25.0 PSI and Pressure Drop of 10.0 PSI ... 67
7.3 Propane Gas-Low Pressure ... 68-70
Table A-16 Propane Gas-Low Pressure 0.5 PSI or less and Pressure Drop of 0.5 in.WC ... 68
Table A-17 Propane Gas-Low Pressure 0.5 PSI or less and Pressure Drop of 1.0 in.WC ... 68
Table A-18 Propane Gas-Low Pressure 0.5 PSI or less and Pressure Drop of 2.0 in.WC ... 69
Table A-19 Propane Gas-Low Pressure 0.5 PSI or less and Pressure Drop of 2.5 in.WC ... 69
Table A-20 Propane Gas-Low Pressure 0.5 PSI or less and Pressure Drop of 3.0 in.WC ... 70
Table A-21 Propane Gas-Low Pressure 0.5 PSI or less and Pressure Drop of 6.0 in.WC ... 70
7.4 Propane Gas-Elevated Pressure ... 71-72
Table A-22 Propane Gas-Elevated Pressure 2.0 PSI and Pressure Drop of 1.0 PSI ... 71
Table A-23 Propane Gas-Elevated Pressure 5.0 PSI and Pressure Drop of 3.5 PSI ... 71
Table A-24 Propane Gas-Elevated Pressure 10.0 PSI and Pressure Drop of 7.0 PSI ... 72
Table A-25 Propane Gas-Elevated Pressure 25.0 PSI and Pressure Drop of 10.0 PSI ... 72
7.5 Steel Pipe Capacities ... 73
Table A-26 Steel Pipe Capacities Pressure 0.5 PSI or less and Pressure Drop of 0.5 in.WC ... 73
Table A-27 Steel Pipe Capacities Pressure 0.5 PSI or less and Pressure Drop of 1.0 in.WC ... 73
7.6 Pressure Drop Per Foot ... 74-83
Table A-28 WARDFLEX/WARDFlex®MAX Pressure Drop per Foot ... 74-75
Table A-29 SCHEDULE 40 Black Iron Pipe Pressure Drop per Foot ... 76-77
Table A-30 Polyethylene Pipe Pressure Drop per Foot ... 78-79
Table A-31 WARDFLEX/WARDFlex®MAX Pressure Drop per Foot Propane Gas ... 80-81
Table A-32 SCHEDULE 40 Black Iron Pipe Pressure Drop per Foot Propane Gas ... 82-83

8.0 Definitions ... 84
8.1 Definitions of Terminology in this Guide ... 84-85

Appendix A ... 86
Table A-33 Specific Gravity Correction Factors ... 86
Table A-34 Natural Gas Flow in CFH ... 87
Table A-35 Propane Flow in CFH ... 88

Appendix B.. ... 89

ATTENTION!

1. The installation of WARDFlex®/WARDFlex®MAX Flexible Gas piping must be performed by a trained installer who has successfully completed the WARDFlex® training program. The installer must also meet all qualifications required by the state and/or local administrative authority administering the provisions of the code where the gas piping is installed.
2. All piping systems using WARDFlex®/WARDFlex®MAX shall be designed and installed according to the requirements of this guide.
3. Only WARDFlex®/WARDFlex®MAX components may be used in the system. Components from other CSST systems are not interchangeable. Only components supplied or specified by Ward Manufacturing shall be used.
4. Installation shall be in accordance with local codes, or in their absence, in accordance with the National Fuel Gas Code ANSI Z223.1 in the USA, and CAN/CGA - B149.1 & B149.2 in Canada. In cases where the requirements of this guide are in conflict with the local code, the local code must take precedence, unless the local authority having jurisdiction approves a variance, or change.
5. Inspection, testing, and purging shall be performed according to the procedures in Part 4 of the National Fuel Gas Code, ANSI Z223.1, and/or - B149 installation Codes or in accordance with local codes.
6. This system and related components shall be used only in gas piping systems where the operating gas pressure does not exceed 25 psig.
7. WARDFlex & WARDFlex MAX® tubing with covering may be installed in or routed through air plenums, ducts, or other areas which may be limited by building codes to materials having maximum ASTM E84 ratings of 25 Flame Spread and 50 Smoke Density. Other procedures are to be followed by the installer to meet local building codes with respect to Flame Spread and Smoke Density regulations for nonmetallic materials.
8. Tubing may be routed through concrete floors or walls, provided it is encased in previously embedded non-metallic, liquid tight conduit approved for underground use. Tubing shall not be buried directly underground.
9. The CSST is typically routed:
   - Beneath, through and alongside floor joists
   - Inside interior wall cavities
   - On top of ceiling joists in attic space
10. Carefully unwind and route the tubing from the reel to the required location, making certain not to kink, tangle or apply excessive force.
11. Tubing end must be temporarily capped or taped closed prior to installation to prevent contamination from foreign material.
12. When installing WARDFlex®/WARDFlex®MAX avoid sharp bends, stretching, kinking, twisting, or contacting sharp objects. The tubing shall be replaced if damage occurs.

IMPORTANT - READ ENTIRE MANUAL

This document is the sole property of WARD MANUFACTURING, LLC. It shall not be copied or reproduced without the prior permission of WARD MANUFACTURING, LLC.

1.1 USER WARNINGS (see ANSI LC 1-CSA 6.26)

The use of fuel gas can be dangerous. Special attention must be given to the proper design, installation, testing and application of the gas piping system. Sound engineering practices and principles must be exercised, as well as diligent adherence to the proper installation procedures to ensure the safe operation of the piping system. All installed systems must pass customary installation inspections by the local building official having authority prior to being placed into service.

This document is intended to provide the user with general guidance when designing and installing a WARDFlex®/WARDFlex®MAX corrugated stainless steel tubing gas system. Its use with any other gas tubing system is inappropriate and may result in serious bodily injury and property damage. Where local gas or building codes impose greater requirements than this document, you should adhere to the local code requirements. Performance of accessory devices, such as pressure regulators and shut off valves, should be reconfirmed by contacting the accessory device manufacturer and receiving the latest technical data on sizing, installation, and performance.

Improper installation methods or procedures could lead to accidents such as explosions, fires, gas poisoning, asphyxiation, etc. This system shall be installed with strict adherence to this guide as well as local building codes. All installed systems must pass installation inspections by the authorized local building official prior to being placed in service. Ward Manufacturing, LLC shall have no responsibility for any misinterpretation of the information contained in this guide or any improper installation or repair work or other deviation from procedures recommended in this manual, whether pursuant to local building codes or engineering specifications or otherwise.

Only those components designed and made for or specified for use in this system shall be used in its installation. WARDFlex®/WARDFlex®MAX components and tubing shall not be used with other corrugated stainless steel tubing system components from other manufacturers.

WARDFlex®/WARDFlex®MAX shall be used only in gas piping systems where the operating gas pressure does not exceed 25 PSI. Accessories for systems shall be rated for the operating gas pressure used. Thus, for example, accessories for 25 PSI systems shall be rated for 25 PSI service. Performance of accessory devices, such as pressure regulators and shut-off valves should be reconfirmed by contacting the accessory device manufacturer and receiving the latest technical data on sizing, installation and performance.

Certain chemicals are corrosive to WARDFlex®/WARDFlex®MAX. See Section 4.1 of the current manual for more specific information on this topic.

A gas delivery system consisting of WARDFlex®/WARDFlex®MAX offers significant advantages over other gas delivery systems because of its wall dimensions and corrugated design. In contrast to rigid steel pipe, WARDFlex®/WARDFlex®MAX does not require intermediate joints in most installations because the tubing is capable of being installed in one continuous run, reducing not only the total number of joints, but also the potential for leaks at joints. WARDFlex®/WARDFlex®MAX's flexibility also affords more installation options because an installer can avoid existing obstacles, and it eliminates the repetitive measuring, cutting, threading and joint assembly that are common with installation of rigid steel piping systems. WARDFlex®/WARDFlex®MAX's flexibility offers even further safety advantages in geographic areas that are prone to seismic activity because the tubing provides greater flexibility to withstand certain movement of the ground or structural shifts.

Although WARDFlex®/WARDFlex®MAX provides significant advantages over more rigid gas delivery systems, its wall dimensions may make it more likely than steel pipe to be punctured by a nail or other sharp objects, or damaged by other extraordinary forces such as a lightning strike, depending on the circumstances. It is well known that lightning is a highly destructive force. Therefore, the user must ensure that the system is properly bonded. In order to maximize protection of the entire structure from lightning damage, the user should consider installation of a lightning protection system per NFPA 780 and other standards, particularly in areas prone to lightning. Note that lightning protection systems as set forth in NFPA 780 and/or other standards go beyond the scope of this manual. Users of WARDFlex®/WARDFlex®MAX should consider all of the limitations and benefits of WARDFlex®/WARDFlex®MAX for their particular situation. Installers shall provide building owners and electricians with the required WARDFlex®/WARDFlex®MAX Information Card discussing these limitations and benefits.

1.2 LIMITATIONS OF MANUAL

This document is intended to aid the user in the design, installation and testing of WARDFlex®/WARDFlex®MAX Corrugated Stainless Steel Tubing to distribute fuel gas in residential housing units and commercial structures. It would be impossible for this guideline to anticipate and cover every possible variation in housing configurations and construction styles, appliance loads and local restrictions. Therefore, there may be applications which are not covered in this guide. For applications beyond the scope of this guide, contact Ward Manufacturing's Engineering Department. The techniques included within this guide are recommended practice for generic applications. These practices must be reviewed for compliance with all applicable local fuel gas and building codes. Accordingly, where local gas or building codes impose greater requirements than this manual, you should adhere to the local code requirements. This system and related components should be used only as fuel gas piping where the operating gas pressure does not exceed 25 PSI.

In CANADA the installation of CSA-CGA certified WARDFlex®/WARDFlex®MAX flexible gas tubing for natural and propane gas piping systems must be in accordance with the applicable sections of the current CAN/CGA-B 149.1 or .2 installation codes, and the requirements or codes of the local utility or other authority having jurisdiction. All gas components used in conjunction with the gas tubing must be certified for use in Canada.

1.3 LISTING OF APPLICABLE CODES & STANDARDS (See www.wardmfg.com for More Information)

Standards

- ANSI LC 1, CSA 6.26 Fuel Gas Piping Systems Using Corrugated Stainless Steel Tubing (CSST)

Listings

- CSA. - Canadian Standard Association Certificate #1004880
- IAPMO - International Association of Plumbing and Mechanical Officials - File Number 3353
- UL - Classified Mark File #R18357
- ICC - International Codes Council ESR-1879 & PMG 1100

Code Compliance

- BOCA - National Mechanical Code
- ANSI/CABO 2.0 - One and Two Family Dwelling Code
- ICC - International Mechanical Code
- NFPA 54- National Fuel Gas Code
- NFPA 58- Standard for the Storage and Handling of Liquified Petroleum Gasses
- SBCCI - Southern Building Code Congress International
- UMC - Uniform Mechanical Code
- C/UPC TM - California/Uniform Plumbing Code
- Canada Natural Gas and Propane Codes B149.1 and B149.2

IMPORTANT - READ ENTIRE MANUAL

This document is the sole property of WARD MANUFACTURING, LLC. It shall not be copied or reproduced without the prior permission of WARD MANUFACTURING, LLC.

2.1 SYSTEM DESCRIPTION

2.1.1 WARDFlex®/WARDFlex®MAX SYSTEM DESCRIPTION

WARDFlex® Tubing:

The WARDFlex® Corrugated Stainless Steel Tubing (CSST) Piping System has been engineered, tested and certified to meet the performance requirements of American National Standard for Fuel Gas Systems Using Corrugated Stainless Steel Tubing, ANSI LC-1. As such is acceptable for use with all recognized fuel gases, including natural gas and propane (LPG).

- Manufactured using a 304 alloy stainless steel per ASTM A240.
- Fully annealed; increasing flexibility, facilitating installation in tight locations, and reduced product-memory to avoid rapid uncoiling when unbanned from spools.
- The CSST is jacketed with a non-metallic coating to ease installation when running through studs, joists, and other building components.
- Jacketing material includes UV inhibitors making it suitable for outdoor installations.
- Jacket utilizes flame retardants making it ASTM E84 compliant.
- Coating is marked at 2 foot intervals allowing for quick measurements.
- WARDFlex® sizes 15A through 50A are certified for working pressures up to 25 PSI. WARDFlex 10A is certified for working pressures up to 5 PSI in accordance with ANSI LC-1, by CSA International.

WARDFlex®MAX Tubing:

The WARDFlex®MAX Corrugated Stainless Steel Tubing (CSST) Piping System has been engineered, tested and certified to meet the performance requirements of American National Standard for Fuel Gas Systems Using Corrugated Stainless Steel Tubing, ANSI LC-1. As such is acceptable for use with all recognized fuel gases, including natural gas and propane (LPG).

- Manufactured using a 304 alloy stainless steel per ASTM A240.
- Fully annealed; increasing flexibility, facilitating installation in tight locations, and reduced product memory to avoid rapid uncoiling when unbanned from spools.
- The CSST is jacketed with a non-metallic coating to ease installation when running through studs, joists, and other building components.
- Jacketing material includes UV inhibitors making it suitable for outdoor installations.
- Jacket utilizes flame retardants making it ASTM E84 compliant.
- Coating is marked at 2 foot intervals allowing for quick measurements.
- WARDFlex® MAX is certified for working pressures up to 25 PSI in accordance with ANSI LC-1, by CSA International.

Fittings:

The 3/8" thru 1-1/4" tubing is terminated using the patented, STEPSAVER double seal fitting. The 1-1/2" and 2 utilize the WARDFlex® traditional gasketed fitting design. Only fittings designed and listed for use with the WARDFlex® and WARDFlex®MAX CSST Piping Systems shall be used when connecting to the flexible piping.

- WARDFlex® fittings come standard with ASME B1.20.1 male or female NPT thread connection to be used in combination with other approved fuel gas piping materials with ASME B1.20.1 threaded pipe connections.
- Fittings are manufactured from EN 12164 compliant brass, and ASTM A197 malleable iron. Depending on type of malleable iron fitting, coating will be either black e-coat or electroplated zinc (ASTM B633).
- The 3/8" thru 1-1/4" STEPSAVER fittings provide a reliable, reusable dual seal that features a primary metal to metal seal with a secondary gasket seal.
- The 1-1/2" and 2" fittings utilize a reliable gasket seal. Fitting should be examined prior to reuse for damage to gasket. If the gasket has been damaged during prior assembly it is recommended that it be replaced prior to re-assembly.

Protection Devices:

Protective devices are to be used when CSST passes through studs, joists, or other building materials that limit or restrict the movement of the flexible piping making it susceptible to physical damage from nails, screws, drill bits and other puncture threats

- Case Hardened Striker plates attach directly to studs and joists.
- Strip wound metallic conduit can be used in locations where additional protection may be required.

Pressure Regulators:

Required to be used to reduce elevated pressure, over 14 inches water column (1/2 PSI,) to standard low pressure required for most appliances.

Manifolds:

Multiport gas distribution manifolds supply multiple gas appliances in parallel arrangement from a main distribution point.

- Multiple sizes and configurations ranging in female NPT sizes ½ through 2 with 3, 4 and 6 port cross manifold configurations.
- Material is ASTM A197 Malleable Iron coated with black e-coating finish.

Shutoff Valves:

Used to control the gas flow. Ball valves shut off the gas supply at appliances, manifolds, & regulators. WARDFlex® Valves can be utilized at manifold locations reducing the number of joints due to the integrated WARDFlex® STEPSAVER fitting connection.

Other Components/Accessories:

CSST systems have a variety of hardware and design differences from conventional gas piping systems using rigid steel and copper tubing. To address these differences a variety of accessories are available.

- Appliance and meter stub outs, manufactured from schedule 40 steel pipe and fitted with a steel mounting plate, are used to create a fixed termination point on a wall or floor to allow the attachment of appliances or a meter.
- Manifold Brackets provide a fixed mounting location for manifolds. Material is 16 gauge steel.
- Gas outlet boxes use a WARDFlex® 90 degree valve and a molded plastic mounting box to provide a recessed termination point for the connection of movable appliances. Fire rated outlet box also available.

2.2 COMPONENTS

2.2.1 WARDFlex®/WARDFlex®MAX CORRUGATED STAINLESS STEEL TUBING (CSST)

COMPONENT	MATERIAL	DESCRIPTION								
		TUBING Size	**Item**	**10A**	**15A/15C**	**20A/20C**	**25A/25C**	**32A/32C**	**38A/38C**	**50A/50C**
WARDFlex® WARDFlex® MAX Corrugated Stainless Steel Tubing (CSST)	**Tubing: 304 Stainless Steel Jacket: Polyethylene**	WARDFlex® WARDFlex®MAX	Size (in.)	3/8″	1/2″	3/4″	1″	1-1/4″	1-1/2″	2″
		Equivalent Hydraulic Diameter (EHD)	EHD	15	19	25	31	39	48	62
		Inner Dia. - I.D.	In.	0.452	0.591	0.787	0.984	1.26	1.59	2.12
			(mm)	(11.50)	(15.00)	(20.00)	(25.00)	(32.00)	(40.40)	(53.80)
		Wall Thickness - t Note WARDFlex®MAX	In.	0.008	.008/.010	0.010	0.010	0.010	0.012	0.012
			(mm)	(0.20)	(.20/.25)	(0.25)	(0.25)	(0.25)	(0.30)	(0.30)
		WARDFlex® Outside Diameter of Coating – O.D. (MAX)	In.	0.663	0.828	1.088	1.321	1.636	2.136	2.676μμ
			(mm)	(16.80)	(21.00)	(27.60)	(33.50)	(41.50)	(54.30)	(68.00)
		WARDFlex®MAX Outside Diameter of Coating – O.D. (MAX)	In.	N/A	0.832	1.096	1.329	1.644	2.138	2.678
			(mm)		(21.10)	(27.80)	(33.80)	(41.80)	(54.30)	(68.00)
		WARDFlex® Available Lengths	(ft)	50*, 100*, 250*, 500*, 1000	50*, 100*, 250*,500*, 1000	50*, 100*, 180*, 250, 500	50*, 100*, 180*, 250, 500	50*, 100*, 250	50, 100, 150	50, 100, 150
		WARDFlex®MAX Available Lengths	(ft)	N/A	50*, 100*, 250*, 500	50*, 100*, 250*, 500	50*, 100*, 250, 500	50*, 100*, 250, 400	50, 100, 150	50, 100, 150

*Custom Lengths Available Upon Request.

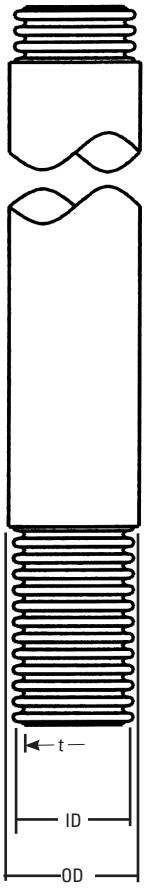

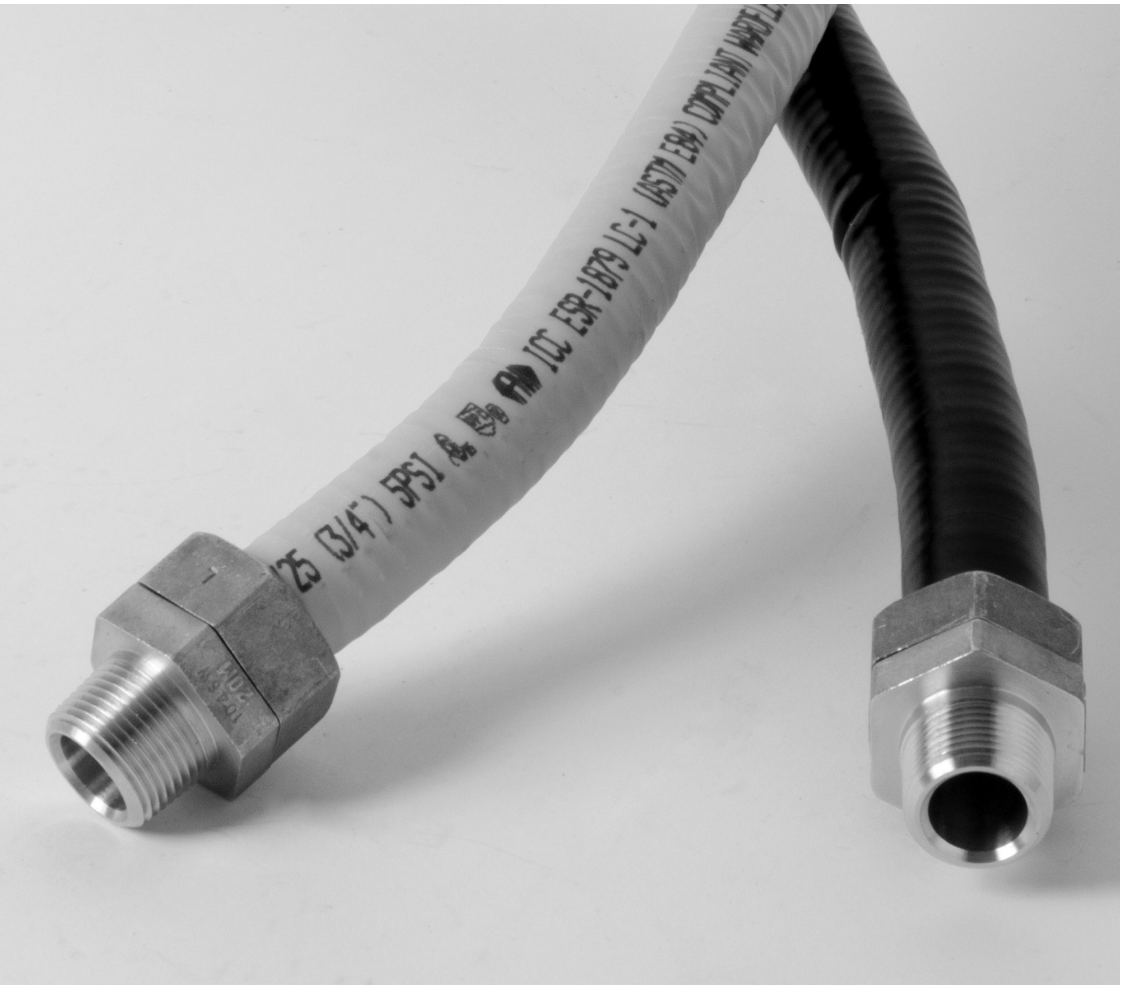

2.2.2 FITTINGS

COMPONENT	MATERIAL	CSST X NPS	
Mechanical Joints Male Straight	Body: Brass Retainer: Brass Nut: Brass Gasket: Composite Fiber	10M (3/8") x 3/8 15M (1/2") x 1/2 20M (3/4") x 3/4 25M (1") x 1 32M (1 1/4") x 1 1/4 38M (1 1/2") x 1 1/2 50M (2") x 2	

COMPONENT	MATERIAL	CSST X NPS	
Mechanical Joints Male Reducing	Body: Brass Retainer: Brass Nut: Brass Gasket: Composite Fiber	10M (3/8") x 1/2 15M (1/2") x 3/8 20M (3/4") x 1/2 25M (1") x 3/4	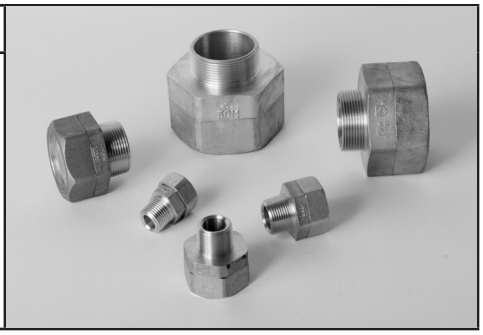

COMPONENT	MATERIAL	CSST X NPS	
Mechanical Joints Female Straight	Body: Brass Retainer: Brass Nut: Brass Gasket: Composite Fiber	15M (1/2") x 1/2 20M (3/4") x 3/4 25M (1") x 1	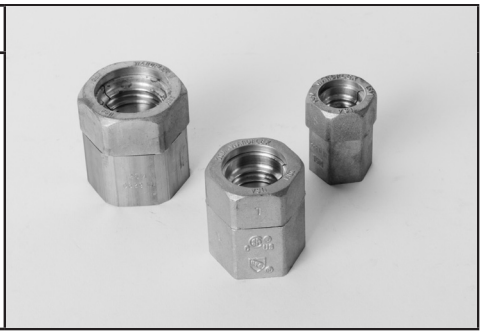

COMPONENT	MATERIAL	CSST X NPS	
Mechanical Joints Female Reducing	Body: Brass Retainer: Brass Nut: Brass Gasket: Composite Fiber	10M (3/8") x 1/2 15M (1/2") x 3/8 20M (3/4") x 1/2 25M (1") x 3/4	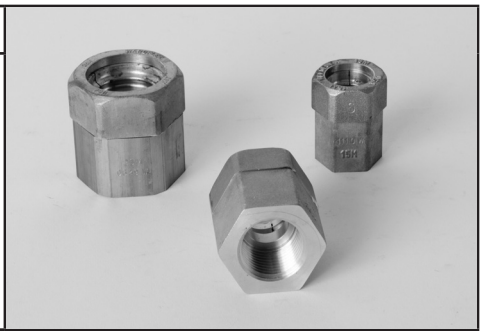

2.2.2 FITTINGS

COMPONENT	MATERIAL	CSST X CSST
Couplings	Body: Brass Retainer: Brass Nut: Brass Gasket: Composite Fiber	10M (3/8") x 10M (3/8") 15M (1/2") x 15M (1/2") 20M (3/4") x 20M (3/4") 25M (1") x 25M (1") 32M (1 1/4") x 32M (1 1/4") 38M (1 1/2") x 38M (1 1/2") 50M (2") x 50M (2")

COMPONENT	MATERIAL	CSST
Mechanical Tees Straight (CSSTx CSSTxCSST)	Body: Brass/ Malleable Iron Retainer: Brass Nut: Brass Gasket: Composite Fiber	15M (1/2") 20M (3/4") 25M (1") 32M (1 1/4") 38M (1 1/2") 50M (2")

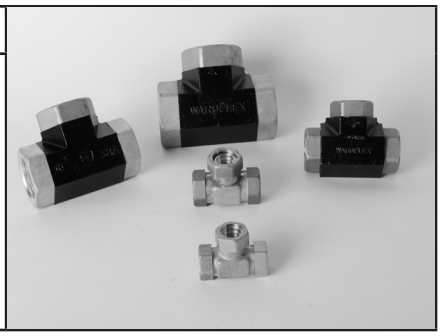

COMPONENT	MATERIAL	CSST X CSST X CSST
Mechanical Tees Reducing (CSSTx CSSTxCSST)	Body: Brass/ Malleable Iron Retainer: Brass Nut: Brass Gasket: Composite Fiber	15M (1/2") x 15M (1/2") x 10M (3/8") 15M (1/2") x10M (3/8") x 10M (3/8") 20M (3/4") x 20M (3/4") x 15M (1/2") 25M (1") x 25M (1") x 20M (3/4") 25M (1") x 20M (3/4") x 20M (3/4") 25M (1")x 25M (1") x 15M (1/2")

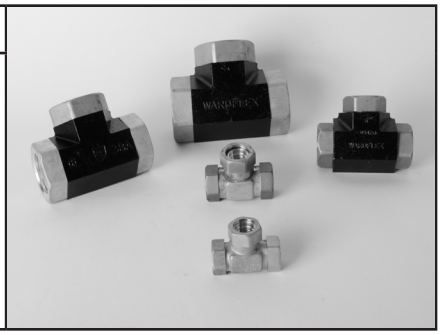

COMPONENT	MATERIAL	CSST X CSST X NPS
Mechanical Tees Female Straight (CSSTx CSSTxNPS)	Body: Brass/ Malleable Iron Retainer: Brass Nut: Brass Gasket: Composite Fiber	15M (1/2") x 15M (1/2") x 1/2 20M (3/4") x 20M (3/4") x 3/4 25M (1") x 25M (1") x 1 32M (1 1/4") x 32M (1 1/4") x 1 1/4 38M (1 1/2") x 38M (1 1/2") x 1 1/2 50M (2") x 50M (2") x 2

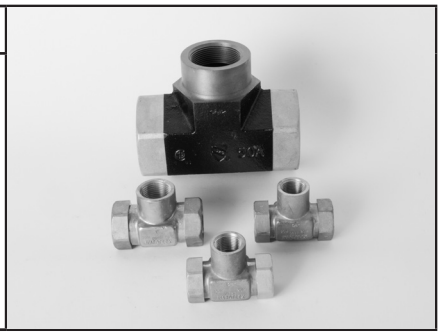

COMPONENT	MATERIAL	CSST X CSST X NPS
Mechanical Tees Female Reducing (CSSTx CSSTxNPS)	Body: Brass/ Malleable Iron Retainer: Brass Nut: Brass Gasket: Composite Fiber	15M (1/2") x 15M (1/2") x 3/8 15M (1/2") x 15M (1/2") x 3/4 20M (3/4") x 20M (3/4") x 1/2 20M (3/4") x 20M (3/4") x 1/2 25M (1") x 25M (1") x 3/4

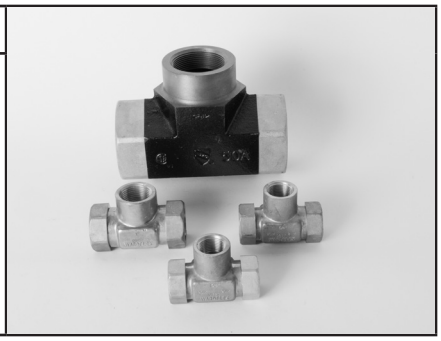

2.2.2 FITTINGS

COMPONENT	MATERIAL	CSST X NPS	
Adapter Nut	Nut: Brass Locknut: Steel	10M (3/8") x 3/4 15M (1/2") x 3/4 20M (3/4") x 1	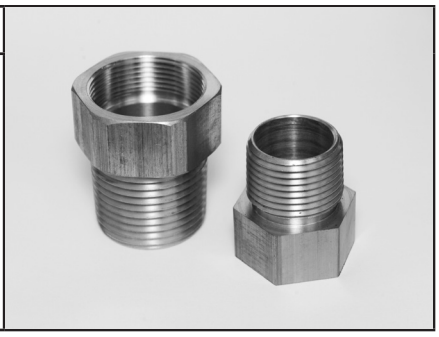

COMPONENT	MATERIAL	CSST X NPS	
Termination Fittings Male (Indoor and Outdoor*) ***Outdoor models supplied with o-rings**	Body: Brass Retainer: Brass Nut: Malleable Iron Gasket: Composite Fiber O-rings: EPDM Rubber	10M (3/8") x 1/2 15M (1/2") x 1/2 20M (3/4") x 3/4 25M (1") x 3/4 25M (1") x 1	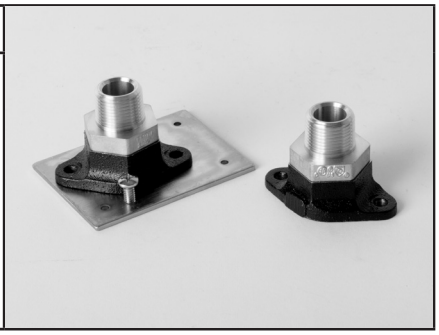

COMPONENT	MATERIAL	CSST X NPS	
Termination Fittings Female (Indoor and Outdoor*) *Outdoor models supplied with o-rings	Body: Brass Retainer: Brass Nut: Malleable Iron Gasket: Composite Fiber O-rings: EPDM Rubber	10M (3/8") x 1/2 15M (1/2") x 1/2 20M (3/4") x 3/4 25M (1") x 3/4	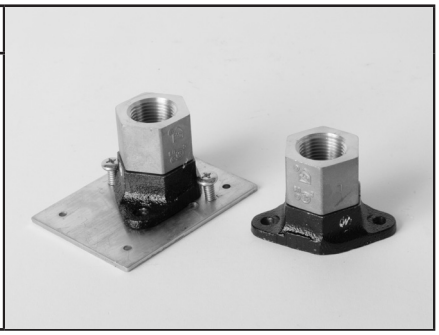

COMPONENT	MATERIAL	CSST X NPS	
Flange Termination Fittings Male **(Indoor and Outdoor*)** ***Outdoor models supplied with o-rings**	Body: Brass Retainer: Brass Nut: Malleable Iron Gasket: Composite Fiber O-rings: EPDM Rubber	10M (3/8") x 1/2 15M (1/2") x 1/2 20M (3/4") x 3/4 25M (1") x 3/4 32M (1 1/4") x 1 1/4 38M (1 1/2") x 1 1/2 50M (2") x 2	

COMPONENT	MATERIAL	CSST X NPS	
Floor Flange Termination Assemblies Male	Body: Brass Retainer: Brass Nut: Malleable Iron Gasket: Composite Fiber	10M (3/8") x 1/2 15M (1/2") x 1/2 20M (3/4") x 3/4 25M (1") x 1	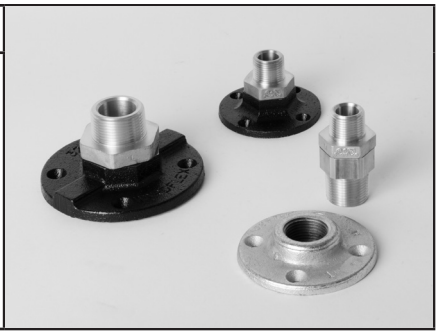

2.2.3 PROTECTION DEVICES

COMPONENT	MATERIAL	AVAILABLE SIZES
Striker Plates	Case Hardened Steel	Quarter: 1 1/2" W x 3 1/2" L Half: 2 3/4" W x 6 1/2"L Full: 2 3/4" W x 11 1/2"L Extended: 2 3/4"W x 13"L Double Top: 2 3/4"W x 7 1/4"L Large: 3 1/4"W x 17 1/2"L

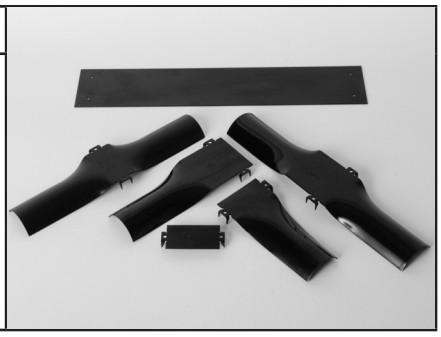

COMPONENT	MATERIAL	AVAILABLE SIZES
Stripwound Conduit	Galvanized Steel	Size (Length) 3/8" (1' and 50' L) 1/2" (1' and 50' L) 3/4" (1' and 50' L) 1" (1' and 50' L) 1 1/4" (1' and 50' L)

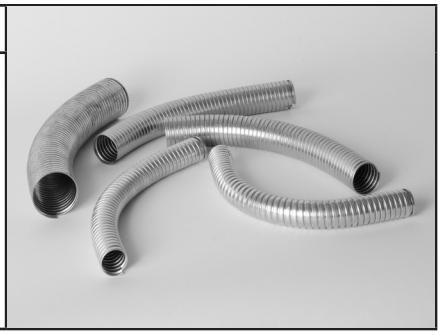

2.2.4 REGULATORS

COMPONENT	MATERIAL	AVAILABLE SIZES
2 PSI Line Pressure Regulators - Natural Gas **(Preset to 8" W.C outlet pressure)**	Body: Aluminum	**325 3D:** Port Size - 1/2 NPS x 1/2 NPS Vent Size: 1/8 NPS **325 5E:** Port Size - 3/4 NPS x 3/4 NPS Vent Size: 3/8 NPS **325 71B:** Port Size - 3/4 NPS x 3/4 NPS Vent Size: 1/2 NPS

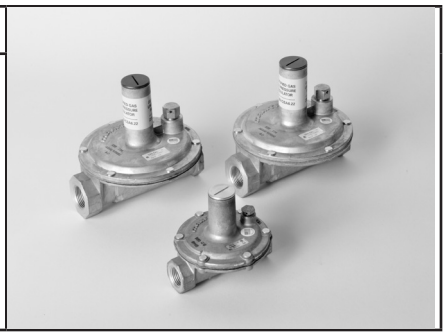

COMPONENT	MATERIAL	AVAILABLE SIZES
2 PSI Line Pressure Regulators - Propane **(Preset to 11" W.C outlet pressure)**	Body: Aluminum	**325 3DLP:** Port Size - 1/2 NPS x 1/2 NPS Vent Size: 1/8 NPS **325 5ELP:** Port Size - 3/4 NPS x 3/4 NPS Vent Size: 3/8 NPS

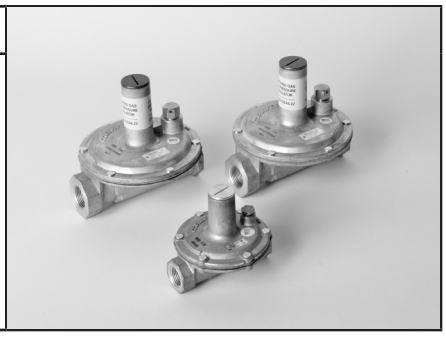

COMPONENT	MATERIAL	AVAILABLE SIZES
5 PSI Line Pressure Regulators - Natural Gas **(pre-set at 8" W.C outlet pressure)**	Body: Aluminum	**325 3D OP:** Port Size - 1/2 NPS x 1/2 NPS Vent Size: 1/8 NPS **325 5E OP:** Port Size - 3/4 NPS x 3/4 NPS Vent Size: 3/8 NPS

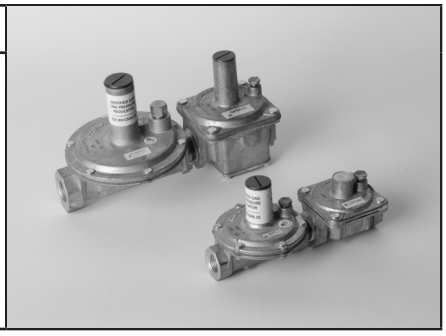

Equipped with approved over protection device

2.2.5 MANIFOLDS

COMPONENT	MATERIAL	AVAILABLE SIZES	
3 Port Manifold	Body: Malleable Iron	- 1/2 NPS x (3) 1/2 NPS Outlets - 3/4 NPS x (3) 1/2 NPS Outlets	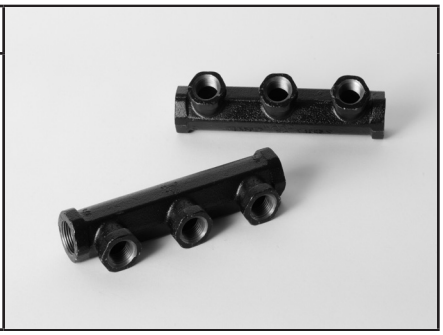

COMPONENT	MATERIAL	AVAILABLE SIZES	
4 Port Manifolds	Body: Malleable Iron	- 1/2 NPS x (4) 1/2 NPS Outlets - 3/4 NPSx (4) 1/2 NPS Outlets - 3/4 NPS x (1) 3/4 NPS & (3) 1/2 NPS Outlets - 1 NPS x (4) 3/4 NPS Outlets -2x 1 1/2 NPS x (4) 1 NPS Outlets	

COMPONENT	MATERIAL	AVAILABLE SIZES	
Cross Manifolds (6 ports)	Body: Malleable Iron	- 1/2 NPS x (6) 1/2 NPS Outlets - 3/4 NPSx (4) 1/2 NPS & (2) 3/4 NPS Outlets - 1 x 3/4 NPS x (4) 1/2 NPS & (2) 3/4 NPS Outlets - 1 1/4 x 1 NPS x (4) 1/2 NPS & (2) 3/4 NPS Outlets	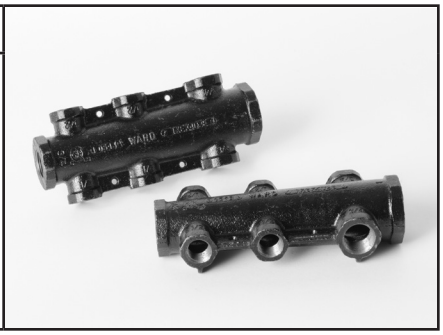

2.2.6 SHUTOFF VALVES

COMPONENT	MATERIAL	AVAILABLE SIZES	
AGA/CSA Approved Gas Valves	Body: Brass	- 1/2 NPS - 3/4 NPS	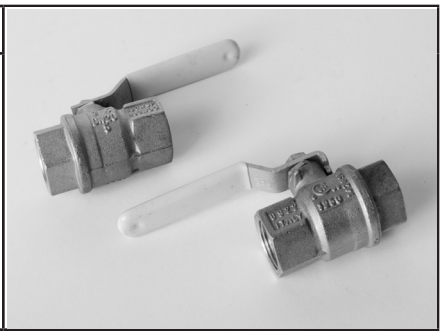

COMPONENT	MATERIAL	AVAILABLE SIZES	
WARDFLEX Valve Assembly	Body: Brass Retainer: Brass Nut: Brass Gasket: Composite Fiber	CSST x NPS - 10M (3/8") x 1/2 - 15M (1/2") x 3/4 - 20M (3/4") x 3/4 - 25M (1") x 3/4	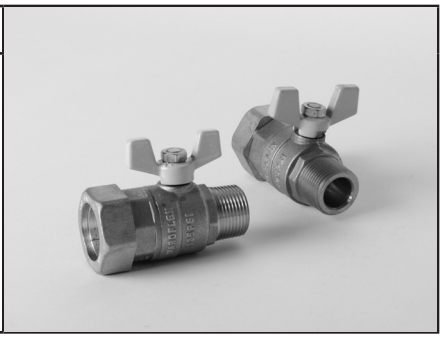

COMPONENT	MATERIAL	AVAILABLE SIZES	
WARDFLEX Right Angle Valve Assembly	Body: Brass Retainer: Brass Nut: Brass Gasket: Composite Fiber	CSST x NPS - 15M (1/2") x 1/2 - 20M (3/4") x 1/2 - 20M (3/4") x 3/4	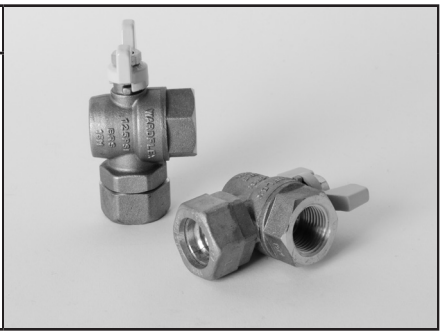

2.2.7 OTHER COMPONENTS

COMPONENT	MATERIAL	AVAILABLE SIZES	
Appliance Stubouts	Pipe: Schedule 40 Steel Plate: Steel	NPS x Pipe Length: - 1/2 NPS - 3/4 NPS	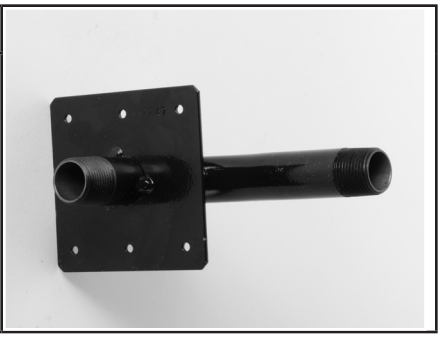

COMPONENT	MATERIAL	AVAILABLE SIZES	
Meter Stubouts	Pipe: Schedule 40 Steel Plate: Steel	NPS x Pipe Length: - 1/2 x 6" - 1/2 x 12" - 3/4 x 6" - 3/4 x 12" - 1 x 6" - 1 x 12" - 1 1/4 x 6" - 1 1/4 x 12"	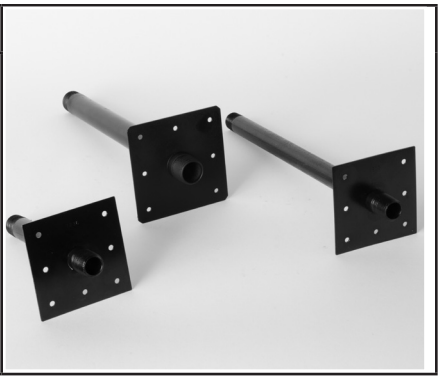

COMPONENT	MATERIAL	AVAILABLE SIZES	
Fireplace Stubout	Pipe: Schedule 40 Steel Plate: Steel	NPS x Pipe Length: - 1/2 x 7"	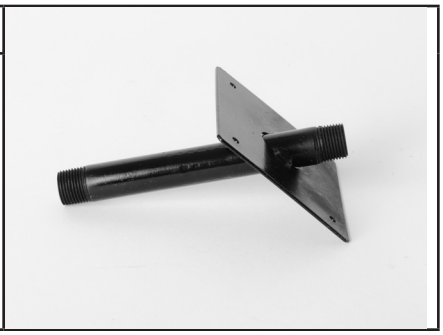

COMPONENT	MATERIAL	AVAILABLE SIZES	
Manifold Bracket	Bracket: 16 Gauge Steel		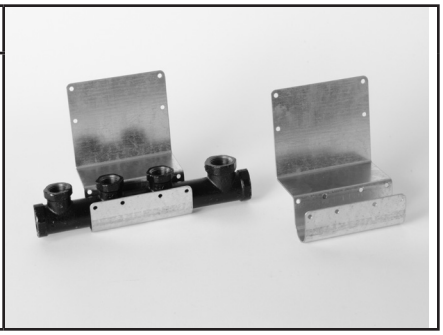

2.2.7 OTHER COMPONENTS

COMPONENT	MATERIAL	AVAILABLE SIZES	
Right Angle Mounting Bracket	Bracket: Steel	Fits CSST Adapter Nuts Sizes: - 3/8" and 1/2"- 3/4"	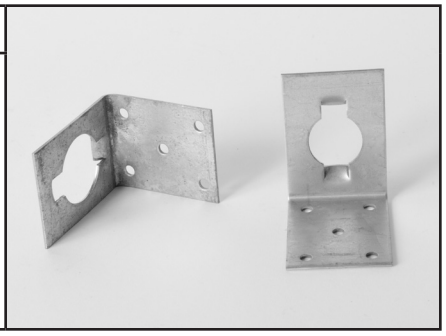

COMPONENT	MATERIAL	AVAILABLE SIZES	
Gas Outlet Box	Box: Plastic Valve: Brass	15M (1/2") 20M (3/4")	

COMPONENT	MATERIAL	AVAILABLE SIZES	
Quick Connects	Box: Plastic Valve: Brass	Surface Mount Kit: - 1/2 NPS Valve Only: - 1/2 NPS	

COMPONENT	MATERIAL	AVAILABLE SIZES	
Bonding Clamp	Clamp: Bronze	1.WFBC: - Fits 3/8 through 1 ridged pipe sizes 2.WFBC: - Fits 1 1/4 through 2 Ridged pipe sizes. UL 467 Approved	

3.1 SYSTEM OVERVIEW

3.1.1 INTRODUCTION

The following section will be used to assist you while you design and size your WARDFlex®/WARDFlex®MAX fuel gas piping system. At any point in which you require further assistance with this process you can visit our webpage (WWW.WARDMFG.COM) or contact Ward Manufacturing's Engineering Department.
WARDFlex® and WARDFlex®MAX are required to be tested, listed, and installed in accordance with the Standard For Fuel Gas Piping Systems Using Corrugated Stainless Steel Tubing, ANSI LC1. It is required by this standard to provide installation instructions which include proper sizing tables and methods of sizing.

3.1.2 SYSTEM DESIGN

In order to properly design a fuel gas piping system you must first recognize all the important criteria.
Requirements for a proper system design include:

- Verify your system meets all local codes. When local codes are in conflict with the manufactures guidelines the local codes must always take precedence.
- Determine the supply pressure coming from the meter by means of a gauge or a rating supplied by the gas company.
- Determine your total system demand for all appliances as well as the largest single load.
- Prepare a floor plan sketch with the load and length combinations for all appliances.
- Determine your allowable pressure drop.

IMPORTANT NOTE:
When choosing a pressure drop to size a WARDFlex®/WARDFlex®MAX system the minimum operating pressure of the appliance must be considered. Choosing a pressure drop that will reduce the supply pressure below the minimum operating pressure of the appliance will cause the appliance to perform poorly or not at all.

Example:
System Supply Pressure: 7 inches W.C.
Appliance minimum operating pressure: 5 inches W.C.

The use of a 3 inch W.C. pressure drop would result in a minimum inlet pressure at the appliance of 4 inches W.C. In this case an alternate pressure drop of 2 inches or less should be selected to meet the minimum operating pressure of the appliance.

3.2 SYSTEM CONFIGURATIONS

3.2.1 INTRODUCTION

There are multiple configurations in which you can install gas piping systems. The following sections will explain these different types of configurations. To the right is a key to accompany the figures used throughout the section:

KEY:

———	BLACK PIPE
- - - - -	WARDFLEX PIPE
(M)	METER
	APPLIANCE SHUT OFF VALVE
	MANIFOLD
	REGULATOR
	TEE
	SERVICE SHUT OFF VALVE

3.2.2 SERIES SYSTEMS

A series system is the most commonly used system for rigid pipe systems utilizing low pressure. A typical series system contains a main run (header) which branches off with tees to the individual appliances. An example of a series system can be seen in figure 3.1.

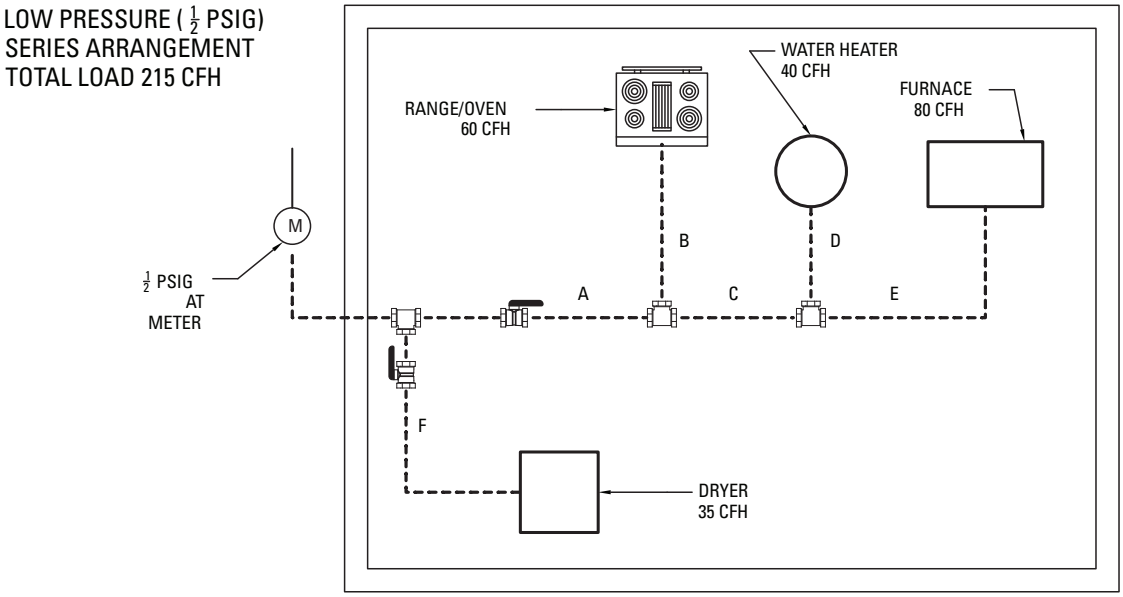

FIGURE 3.1

3.2.3 PARALLEL SYSTEMS

In a parallel system a main run from the meter supplies a central distribution manifold. Individual runs from the manifold supply the appliances. Typically it is best to position the manifold closest to the appliance requiring the greatest load. An example of a parallel system can be seen below in figure 3.2.

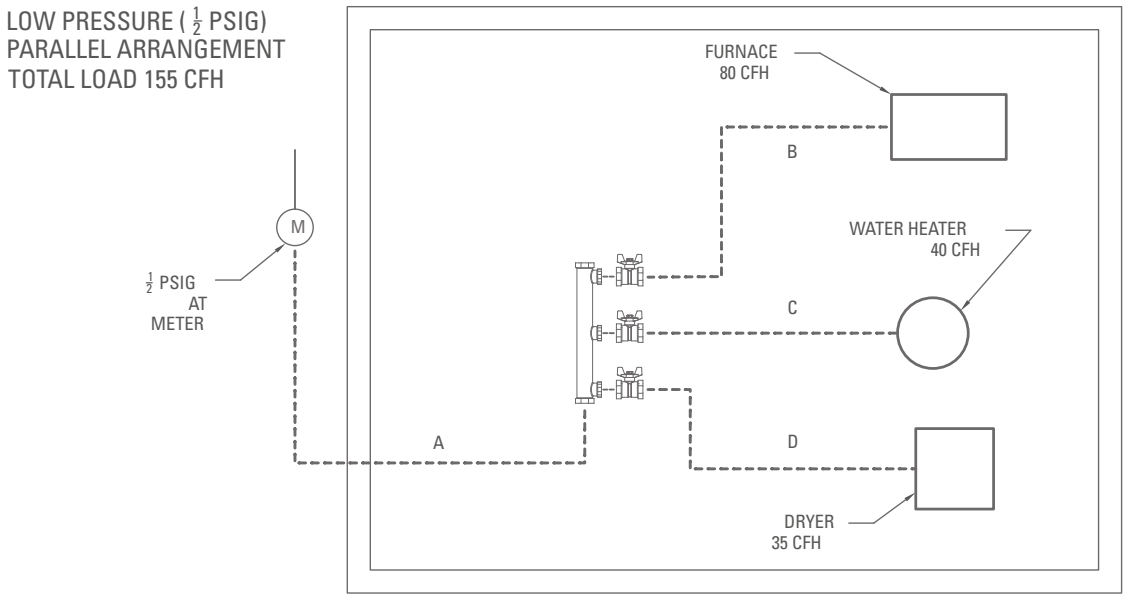

FIGURE 3.2

3.2.4 DUAL PRESSURE SYSTEMS

A dual pressure system utilizes two operating pressures downstream of the meter. The first pressure is set by the service regulator and is usually 2 PSI but can be higher or lower depending on local code. This is the high pressure side of the system. The second operating pressure also known as the low pressure side of the system is set with a pound-to-inches regulator. This pressure can be between 8 to 14 inches W.C. depending on local code, system design, and type of fuel gas. A dual pressure system is shown below in figure 3.3.

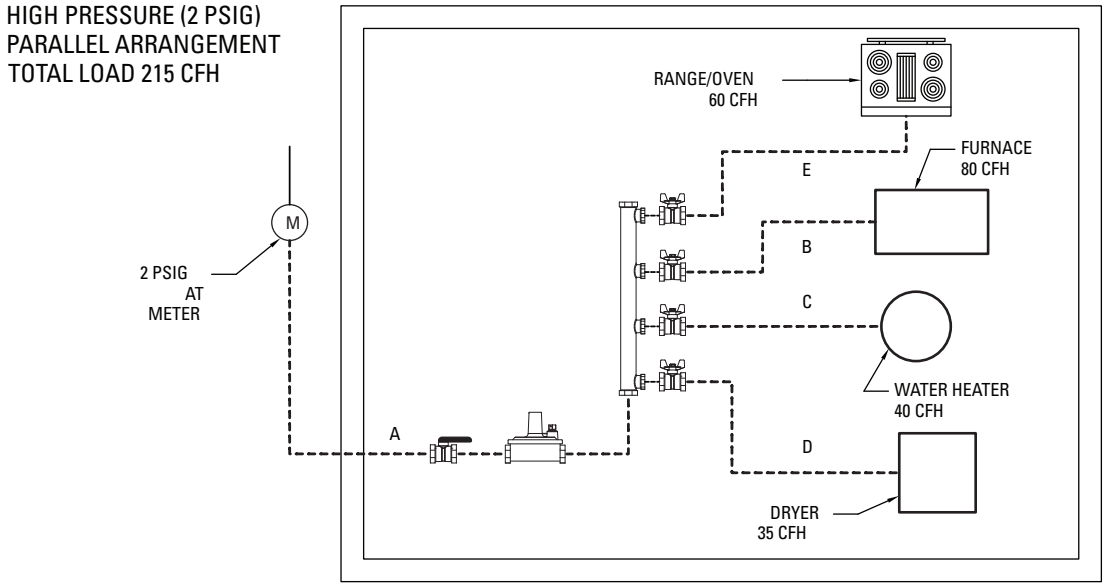

FIGURE 3.3

3.2.5 HYBRID SYSTEMS

Hybrid systems incorporate the use of Corrugated Stainless Steel Tubing with rigid black pipe or copper tubing. In low pressure systems it is often advantageous to use CSST and rigid pipe in the same system. This will help reduce pressure drops in systems which contain long runs and/or high loads. WARDFlex® and WARDFlex®MAX are approved for use with any fuel gas piping system when approved pipe threads are used at the interface. A hybrid system is shown below in Figure 3.4.

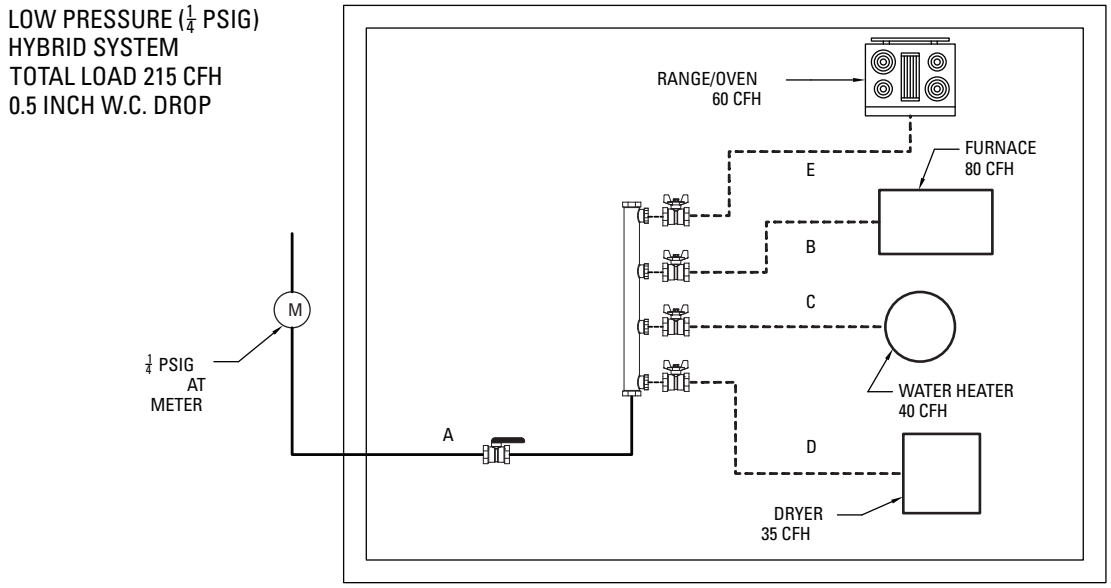

FIGURE 3.4

3.2.6 ELEVATED PRESSURE SYSTEM

In an elevated pressure system a pounds-to-inches regulator is positioned directly in front of each appliance. This is typical in systems where there are long runs and/or high loads because it allows for the use of smaller tubing sizes while being able to supply the minimum inlet requirements of all appliances. An elevated Pressure system can be seen below in Figure 3.5.

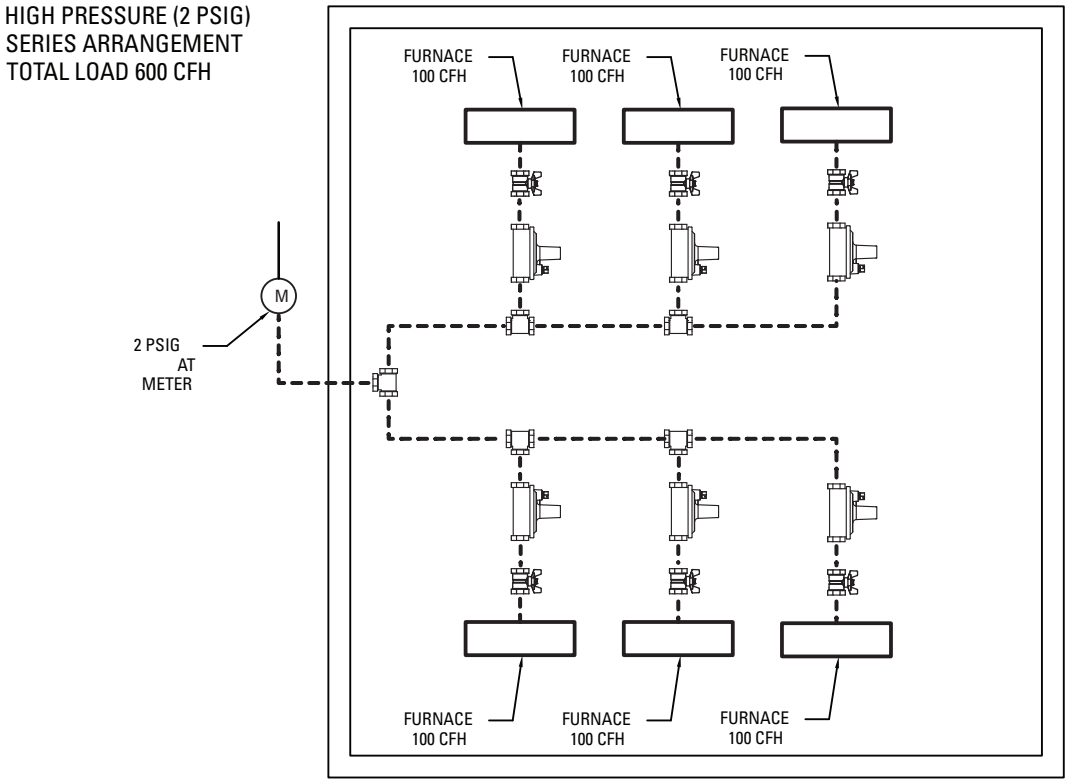

FIGURE 3.5

3.3 SYSTEM SIZING

3.3.1 INTRODUCTION

This section will provide you with sizing methods and examples. The following procedures should be closely followed when sizing the WARDFlex®/WARDFlex®MAX system to ensure it will operate properly. Section 7 of this Design and Installation Guide contains tables that will help you properly select tubing sizes. Care should be taken to ensure you are using the correct tables for your system requirements. For additional assistance with sizing contact Ward Manufacturing's Engineering Department.

3.3.2 LONGEST LENGTH METHOD

When using the longest length method to size a system you must use a table that fits your design criteria. For sizing each run of tubing you need to determine the total gas load for all appliances serviced by that section as well as the longest length that particular section delivers gas. The longest length must include the run from the meter to the furthest appliance. The longest length method can also be used for hybrid and dual pressure systems.
In the case of a dual pressure system you would size the run from the meter to the regulator separately from the rest of the system. The following examples demonstrate the use of the longest length method.

EXAMPLE 1: LOW PRESSURE PARALLEL SYSTEM

The following example demonstrates a typical single family house with 4 appliances with a centrally located manifold. The pressure at the meter is 14 inches W.C. (.5 PSI) and the allowable pressure drop is 6.0 inches W.C. Table A-9 will be used for this example.

LOW PRESSURE LOAD ($\frac{1}{2}$ PSIG)
PARALLEL ARRANGEMENT
TOTAL LOAD 215 CFH

LENGTH OF RUN	LOAD	TUBE SIZE
A=5 feet	215 CFH	15A (1/2")
B=10 feet	80 CFH	10A (3/8")
C=10 feet	40 CFH	15A (1/2")
D=15 feet	35 CFH	10A (3/8")
E=15 feet	60 CFH	10A (3/8")

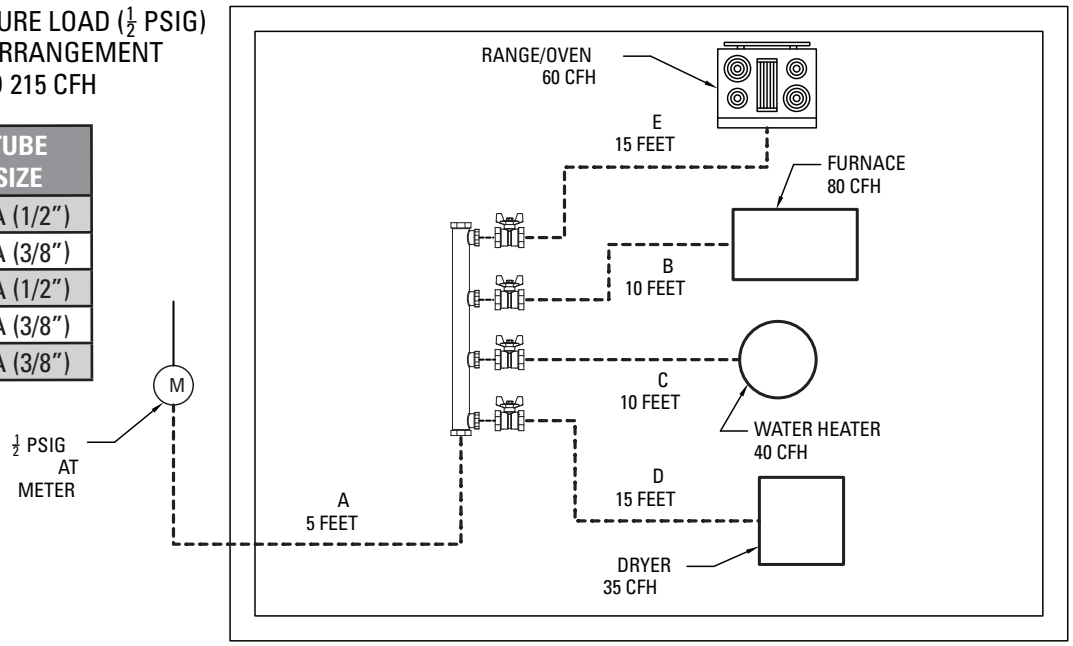

FIGURE 3.6

SIZING PROCEDURE:

1. Size Section "A"
- Determine distance from meter to furthest appliance (range/oven 20 ft.)
- Determine total load supplied by "A" (215 CFH).
- Refer to Table A-9 for a length of 20 ft. and a load of 215 CFH.
- Section "A" will be size 15A tubing.

2. Size Section "B"
- Distance from meter to furnace is 15 ft.
- Load is 80 CFH.
- Table A-9 indicates size 10A tubing.

3. Size Section "C"
- Distance from meter to water heater is 15 ft.
- Load is 40 CFH.
- Table A-9 indicates size 10A tubing is required.

4. Size Section "D"
- Distance from the meter to the dryer is 20 ft.
- Load is 35 CFH.
- Table A-9 indicates size 10A tubing is required.

5. Size Section "E"
- Distance from the meter to range/oven is 20 ft.
- Load is 60 CFH.
- Table A-9 indicates size 10A tubing is required.

EXAMPLE 2: LOW PRESSURE SERIES SYSTEM

This example demonstrates a low pressure series arrangement. The main run (header) uses Tees to branch off to the appliances. The dryer has a separate service line to prevent the use of large tubing sizes. The pressure at the meter is 14 inches W.C. (.5PSI) and the allowable pressure drop is 6 inches W.C. Table A-9 will be used.

LENGTH OF RUN	LOAD	TUBE SIZE
A=10 feet	180 CFH	15A (1/2")
B=15 feet	60 CFH	10A (3/8")
C=10 feet	120 CFH	15A (1/2")
D=5 feet	40 CFH	10A (3/8")
E=10 feet	80 CFH	10A (3/8")
F=10 feet	35 CFH	10A (3/8")

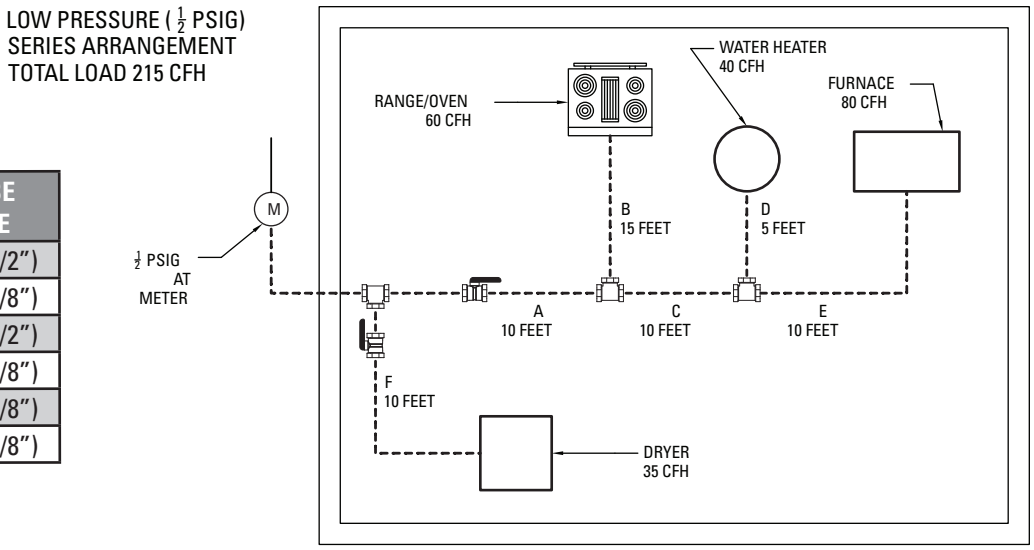

FIGURE 3.7

SIZING PROCEDURE:

1. Size Section "A"
- Distance from meter to furthest appliance (furnace) is 30 ft.
- The load that "A" delivers is 180 CFH.
- Table A-9 at 30 ft. indicates a flow of 192 CFH with size 15A tubing.

2. Size Section "B"
- Distance from meter to range/oven is 25 ft.
- Load is 60 CFH.
- Table A-9 indicates size 10A tubing.

3. Size Section "C"
- The longest run from the meter that includes section "C" is 30 ft. (meter to furnace).
- The total load that "C" delivers is 120 CFH.
- Table A-9 indicates size 15A tubing.

4. Size Section "D"
- Meter to water heater is 25 ft.
- Load is 40 CFH.
- Table A-9 indicates size 10A tubing.

5. Size Section "E"
- The longest run that includes section "E" from the meter to the furnace is 30 ft.
- Load is 80 CFH.
- Table A-9 indicates size 10A tubing is required.

6. Size Section "F"
- The longest run that includes section "F" from the meter to the dryer is 10 ft.
- Load is 35 CFH.
- Table A-9 indicates size 10A tubing is required.

EXAMPLE 3: DUAL PRESSURE PARALLEL SYSTEM

This example shows the proper way to size a dual pressure system. The use of two operating pressures downstream of the meter require two sizing tables be used and each side of the system should be sized separately. Tables A-6 and A-11 will be used.

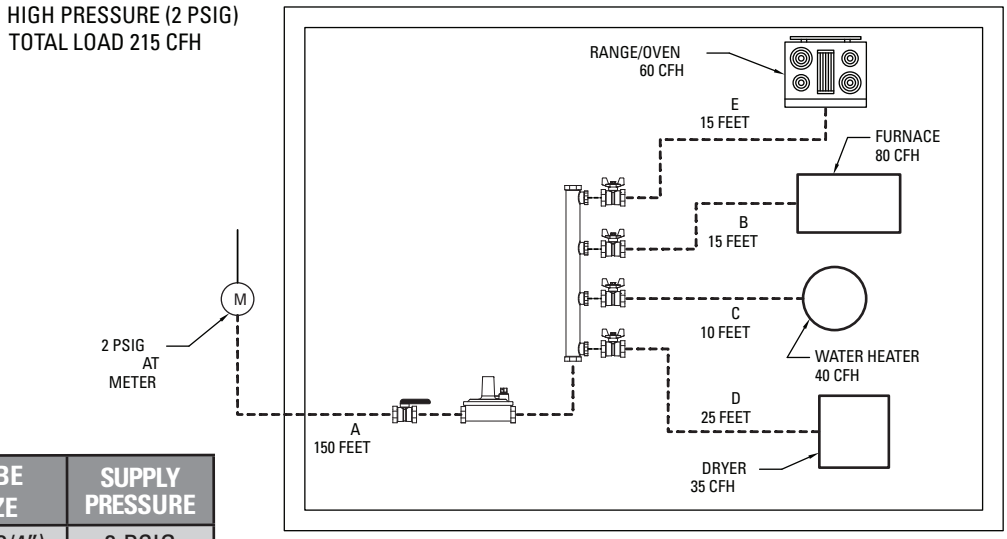

LENGTH OF RUN	LOAD	TUBE SIZE	SUPPLY PRESSURE
A=150 feet	215 CFH	20A (3/4")	2 PSIG
B=15 feet	80 CFH	10A (3/8")	8" WC
C=10 feet	40 CFH	10A (3/8")	8" WC
D=25 feet	35 CFH	10A (3/8")	8" WC
E=15 feet	60 CFH	10A (3/8")	8" WC

SIZING PROCEDURE:

1. Size Section "A"
- Determine distance from meter to regulator (150 ft.).
- Determine the load supply by "A" (215 CFH).
- Refer to Table A-11 to determine the tubing size needed to deliver the maximum system capacity at 2 PSIG use 20A per table A-11.

2. Size Section "B"
- Regulator to furnace is 15 ft.
- Load is 80 CFH.
- Table A-6 indicates size 10A tubing.

3. Size Section "C"
- Regulator to water heater is 10 ft.
- Load is 40 CFH.
- Table A-6 indicates size 10A tubing.

4. Size Section "D"
- Regulator to dryer is 25 ft.
- Load is 35 CFH.
- Table A-6 indicates size 10A tubing.

5. Size Section "E"
- Regulator to range/oven is 15 ft.
- Load is 60 CFH.
- Table A-6 indicates size 10A tubing.

EXAMPLE 4: HYBRID SYSTEM

This example demonstrates a hybrid system which uses black pipe to the manifold and WARDFlex® CSST to the individual appliances. The supply pressure is 7 inches W.C. (.25 PSI) and the allowable pressure drop is .5 inches W.C. Table A-1 will be used for the CSST section and Table A-26 will be used for the black pipe section.

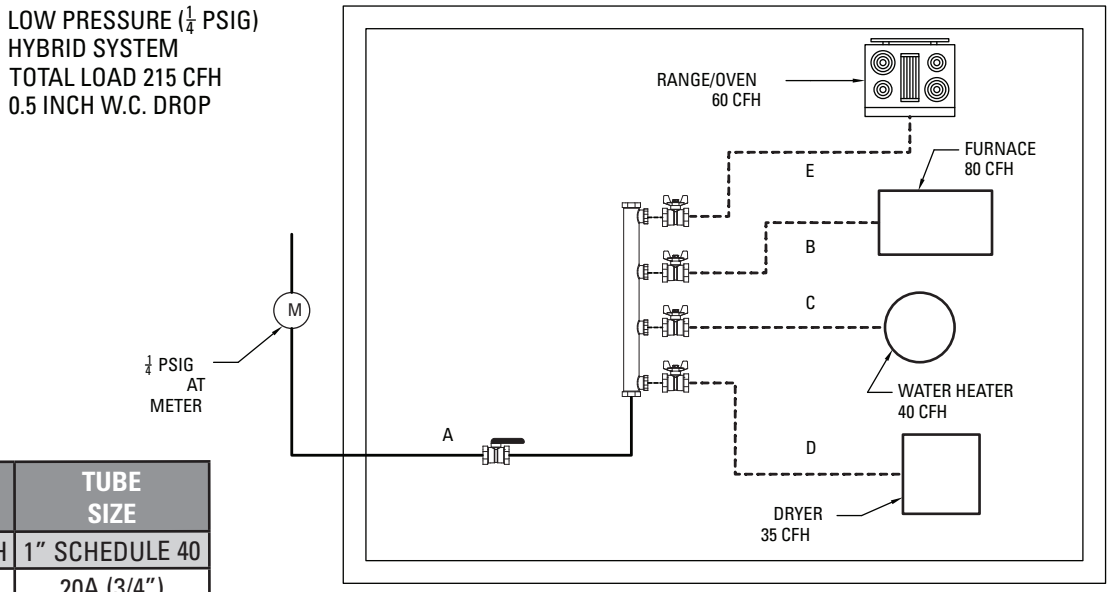

LENGTH OF RUN	LOAD	TUBE SIZE
A=25 feet	215 CFH	1" SCHEDULE 40
B=15 feet	80 CFH	20A (3/4")
C=10 feet	40 CFH	15A (3/4")
D=15 feet	35 CFH	15A (1/2")
E=15 feet	60 CFH	20A (3/4")

SIZING PROCEDURE:

1. Size Section "A"

- Distance from the meter to furthest appliance is 40 feet (dryer).
- Total load supplied by the section is 215 CFH.
- Using Table A-26 locate length of pipe at least 40 feet and a capacity of at least 215 CFH.
- You will find a capacity of 320 CFH which would indicate 1" Schedule 40 pipe.

2. Size Section "B"

- 40 ft. from the meter to the furnace and a load of 80 CFH.
- Refer to Table A-1 and locate a 40 ft. length at the left and follow across to capacity greater than or equal to 80 CFH.
- A capacity of 97 CFH is indicated with size 20A tubing.

3. Size Section "C"

- 35 ft. from the meter to the water heater and a load of 40 CFH.
- Table A-1 indicates size 15A tubing will be required.

4. Size Section "D"

- 40 ft. from the meter to the dryer and a load of 35 CFH.
- For a length of 40 ft., find a value greater than 40 CFH in Table A-1.
- A capacity of 47 CFH is indicated with size 15A tubing.

5. Size Section "E"

- 40 ft. from meter to the range and a load of 60 CFH.
- For a length of 40 ft. find a greater value than 60 CFH in Table A-1.
- The table indicates size 20A tubing.

3.3.3 SUMMATION SIZING METHOD

An alternate solution to the longest length method is the summation sizing method which adds the pressure drops through a particular section of tubing or black pipe. This can be an useful method when the supply pressure and/ or pressure drop is not indicated in one of the sizing charts. This method for sizing is more accurate than the longest length method because you're doing actual calculations for load and length combinations rather than taking from a range of values in a chart. Table A-28 through Table A-32 contain the pressure drop per foot values of WARDFlex®/ WARDFlex®MAX as well as polyethylene and steel pipe.

The procedure for the summation sizing method is as follows:

1. Make a sketch containing the load and lengths for your system.
2. Find the desired flow in the left hand column of Table A-28.
3. Now locate the desired tubing size in the top row of the table.
   The point at which these two intersect is your pressure drop per foot of the selected tubing size.
4. Multiply this value by the length of this portion of the system and you have pressure drop for this section of tubing.
5. Repeat this procedure for any additional legs in the system.
6. Now add up the pressure drops to find the total system pressure drop.
7. If this value is greater than the allowable pressure drop for the system you must increase your tubing or pipe size.

The following example demonstrates the summation sizing method:

EXAMPLE 5: LOW PRESSURE EXAMPLE

This example demonstrates a single household with 3 appliances.
The supply pressure is 5 inches W.C. with a .5 inch W.C. allowable pressure drop.

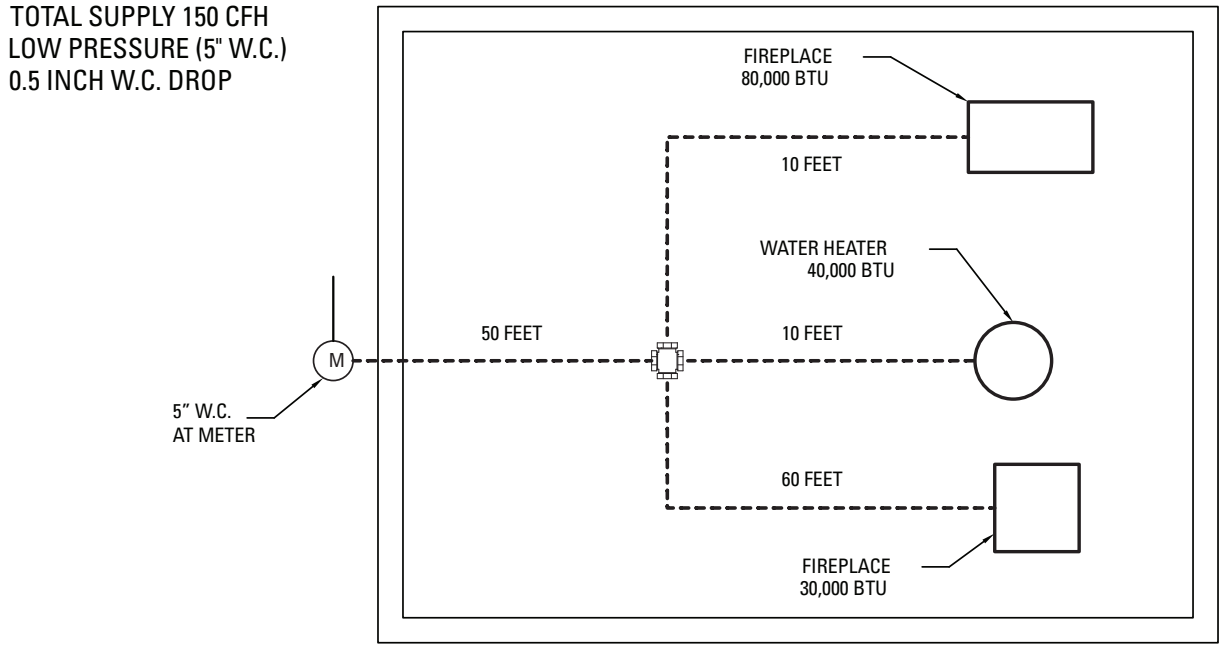

LINE	LENGTH (FEET)	LOAD (CFH)	TUBE SIZE
Main	50	150 CFH	32A (1 1/4")
Furnace	10	80 CFH	15A (1/2")
Water Heater	10	40 CFH	15A (1/2")
Fireplace	60	30 CFH	15A (1/2")

SIZING PROCEDURE:

1. **Size the Main Line**
   - Pressure drop per foot for 32A @150 CFH is .001
   - Multiply that by the length of the section
   - Pressure drop for this section is .050 (50' x .001)
2. **Size the Furnace Line**
   - Pressure drop per foot for 15A @ 80 CFH is .035
   - Multiply that by the length of the section
   - Pressure drop for this section is .350 (10' x .035)
3. **Size the Water Heater Line**
   - Pressure drop per foot for 15A @ 40 CFH is .009
   - Multiply that by the length of the section
   - Pressure drop for this section is .090 (10' x .009)
4. **Size the Fireplace Line**
   - Pressure drop per foot for 15A @30 CFH is .005
   - Multiply that by the length of the section
   - Pressure drop for this section is .300 (60' x .005)
5. **Add the Main line pressure drop to the pressure drop of the individual appliance lines**
   - Pressure drop at Furnace = .400 (.050+.350)
   - Pressure drop at Water Heater = .140 (.050+.090)
   - Pressure drop at Fireplace = .350 (.050+.300)
6. **Check all the pressure drops to be sure they are at or below the allowable pressure drop.**

All pressure drops in this example were below the allowable .5 inch W.C. pressure drop therefore the current tubing sizes will work for this application. If a particular appliance run had a pressure drop larger than .5 inches of W.C. you would need to repeat the process with a larger tubing size. Also, if you would like to maintain smaller tubing sizes you can repeat the calculations for smaller tubing until you exceed the allowable pressure drop.

3.3.4 WARDFLEX SIZING SOFTWARE

Ward Manufacturing the makers of WARDFlex® CSST have provided free sizing software that is available as a free download on the WARDFlex® webpage at www.WARDMFG.com. The software can be downloaded onto a personal computer and used to size WARDFlex® and WARDFlex®MAX fuel gas systems as well as hybrid systems. The sizing utilizes the summation sizing method to help you achieve smaller tubing sizes.
Some features of the software include:

- Ability to size low pressure, dual pressure, and hybrid systems.
- Choose between Natural gas and propane.
- Size add-ons to systems by drawing out the existing arrangement.
- Choose between English or metric units.
- Select 1 of 3 methods for supply parameters.

4.1 GENERAL INSTALLATION PRACTICES

ATTENTION:

WARDFlex® AND WARDFlex®MAX ARE ENGINEERED FUEL GAS PIPING SYSTEMS AND AS SUCH, THE TUBING AND FITTINGS ARE NOT INTERCHANGEABLE WITH OTHER CSST MANUFACTURES PRODUCT. THE USE OF OTHER CSST PRODUCTS WITH BOTH WARDFlex® AND WARDFlex®MAX IS PROHIBITED. CONNECTION BETWEEN TWO DIFFERENT MANUFACTURERS CSST PRODUCTS MAY BE ACCOMPLISHED USING MALLEABLE IRON PIPE FITTINGS WITH ASME B1.20.1 COMPLIANT THREADS.

A. All System hardware should be stored in its original package in a clean dry location prior to installation. Care must be taken to ensure WARDFlex® AND WARDFlex®MAX CSST is not damaged prior to installation.

B. Tubing ends must be temporarily capped, plugged or taped proir to installation to prevent dirt or other foreign debris from entering the tubing.

C. Tubing exposed to extreme low temperatures should be allowed to come up to room temperature prior to installation.

D. Care must be taken to not kink, tangle, twist, stretch or apply excessive force to the tubing or fittings. WARDFlex® AND WARDFlex®MAX are flexible piping system and can be bent during installation around obstructions. Avoid stressing the tubing with tight bends and repetitive bending. Refer to Table 4.1 for recommended bend radius for both WARDFlex® AND WARDFlex®MAX.

TUBING SIZE	ABSOLUTE MINIMUM BEND RADIUS	RECOMMENDED INSTALLED BEND RADIUS INCHES
10A (3/8")	3/4"	3"
15A/15C (1/2")	3/4"	3"
20A/20C (3/4")	1"	3"
25A/25C (1")	1-1/4"	3"
32A/32C (1-1/4")	1-5/8"	4"
38A/38C (1-1/2")	4"	5"
50A/50C (2")	4-1/2"	6"

Table 4.1

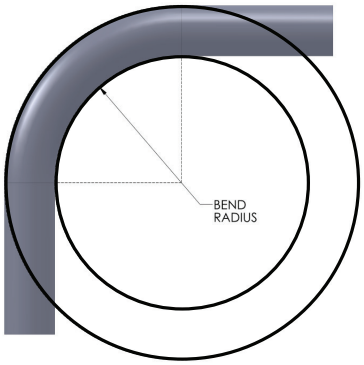

E. When installing in, through or around sharp metal structures (i.e. metal studs, sheet metal, i-beams), rubber grommets or protective tubing should be used to prevent any direct contact which could subject the tubing to damage.

F. Tubing should be supported in a workman like manner with metallic pipe straps, bands, brackets, hangers or building structural components suitable for the size of piping support intervals are not to exceed those shown in Table 4.3. A proper support is one which is designed to be used as a pipe hanger, does not damage the tubing during installation, and provides full support of the tubing once installed. Plastic zip ties and/or cable ties are not to be used as the primary support for the CSST tubing.

ATTENTION:

WHEN SUPPORTING WARDFlex® YELLOW JACKETED CSST AVOID USING CONDUCTIVE METALLIC SYSTEMS SUCH AS, DUCTING, PIPING, VENTING, AND ELECTRICAL CABLES TO SUPPORT THE PIPING.

G. WARDFlex®/WARDFlex®MAX system components shall not be exposed to any acids, bases, salts or other caustic materials. Some chemical compounds have been identified that may aggressively corrode 304 stainless steel. Contact with these chemicals should be absolutely avoided. Any contact should immediately and thoroughly be washed off. The plastic covering is not affected by these compounds and will protect the tubing as long as it is undamaged. Should the plastic covering become damaged, wrapping 2 layers of WARDFlex® self fusing tape around the exposed area will help prevent from exposure to the caustic materials. See the list below of some chemicals to avoid.

CHEMICALS TO AVOID INCLUDE: BUT NOT LIMITED TO:

- Hydrochloric Acid (common name: muriatic or brick wash)
- Zinc Chloride and Ammonium Chloride (soldering flux, pool algaecide)
- Calcium or Sodium Hypochlorite (bleach or pool chemicals)
- Copper Chloride (may be found in fungicides or wood preservatives)
- Ferric Chloride (swimming pool flocculent)
- Phosphoric Acid (scale removers)
- Sodium Chloride (salt water)
- Sulfuric Acid (battery acid)
- Leak detection with chloride-containing compounds found in some common soap (e.g., dishwashing soap) can corrode WARDFlex®. Avoid use of these compounds in connection with WARDFlex®.

ANY LEAK DETECTION SOLUTION COMING IN CONTACT WITH THE WARDFlex® SYSTEM SHOULD HAVE A SULFUR AND HALOGEN CONTENT OF LESS THAN 10 PPM OF EACH (ASTM E515-05 section 7.4).

4.2 FITTING ASSEMBLY

4.2.1 WARDFlex® AND WARDFlex®MAX STEPSAVER FITTING

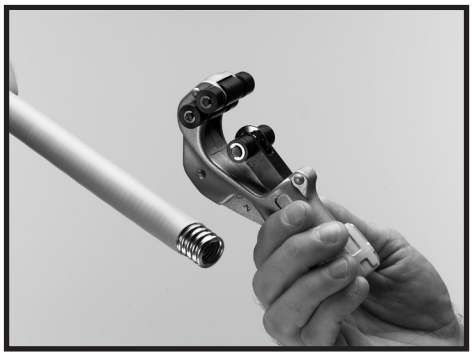

Step 1 - Cut the Tubing
Using a tubing cutter, cut the WARDFlex® or WARDFlex®MAX tubing to the desired length. Then using a utility knife remove the coating to expose a minimum of four corrugations. NOTE: The coating on the WARDFlex®MAX tubing shall be stripped back no more than 5 corrugations. Be sure not to score the tubing while removing the plastic coating.

Step 2 - Install the Nut and Retainer
Slide the nut over the tubing and place the retainer ring. Leave one corrugation exposed from the end of the retainer to the end of tubing. The small end of the retainer must point towards the cut end of the tubing.

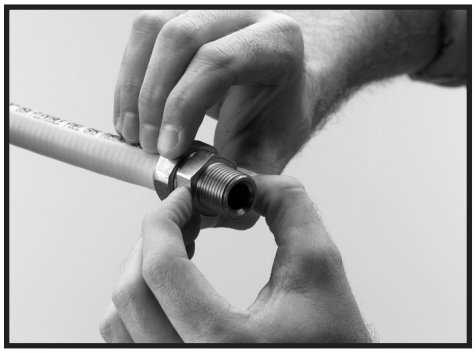

Step 3 - Install the Body
Slide the nut over the retainer and thread it onto the body rotating only the nut.

Step 4 - Wrench Tighten
Using appropriate wrenches tighten the nut until it fully contacts the body. Tightening torque should not exceed the maximum torque listed in Table 4.2 **Do not use any thread sealant on the CSST Connection.** Thread sealant should be used only for NPT threaded connections.

NOTE:

DURING TIGHTENING, ROTATE THE NUT ONLY; THE BODY MUST NOT BE ROTATED WITH RESPECT TO THE TUBING.

TUBING SIZE	WARDFLEX MAXIMUM TIGHTENING TORQUE
10A (3/8")	50 ft-lb
15A (1/2")	50 ft-lb
20A (3/4")	120 ft-lb
25A (1")	160 ft-lb
32A (1-1/4")	200 ft-lb
38A (1-1/2")	200 ft-lb
50A (2")	200 ft-lb

Table 4.2

4.2.2 WARDFlex®/ WARDFlex®MAX FITTING REASSEMBLY

A. The STEPSAVER fitting, with its patented dual seal technology which when installed correctly, will give you a quick reliable seal the first time every time. Should the need arise to disassemble a WARDFlex® STEPSAVER fitting,it may be reused if:
   - The metal to metal and gasket seals show no signs of extensive physical damage.
   - The threads on both the nut and body of fitting assembly show no signs of extensive physical damage.
   - Both halves of the retainer are intact.

B. The WARDFlex®/WARDFlex®MAX 38M (1 1/2”) and 50M (2”) fittings are also allowed for reuse if:
   - The gasket seals show no signs of extensive physical damage.
   - If the gasket is damaged, replacements are available.
   - The threads on both the nut and body of fitting assembly show no signs of extensive physical damage.
   - Both halves of the retainer are intact.

C. As with any installation, a pressure test should always be performed before placing the piping system into service. See section 6.1 for Pressure Testing and Inspection Procedure.

4.3 TUBING ROUTING

4.3.1 VERTICAL RUNS

Vertical runs inside hollow wall cavities are the preferred location for installation of vertical sections. To avoid damage, tubing should be free to move within the wall cavity without immediate supports between floors but must be supported at the point of penetration between floors. Vertical run support spacing is not to exceed 10 feet, requiring hangers only where the height of each floor is greater than 10 feet. The run must conform to Section 4.4 Protection, if it is installed in a location that it will be concealed.

4.3.2 HORIZONTAL RUNS

Areas beneath, alongside, or through floor and ceiling joists or other structural members are typical installation locations for both residential and commercial applications. Structural members may be considered supports for horizontal tubing if they meet the requirements as specified in Table 4.3. The run must conform to Section 4.4 Protection, if it is installed in a location that it will be concealed.

ATTENTION:

CARE SHOULD BE TAKEN WHEN INSTALLING WARDFlex® YELLOW JACKETED CSST, TO MAINTAIN AS MUCH SEPARATION AS REASONABLY POSSIBLE FROM OTHER ELECTRICALLY CONDUCTIVE SYSTEMS IN THE BUILDING.

TUBING SIZE	MINIMUM SUPPORT INTERVAL
10A (3/8˝)	4 feet.
15A/15C (1/2˝)	6 feet.
20A/20C (3/4˝)	8 feet USA 6 Feet Canada
25A/25C (1˝)	8 feet USA 6 Feet Canada
32A/32C (1-1/4˝)	8 feet USA 6 Feet Canada
38A/38C (1-1/2˝)	8 feet USA 6 Feet Canada
50A/50C (2˝)	8 feet USA 6 Feet Canada

Table 4.3

4.3.3 CLEARANCE HOLES AND NOTCHING

Clearance holes for routing WARDFlex®/ WARDFlex®MAX CSST shall have a diameter at least ½" greater than the outside diameter of the tubing. The minimum hole diameters for each tubing size are listed in Table 4.4. Table 4.5 identifies some basic guidelines if drilling and/or notching is required of any structural member. However you should always check local code requirements before proceeding.

A. Holes drilled in vertical members of the wall framing should not exceed 1/4 the width of the member.

B. Holes drilled in plates and other horizontal frame members should not exceed 1/2 the width of the member.

C. Where a hole is to be drilled in a joist, the outside edge of the hole should be located not less than 3 in. away from the floor or ceiling.

D. Notching is not preferred practice, however, when notching, the notched depth must be a minimum of one tubing diameter with the maximum notch being determined by local code.

E. See Table 4.5 for typical maximum hole sizes in structural members.

TUBING SIZE	10A (3/8")	15A/15C (1/2")	20A/20C (3/4")	25A/25C (1")	32A/32C (1-1/4")	38A/38C (1-1/2")	50A/50C (2")
MINIMUM CLEARANCE HOLE DIAMETER	1-1/8"	1-1/4"	1-1/2"	1-3/4"	2-1/4"	2-5/8"	3-1/4"

Table 4.4

	A	B	C	D	E	F
DESCRIPTION	2"x4" Stud Load Bearing Wall	2"x4" Stud Non-Load Bearing Wall	2"x4" Sole Plate	2"x4" Top Plate	2"x6" Floor Joist	2"x8" Floor Joist
MAX. HOLE SIZE	1.375"	2.125"	2"	1.75"	1.75"	2.420"
Maximum WARDFLEX Tubing Size	20A/20C (3/4")	25A/25C (1")	25A/25C (1")	25A/25C (1")	25A/25C (1")	32A/32C (1-1/4")

Table 4.5

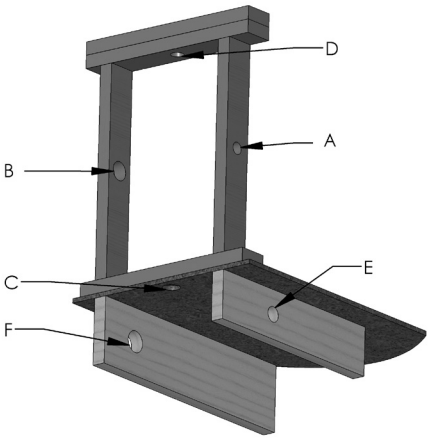

4.3.4 CONCEALED LOCATIONS FOR FITTINGS

WARDFlex®/WARDFlex®MAX mechanical fittings have been tested and listed per the requirements of ANSI LC-1 /CSA 6.26. This specification provides test requirements which certify fittings for concealed locations and connections where accessibility is not possible. When the use of a concealed fitting is required always reference the National Fuel Gas Code NFPA 54 or CSA B149 or other relevant local code. These guidelines address some of the known situations which may require the use of concealed fittings. This guide cannot address all applications of concealed fittings but provides instead typical instructions to demonstrate the principles which apply to fittings listed for installation in concealed locations.

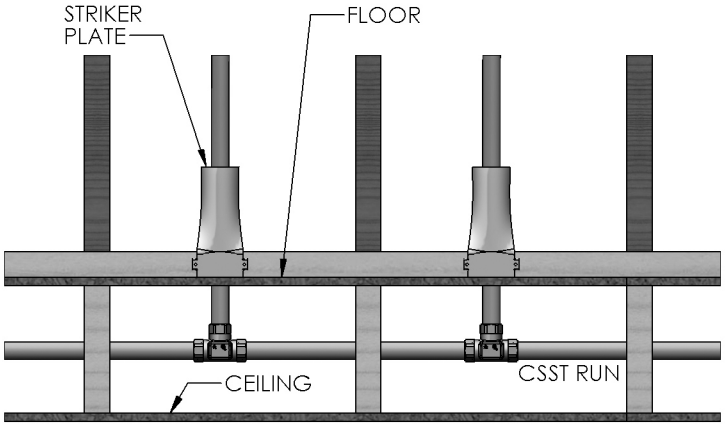

Figure 4.3

Figure 4.3 Multiple gas outlets connected to the same run of WARDFlex®/ WARDFlex®MAX. In this situation a tee-type fitting can be used and installed in a concealed location.

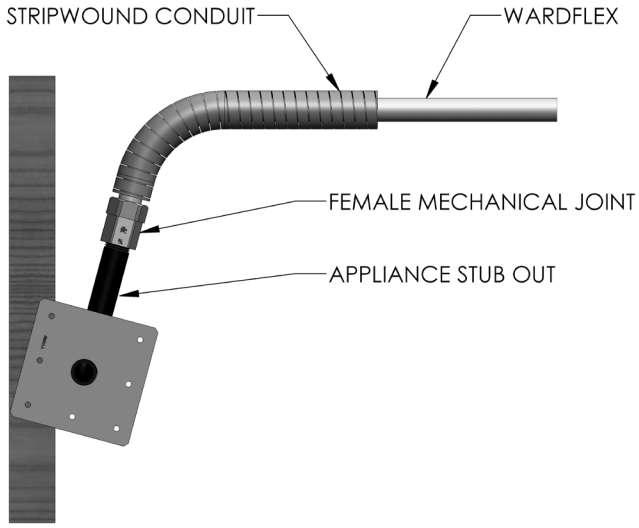

Figure 4.4

Figure 4.4 Appliance stub out with a WARDFlex®/ WARDFlex®MAX female mechanicalfitting which can be installed in a concealed location. For this type of arrangement refer to section 4.4 on for protection details.

Installation in or through chimneys, clothes chutes, gas vents, dumbwaiters, and elevator shafts are all prohibited locations for

A. WARDFlex®/WARDFlex®MAX fittings and tubing.

B. Manifold stations for dual pressure systems, which include the multiport manifold, shutoff valves, and/or pressure regulators, shall not be installed in concealed locations regardless of the qualifications of the tubing fittings.

C. Fittings installed inside accessible enclosure boxes, for such items as quick connect gas outlets or fire place shut off valves, are exempted from these guidelines.

4.3.5 MODIFICATION TO EXISITNG SYSTEM

A. New Ceilings in Unfinished Rooms/Basements - CSST fittings originally installed in accessible ceiling locations can be concealed in the event a ceiling is installed at a later date.

B. Extension to Existing Tubing Run - Concealed CSST can be modified to permit an extension to another appliance location provided there is sufficient capacity to supply both applications at the same time. If an accessible location for the modification is not available, the existing tubing run can be modified with a tee fitting, resulting in a concealed fitting.

C. When any modification to an existing CSST installation leads to concealed tubing, protection devices may be required. Refer to Section 4.4 for details on protection.

4.3.6 OUTDOOR INSTALLATIONS

Per ANSI LC-1/CSA 6.26 WARDFlex®/WARDFlex®MAX CSST products are approved for installation where exposure to outdoor environments can occur. The following guidelines shall be followed when installing WARDFlex®/WARDFlex®MAX outdoors to protect tubing and fittings from the effects of weather.

A. The covering shall remain intact as much as practical for the given installation.
Any portion of exposed stainless steel shall be wrapped with tape (e.g. PVC, Self Fusing Silicone) or sleeved (e.g. PVC, Polyolefin) to prevent corrosive attack by acid wash or other caustic compounds that may be present. If contact with caustic compounds should occur ensure that all traces are immediately removed to prevent premature corrosion failure.

B. WARDFlex®/WARDFlex®MAX mechanical joint fittings shall be protected from the effects of weather when used outdoors. After the connection is made to outdoor equipment the fitting assembly shall be wrapped with tape (e.g. PVC, Self Fusing Silicone) or by applying shrink sleeves (e.g. PVC, Polyolefin) around the entire assembly.

C. When installed outdoors between grade and six feet above WARDFlex®/WARDFlex®MAX must be protected inside non-metallic conduit or installed in a location where it will not be subjected to mechanical damage.

D. When installed in crawl spaces or underneath mobile homes, WARDFlex®/WARDFlex®MAX shall be installed in accordance with these installation instructions.

4.3.7 FIRE RATED CONSTRUCTION

A. WARDFlex®/WARDFlex®MAX have been reviewed for installation through UL Classified fire rated construction and is listed for use in a number of UL Through Penetration Firestop System Listings.
See table 4.6 for a complete listing. System numbers are subject to change and deletion be sure to verify systems in the latest revision of UL Fire Resistance. In the event there is a conflict between this guide and UL, UL takes precedence.

TYPICAL INSTALLATIONS

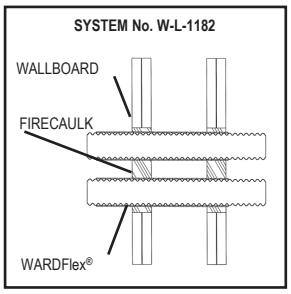

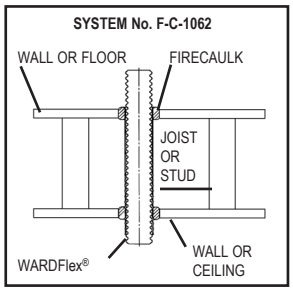

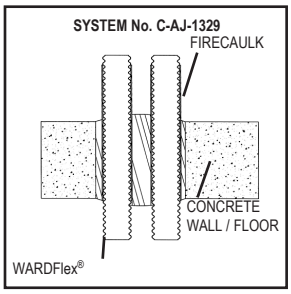

R18357 WARDFlex® UL Through Penetrating Firestop Listings

System No.	Rating hr		Firecaulk Product	Remove Covering	Max Size	Max Quantity
	F	T				
C-AJ-1217	3 & 4	0	5		2	1
C-AJ-1225	2	0	1	R	2	1
C-AJ-1240	2 & 3	0	6		3	1
C-AJ-1327	3	2 & 3	2		1-1/4	1
C-AJ-1328	3	2 & 3	3		1-1/4	1
C-AJ-1329	3	2	2		1-1/4	3
C-AJ-1330	3	2	3		1-1/4	3
C-AJ-1346	2	0	9		1	1
C-AJ-1353	3	0	4		2	1
C-AJ-1354	2	0	4		2	>1
C-AJ-1427	2	0	7		1	1
C-AJ-1428	2	0	7		1	1
C-AJ-1429	2	0	7		1	>1
C-AJ-1513	2	0	9		2	1 OR MORE
C-AJ-1551	2	0	1, 7, 10,		1	1
C-AJ-1553	1 & 2	0	12		1	3
C-AJ-1556	2	0	1, 10, 13,16		1	1 OR MORE
C-AJ-1584	3	1	19		1 1/4	1 OR MORE
C-AJ-1600	3 & 4	0	15		2	1
F-C-1029	1 & 2	1	1	R	2	1
F-C-1061	1/4 & 1	1/4 & 1	2		1-1/2	1
F-C-1062	1/4 & 1	1/4 & 1	3		1-1/2	1
F-C-1074	1 & 2	1/4, 1/2 & 1	4		2	1
F-C-1075	1 & 2	1/4, 1/2 & 1	4		1	>1
F-C-1094	1	1/4	7		1	1
F-C-1095	1	3/4	7		1	1
F-E-1002	1	1	4		2	1
F-E-1003	1	1	4		1	>1
F-E-1009	1	1/4	7		1	1
F-E-1010	1	3/4	7		1	1
W-J-1079	2	2	2		1-1/4	1
W-J-1080	2	2	3		1-1/4	1
W-J-1081	2	2	2		1-1/4	3
W-J-1082	2	2	3		1-1/4	3
W-J-1098	2	1	4		1-1/4	1
W-J-1099	2	1	4		2	1
W-J-1101	2	1	4		2	>1
W-J-1122	2	1/4	7		1	>1
W-J-1127	2	1/4	7		1	1
W-J-1206	1 & 2	3/4 & 1 1/2	19	1 1/4	1 OR MORE	
W-L-1001	VARIES	VARIES	1		1	1
W-L-1096	2	0	1	R	2	1
W-L-1179	1 & 2	1 & 2	2		1-1/4	1
W-L-1180	1 & 2	1 & 2	3		1-1/4	1
W-L-1181	1 & 2	1 & 2	2		1-1/4	3
W-L-1182	1 & 2	1 & 2	3		1-1/4	3
W-L-1199	1 & 2	1 & 2	2		1-1/4	1
W-L-1200	1 & 2	1 & 2	3		1-1/4	1
W-L-1222	1	1/4, 3/4 &1	4		1-1/4	1
W-L-1223	1	1	4		2	1
W-L-1224	1	2	4		2	>1
W-L-1243	1 & 2	0	9		1	1
W-L-1287	1 & 2	0 & 1/4	7		1	>1
W-L-1296	1 & 2	0 & 1/4	7		1	1
W-L-1407	2 & 2	0	12		1	3
W-L-1427	1 & 2	3/4 & 1 1/2	19		1 1/4	1 OR MORE
W-L-1429	1 & 2	3/4 & 1 1/2	8		1 1/4	1
W-L-8071	1 & 2	0	9		2	1 OR MORE

System No. explanations: First alpha: F=floor is being penetrated, W=wall, C=walls or floors, E=Floor-ceiling assemblies consisting of concrete with membrane protection Second alpha: A=concrete floors with a minimum thickness less than or equal to 5 inches, C= framed floors,J=concrete or masonry walls with a minimum thickness less than or equal to 5 inches, L= framed walls. Rating hours: F= flame passage criteria, T= temperature rise of 325°F. Firecaulk Products: 1 3M COMPANY: CP-25-WB+, 2 Rectorseal: Metacaulk 1000, 3 Rectorseal: Biostop 500+ caulk, 4 Specified Technology: SpecSeal LCI sealant, 5 Specified Technology: SpecSeal 100, 101, 102, 105, 120 or 129, 6 Specified Technology: SpecSeal 100, 101, 105, 120 or 129 Sealant, SpecSeal LC 150, 151, 152or 155 Sealant may be used for 2 hr F Rating only. 7 3M COMPANY: IC 15WB, 8 EGS NELSON FIRESTOP: LBS+, 9 HILTI INC: FS-ONE Sealant 11 Rectorseal: Biostop 350i 12 NUCO INC: Self Seal GG-266 13 3M COMPANY: FB-1000 NS 14 3M COMPANY: FB-1003SL IC 15WB+ 15 Hercules Chemical: Hercules Plumbers Firestop Sealant 16 Rectorseal: Metacaulk 350i 17 HILTI INC: CP 606 18 NUCO CO Self Seal GG-200 19 Rectorseal FlameSafe FS900+ or FS1900 Consult UL Fire Resistance Directory-Volume 2 for specific construction details or contact WARD MANUFACTURING These can be downloaded directly from UL's web site:http://database.ul.com/cgibin/XYV/cgifind.new/LISEXT/1FRAME/srchres.html

4.4 PROTECTION

4.4.1 INTRODUCTION

WARDFlex®/WARDFlex®MAX tubing shall be protected from physical damage caused by screws, nails, drill bits, etc. The tubing is most susceptible to puncture at all points of support. The best practice is to install the tubing in those areas where the likelihood of physical damage is minimized and no protection is needed; for example:

A. Where tubing is supported at least 3 inches from any outside edge of a stud, joist, etc. or wall surface.

B. Where any unsupported tubing can be displaced in the direction of potential penetration at least 3 inches.

C. Where tubing is supported under the joist in basements or crawl spaces and is not concealed by wall board or ceilings.

When WARDFlex®/WARDFlex®MAX is installed in locations where the potential of physical damage exists, the use of hardened steel striker plates, listed for use with CSST, must be used. Striker plates other than those provided for use with WARDFlex®/WARDFlex®MAX are prohibited. The tubing may also be routed inside strip wound conduit or schedule 40 pipe when protection is required.

In areas where penetration through studs, joists, plates and other similar structural members occur striker protection is required when all of the following criteria apply:

1. When the piping system is installed in a concealed location and is not viewable.
2. When the piping system is installed in a location that does not allow free movement to avoid puncture threats.
3. When the piping system is installed within 3 inches of possible points of penetration.

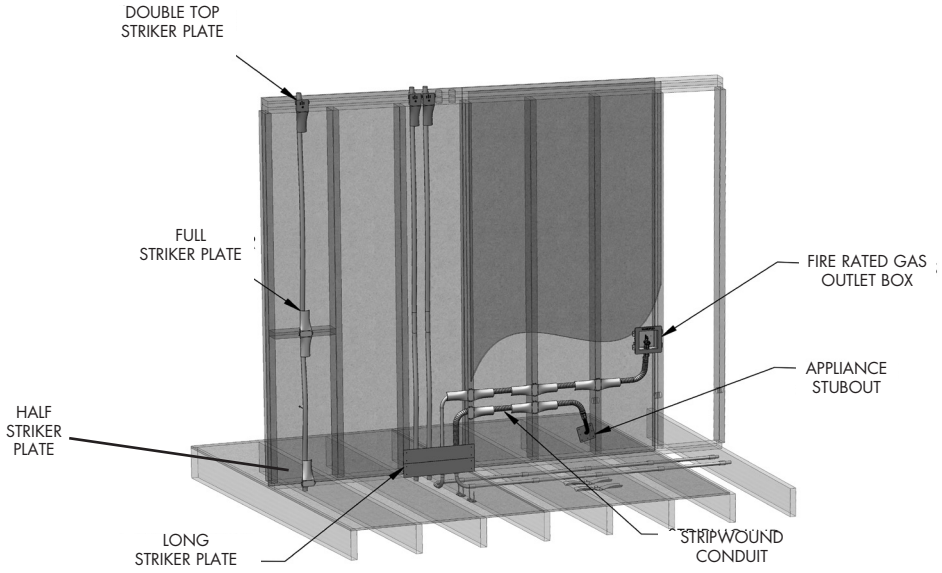

Figure 4.5

4.4.2 STRIKER PLATES

Striker plates are used to prevent tubing damage in areas where potential penetration threats exist through studs, joists, plates, and other similar structural members. Only striker plates supplied by Ward Manufacturing are permitted for use with WARDFlex®/WARDFlex®MAX. For installations where all three above criteria apply the following striker plate protection must be applied.

A. At concealed support points and points of penetration less than 2 inches from any edge of a stud, joist, plate, etc. shielding is required at the area of support and extending 5 inches in one or both directions (if appropriate).

B. At concealed support points and points of penetration within 2 to 3 inches from any stud, joist, plate, etc., listed quarter striker plates are required at the area of support. Figure 4.7 and Figure 4.8 show proper means of protection for this type of installation.

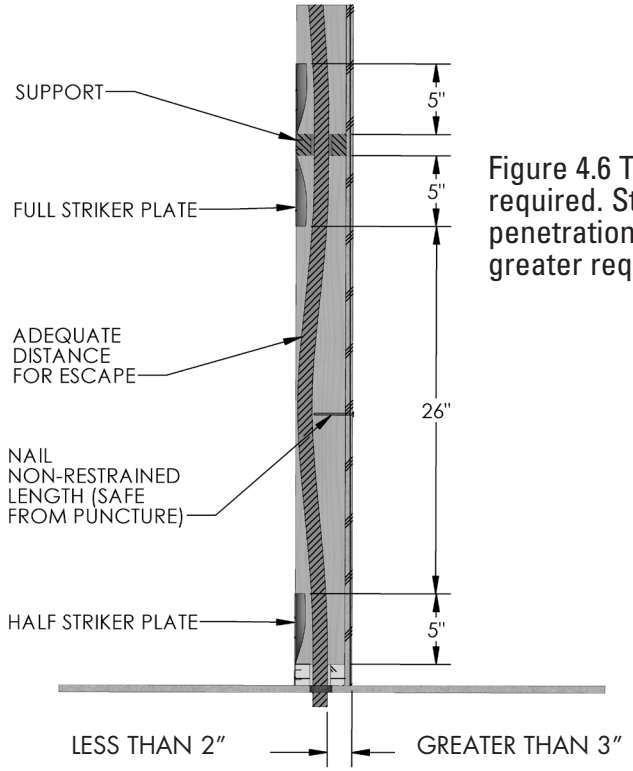

Figure 4.6 Typical locations where striker plates are required. Striker plates are installed at both horizontal penetrations unrestrained vertical runs of 26 inches or greater require no additional protection.

Figure 4.6

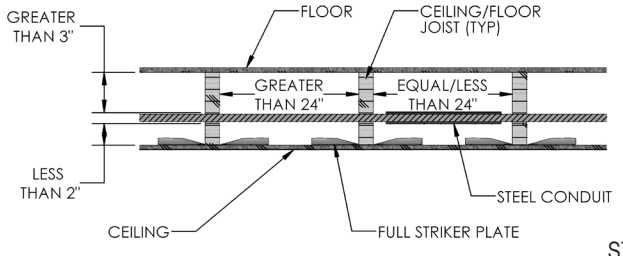

Figure 4.7

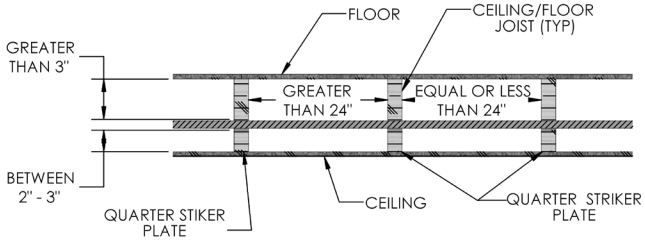

STRIPWOUND METAL CONDUIT

Figure 4.8

C. Tubing routed horizontally through structural members shall be protected from puncture threats with the appropriate shielding material. At penetration joints, listed striker plates of the appropriate size shall be utilized. Tubing between constraints that are less than 24 inches apart and meeting the criteria requiring full striker plates, shall be additionally protected by stripwound metal-conduit, or schedule 40 pipe.

D. CSST greater than 1" nominal diameter installed within a concealed hollow wall cavity of 2" x 4" construction shall be protected along the entire concealed run length with stripwound metal conduit, or schedule 40 pipe.

E. Should an unfinished ceiling (I.e. basement) be covered at a later date, the quarter striker plates, shown in figure 4.9 and 4.10, should be replaced with appropriate protection devices that provide adequate protection for potential penetration threats.

F. Although figures 4.9 and 4.10 are acceptable, installation method 4.11 is preferred.

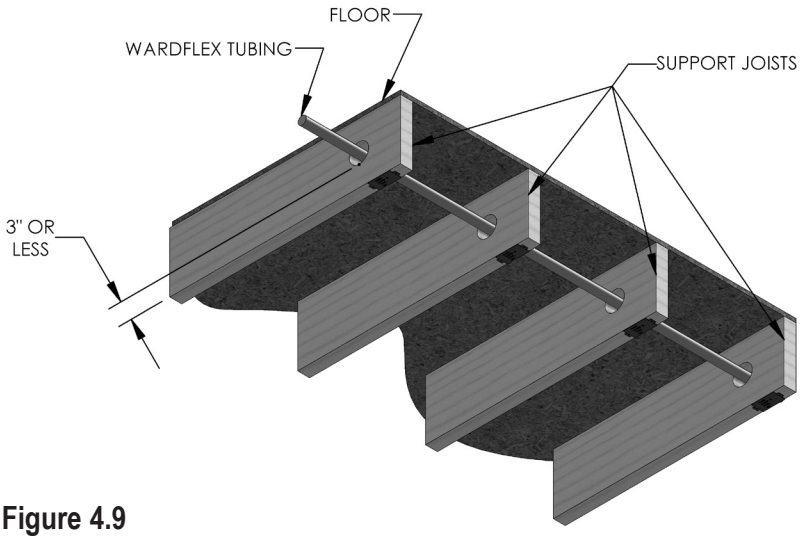

Figure 4.9

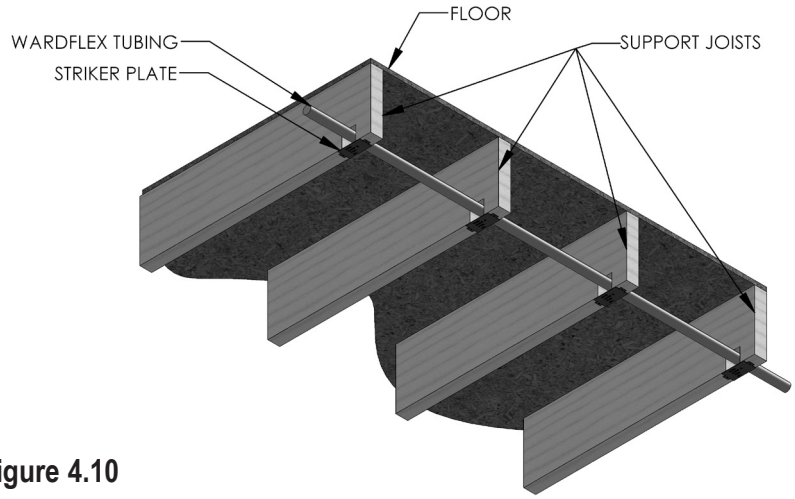

Figure 4.10

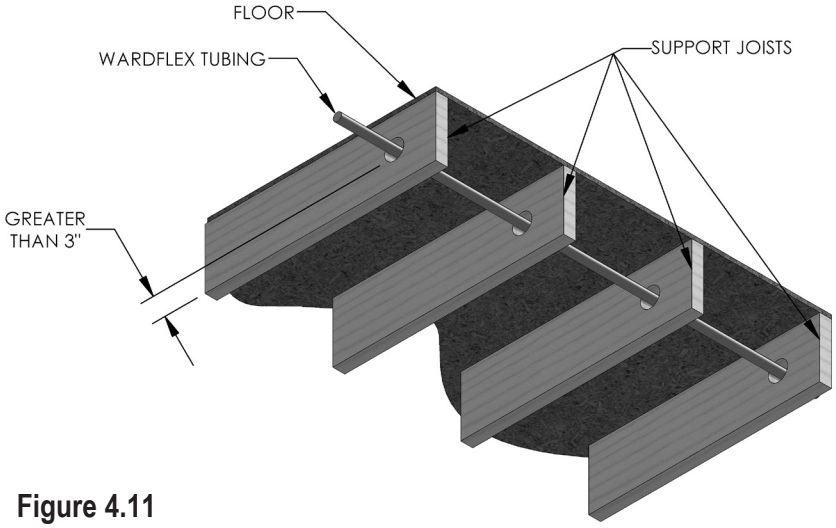

Figure 4.11

4.4.3 STRIPWOUND METAL CONDUIT

A. At termination points not covered by ANSI specifications, standard stripwound metal conduit shall be installed as additional protection. Stripwound conduit shall not be used as a substitute for striker plates where tubing passes through structural members.

B. Stripwound conduit shall also be used to shield tubing from puncture threats when WARDFlex®/WARDFlex®MAX is installed in a concealed location where it cannot be displaced a minimum 3"from a potential puncture threat or the distance between supports is less than 24 inches. See Figure 4.12.

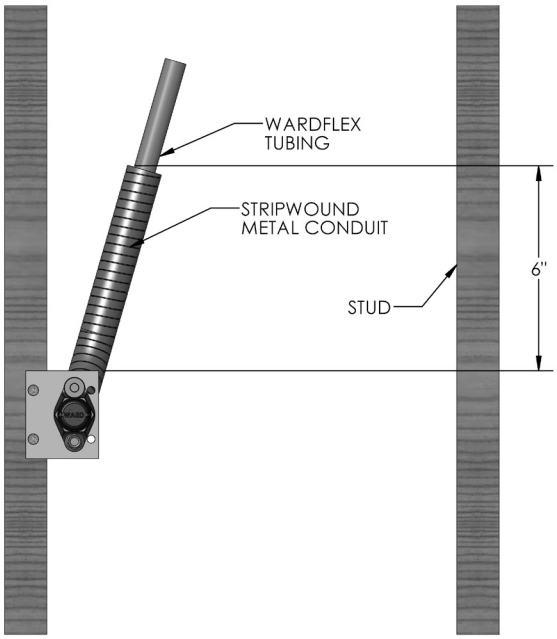

Figure 4.12

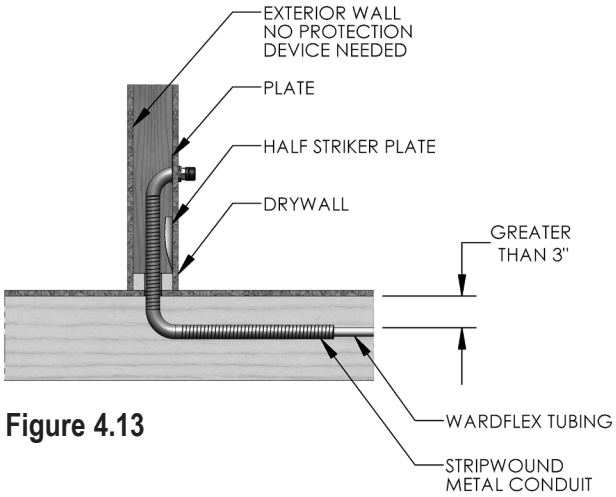

Figure 4.13

Figure 4.13 Termination fitting for an appliance connection with stripwound conduit providing extra protection inside the wall and floor cavities.

4.4.4 INSTALLATION IN INSULATED WALLS

Rigid installations present significant puncture threats for WARDFlex®/ WARDFlex®MAX installations in concealed spaces. In concealed spaces, e.g. wall cavities, rigid insulation will prevent CSST from being displaced. WARDFlex®/WARDFlex®MAX shall not be installed in a wall cavity with foam insulation without additional protection as described below.

A. Tubing shall be routed through an approved conduit in walls where "foamed in" insulation is to be used i.e. rigid steel pipe or conduit. Approved conduit shall be secured according to local building practice.
B. Protection methods such as pipe, conduit and strip wound hose, supply protection and give the tubing space in which to move. On exterior walls the tubing may be fastened to the sheathing with cable clamps or secured with sticks/wires sprung between studs to center tubing between interior and exterior surfaces.
C. When tubing is installed inside walls with batt insulation the tubing shall be routed between the face (craft paper/vapor barrier) and the wall surface. If installed in a concealed location where it cannot be displaced a minimum 3"from a potential puncture threat the run shall be protected with stripwound conduit.
D. CSST tubing does not need additional protection where it is more than three inches from any puncture threats although consideration must be given to the chance that it may migrate toward penetration threats as the insulation is applied and during curing.

4.5 METER-CONNECTIONS

4.5.1 UNSUPPORTED METERS

A. Meters which depend on the service and house piping for support shall not be directly connected to the flexible gas piping.

B. The use of an outdoor termination fitting mounted to the exterior of the structure, meter stubout or other rigidly mounted termination fitting are acceptable transitional methods.

METER CONNECTION -PIPE SUPPORTED METER

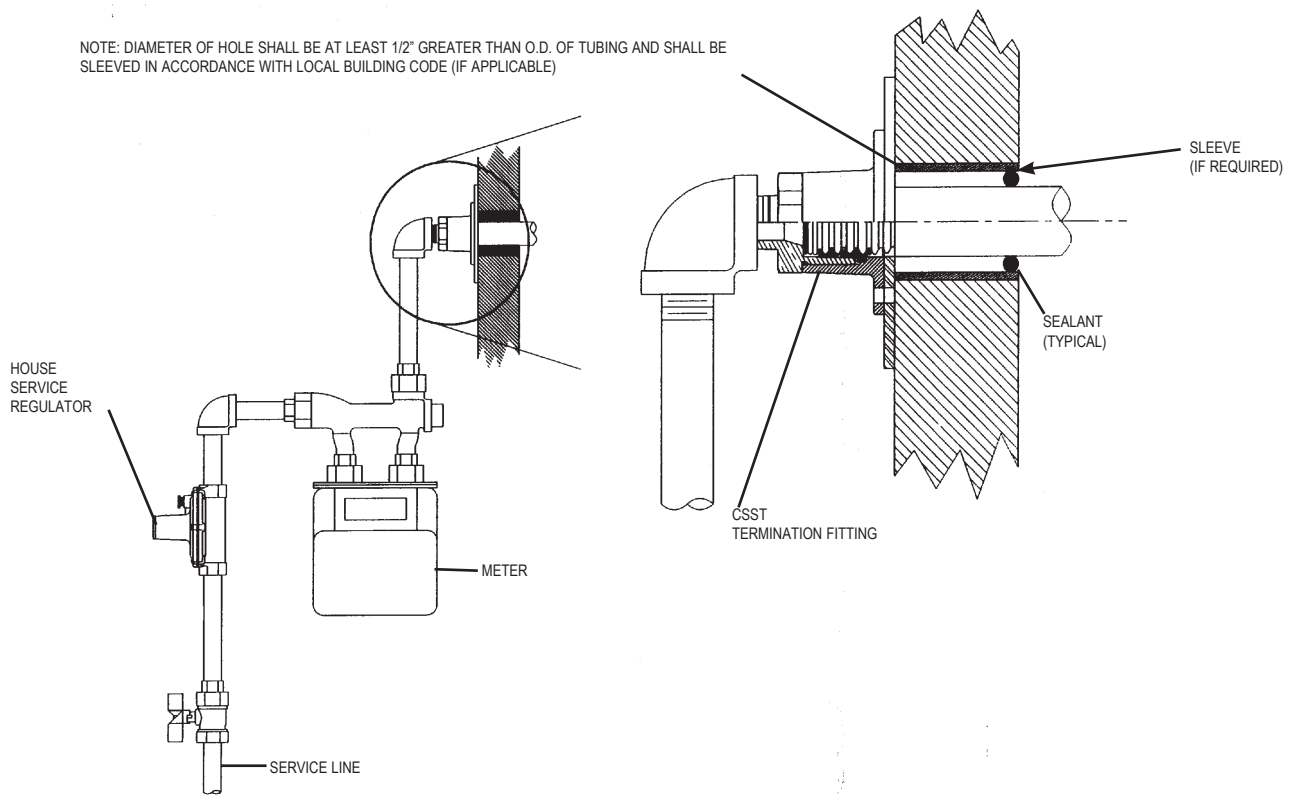

Figure 4.15

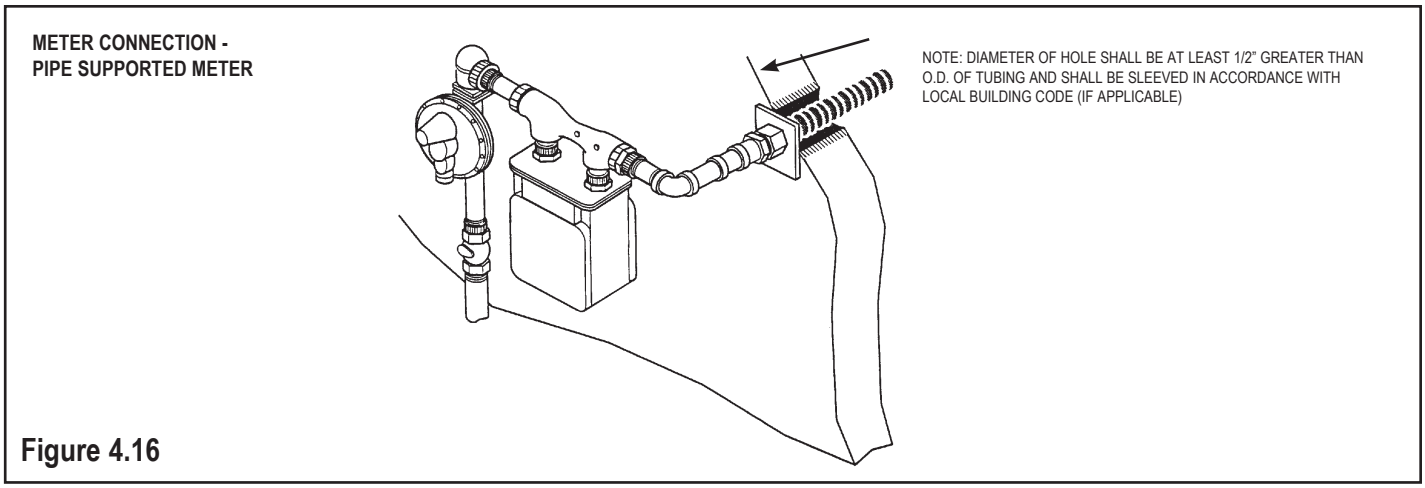

Figure 4.16

4.5.2 SELF SUPPORTED METER

A. Meters which are independently supported by a bracket may be directly connected to WARDFlex®/ WARDFlex®MAX.
B. If practical a 3 to 6 in. loop of tubing should be included to compensate for meter movement and differential setting.

NOTE: WARD MANUFACTURING DOES NOT REQUIRE MECHANICAL PROTECTION FOR OUTDOOR METER CONNECTION MORE THAN 6 FT. ABOVE GRADE HOWEVER, LOCAL CODES MUST BE CONSIDERED. CHECK WITH YOUR LOCAL CODE AUTHORITY.

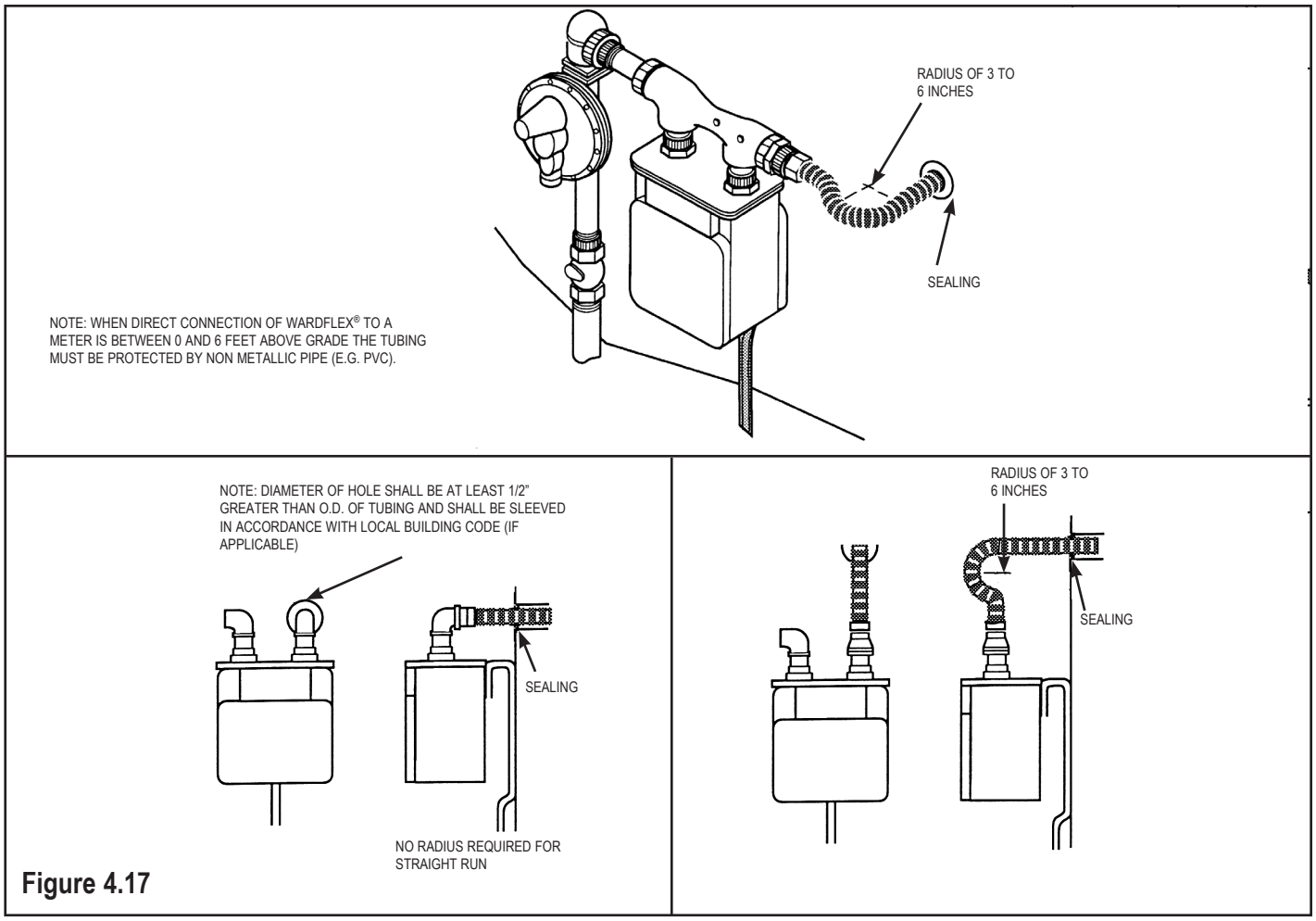

Figure 4.17

4.6 APPLIANCE CONNECTIONS

4.6.1 MOVEABLE APPLIANCES

IMPORTANT
WARDFlex®/WARDFlex®MAX ARE NOT RATED AS FLEXIBLE APPLIANCE CONNECTORS AND MUST NOT BE DIRECTLY CONNECTED TO MOVABLE APPLIANCES.

A. When using WARDFlex® or WARDFlex®MAX with moveable appliances such as a ranges or dryers, the tubing must be rigidly terminated before the appliance. Appliance stub outs, termination fittings or transitioning to rigid black pipe are acceptable means to terminate CSST prior to the appliance.

B. Final connection from CSST termination point to a movable appliance shall be made with a flexible appliance connector or another approved connection device.

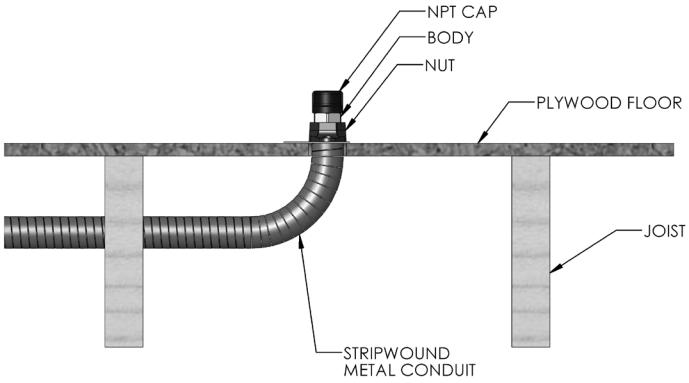

Figure 4.18

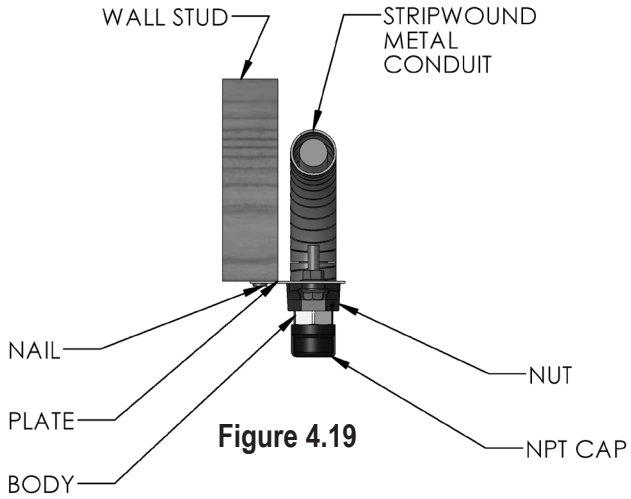

Figure 4.19

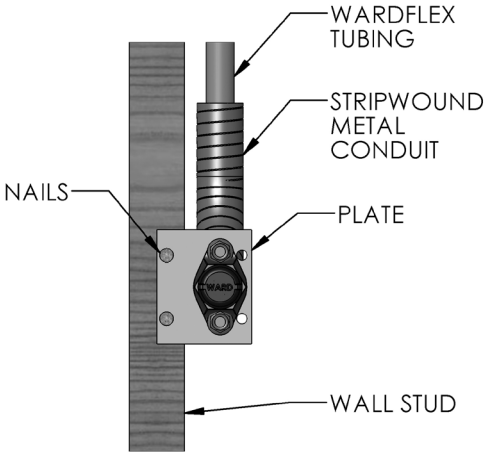

Figure 4.20

4.6.2 NON-MOVEABLE APPLIANCE

A. WARDFlex®/WARDFlex®MAX can be directly connected to a non-moveable appliance such as a furnace or water heater (Figure 4.21) (be sure to check with local code if this is acceptable prior to installation).

B. In this type of application, no termination fitting is required and the CSST should be terminated at the appliance shut off valve.

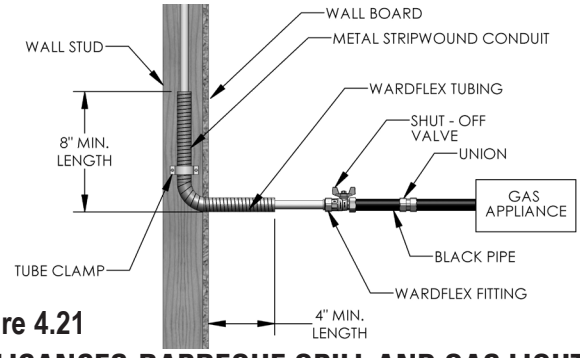

Figure 4.21

ATTENTION:
WARDFlex®/WARDFlex®MAX CSST shall not be directly routed into a metallic gas appliance enclosure utilizing a metallic vent that penetrates a roofline. The WARDFlex®/ WARDFlex®MAX connection shall be made outside of the metallic gas appliance enclosure to a section of rigid metallic pipe, stub-out, or termination fitting.

4.6.3 OUTDOOR APPLICANCES-BARBEQUE GRILL AND GAS LIGHT CONNECTION

A. Movable grills shall be connected using an approved outdoor appliance connector which shall be attached to the CSST system at either a termination fitting, quick disconnect or other rigidly mounted transition fitting (Figure 4.22). An approved outdoor appliance connector shall be used to connect the appliance to the gas piping system.

B. Permanently mounted grills located on decks shall be connected to the CSST system as shown in figure 4.23 and in accordance with the manufacturer's instructions. The outdoor portion of the CSST system shall be supported against the side of any inside deck joist.

C. Permanently mounted outdoor lights located on decks shall be connected to the CSST system in the manner as permanently mounted grills as shown in figure 4.23 and in accordance with manufacturer's instructions.

D. Yard mounted lights shall be connected to the CSST system as shown in figure 4.24.
All WARDFlex®/WARDFlex®MAX installed below grade shall be routed through nonmetallic watertight conduit and fittings protected in accordance with the requirements of section 4.3.6 Outdoor Installation.

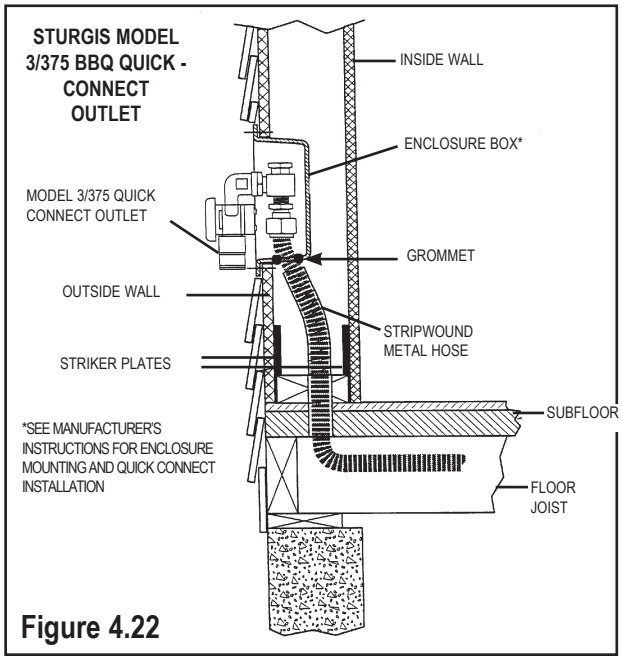

Figure 4.22

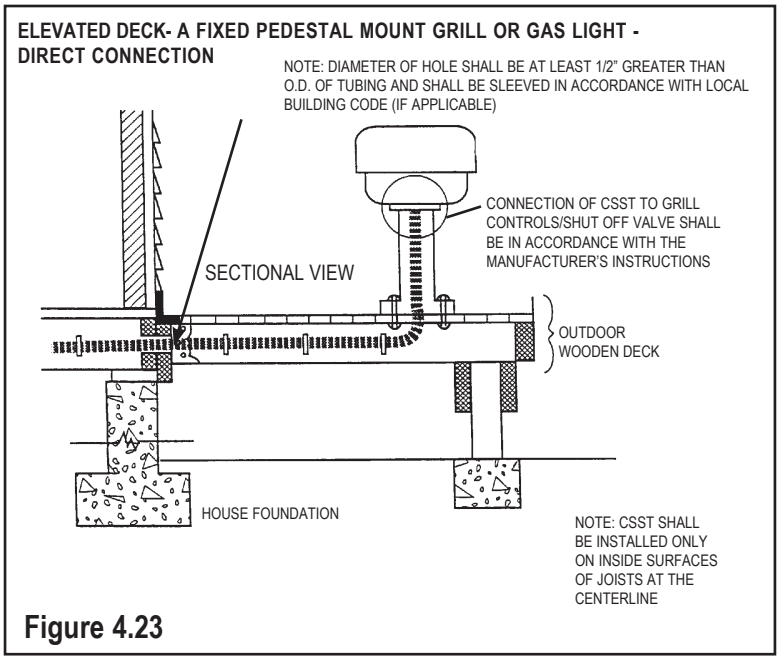

Figure 4.23

GROUND LEVEL GAS LIGHT/PEDESTAL BBQ GRILL - BURIED CONNECTION

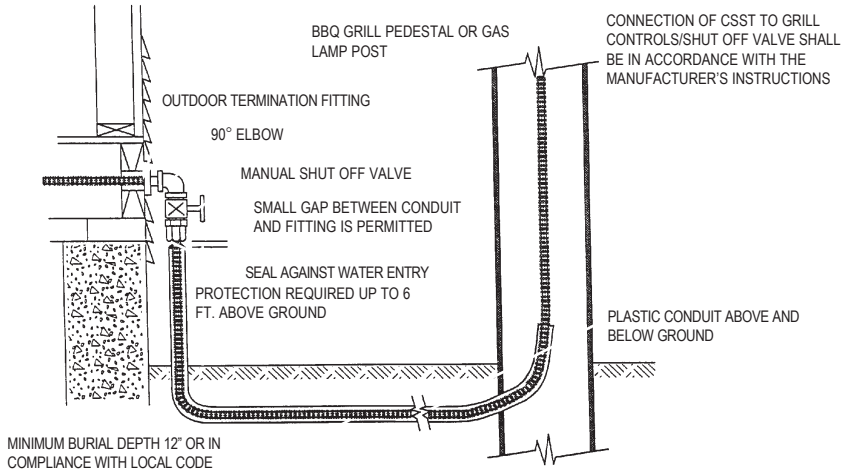

Figure 4.24

4.6.4 SPECIAL APPLICATIONS

A. Roof Top Installations

For a roof top appliance no additional mechanical protection of the tubing is required. Whenever possible, roof penetrations shall include an outdoor termination fitting and shall be located within 6 feet of the equipment to be connected as shown in figure 4.25. All long runs of tubing shall be supported in accordance with minimum support intervals in Table 4.3 and raised above the roof distance determined by local code/practice. WARDFlex®/WARDFlex®MAX routed vertically up the side of a building, to the roof, shall be protected in accordance with section 4.3.6 Outdoor Installation.

LONG OUTDOOR CONNECTION TO ROOF MOUNTED EQUIPMENT

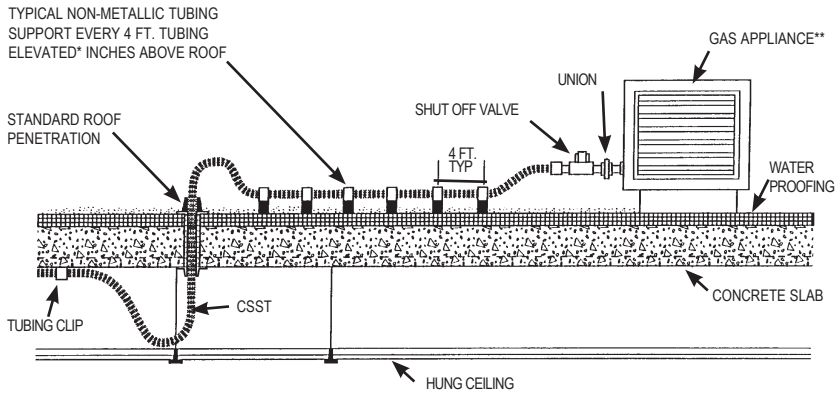

* HEIGHT OF ELEVATION BASED ON LOCAL PLUMBING/BUILDING CODE REQUIREMENTS AND/OR WINTER ICE BUILDUP.
** WHEN THE EQUIPMENT MANUFACTURER REQUIRES THE USE OF A FLEXIBLE CONNECTOR.

Figure 4.25

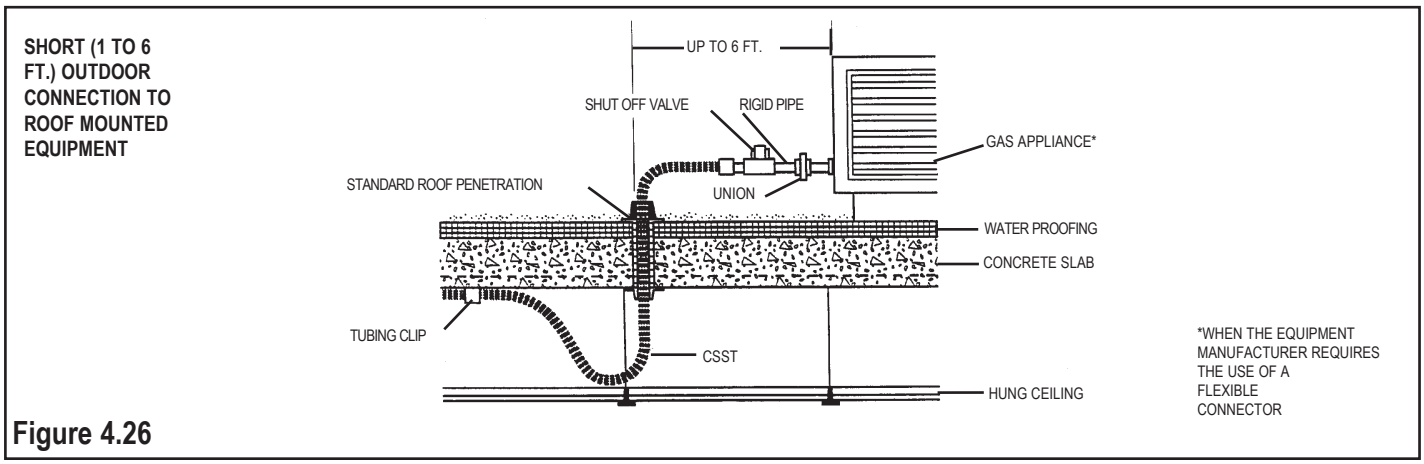

Figure 4.26

B. Infrared Heaters

Infrared heaters mounted from ceilings and walls of structures shall be connected to WARDFlex®/WARDFlex®MAX system as shown in figure 4.27 and installed in accordance with manufacturer's instructions and ANSI 383.6 "Standard for gas fired infrared heaters".

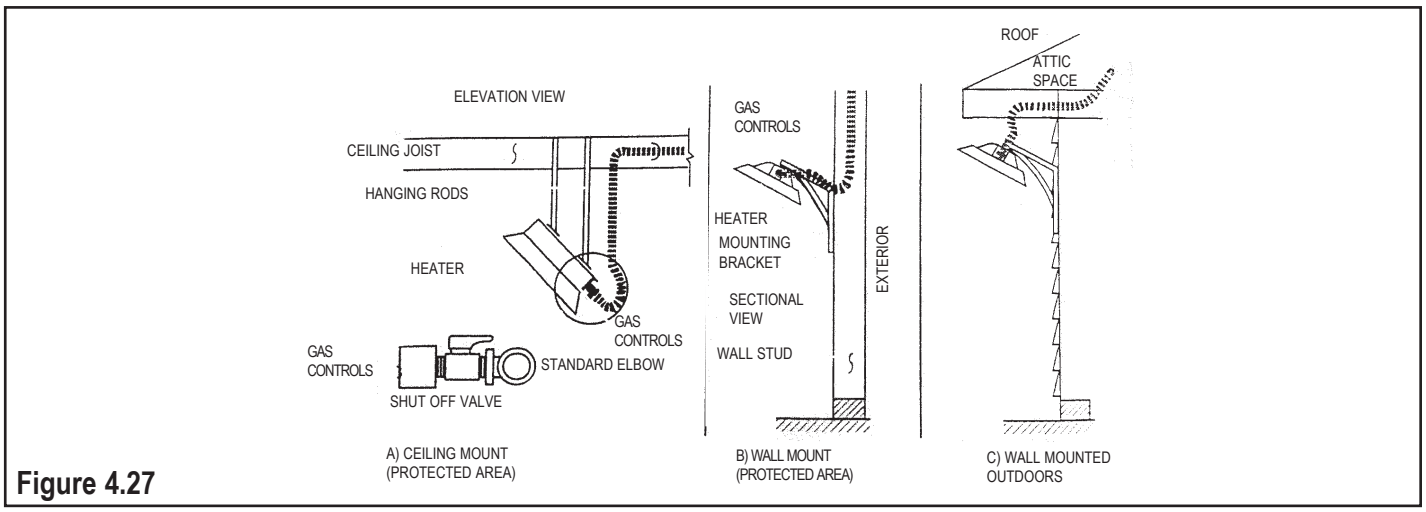

Figure 4.27

C. Pad Mounted Gas Appliances

Gas appliances mounted on concrete pads or blocks, such as heat pumps, air conditioners, pool heaters and NGV refueling systems, shall be connected to the WARDFlex®/WARDFlex®MAX system at a termination fitting using either rigid pipe or an approved outdoor appliance connector as shown in Figure 4.28. Pad mounted equipment (in most cases) is considered "fixed" if not moved for cleaning, maintenance, etc. (i.e. A/C units).

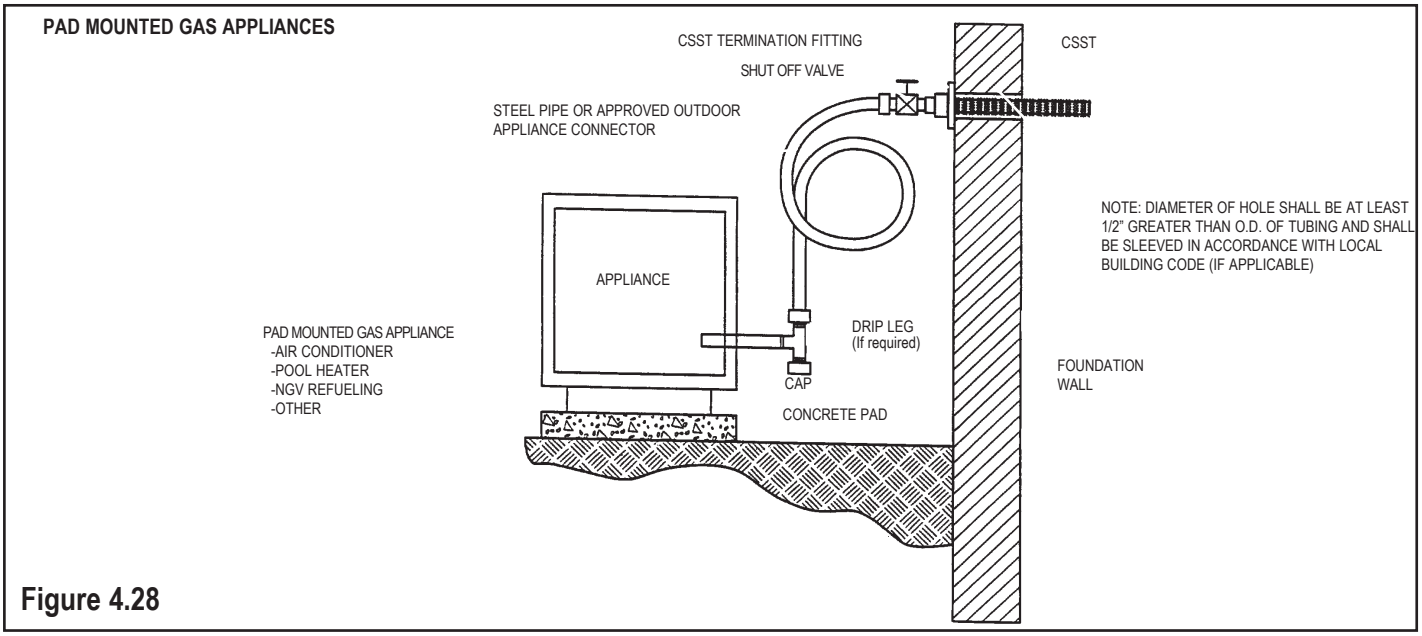

Figure 4.28

4.6.5 GAS FIREPLACES

WARDFlex®/WARDFlex®MAX CSST shall not be routed directly into a metallic fireplace enclosure that utilizes a metallic vent that penetrates a roof line. The CSST connection shall be made outside of the enclosure to a section of rigid metallic pipe.

A. When it is necessary to route WARDFlex® and WARDFlex®MAX through a metallic fireplace enclosure the coating shall be left intact and the use of nonmetallic sleeve or grommet should be used to protect the coating at the point of penetration.

B. When routing WARDFlex® and WARDFlex®MAX through masonry construction, for connection to gas fireplaces and gas logs CSST is required to be sleeved in a non metallic conduit through the masonry structure. The plastic caoting should be left intact, through the sleeved portion of the installation, and the annular space between the jacket and sleeve should be caulked at both the interior and the exterior locations.

C. For any fireplace application where installation of CSST is desired, the WARDFlex® Fireplace Stubout should be used to terminate the CSST outside the enclosure. While other listed installation practices are acceptable this method is preferred to prevent inadvertent damage, that can be caused by the fireplace enclosure, to the CSST.

D. Adherence to local codes and manufacturer's instructions are required, be sure to know and understand all requirements prior to installation.

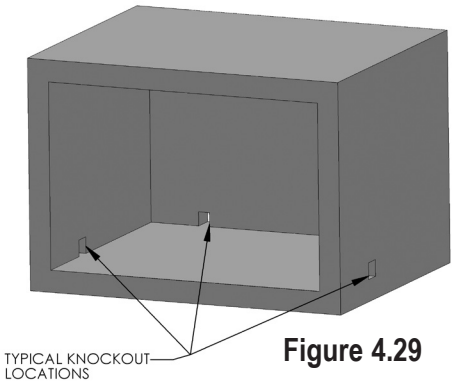

Figure 4.29

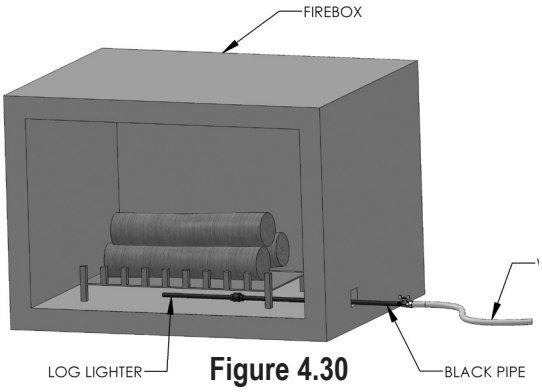

Figure 4.30

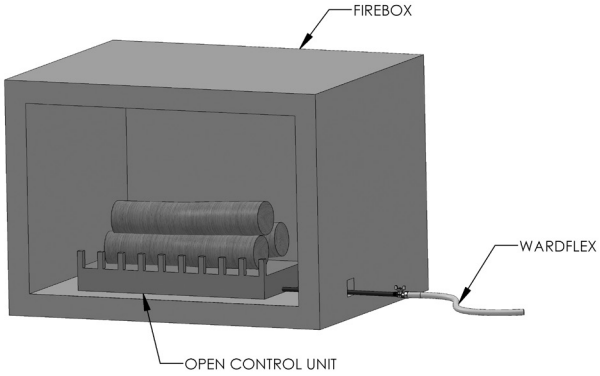

Figure 4.31

4.7 MANIFOLD STATION

A. Manifolds are used where multiple tubing runs are made from a common location forming a parallel system configuration. Manifolds may be a one piece unit manufactured from malleable iron or brass. They may also be constructed as a welded fabrication of steel and subcomponents and brass or malleable iron tee's connected with pipe nipples. See figures 4.33 and 4.34 below for examples of manifolds.

B. Manifolds shall be rigidly installed and may be mounted in any orientaion. Mounting can be done with mounting brackets (figure 4.34), supplied mounting holes on manifolds (if equipped) or rigid piping into a non-movable gas appliance.

C. Manifolds installed in low pressure applications or in locations removed from the regulator, without shutoff valves, may be concealed.

D. A Manifold Station utilizing a pounds to inch regulator (figure 4.35) shall be installed in an accessible location to allow access to the regulator for inspection, service and replacement if required.

E. Installation of manifold stations in an enclosure box or gas load center is permitted. Refer to local code requirements for proper installation techniques and venting requirements.

SINGLE 3 - PORT MANIFOLD WITH ADDED TEE ALLOWING FOUR PORTS

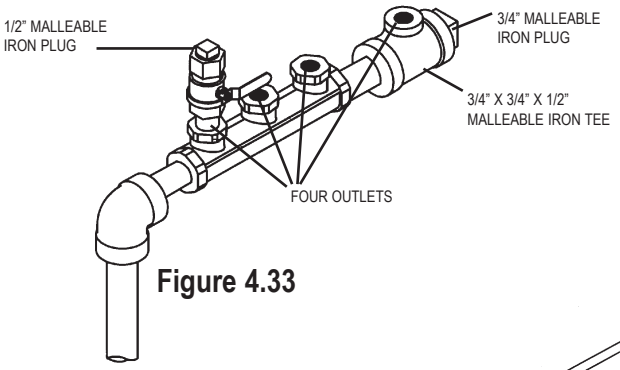

Figure 4.33

SINGLE 3 - PORT MANIFOLD WITH MANIFOLD BRACKET AND WARDFLEX GAS VALVES INSTALLED

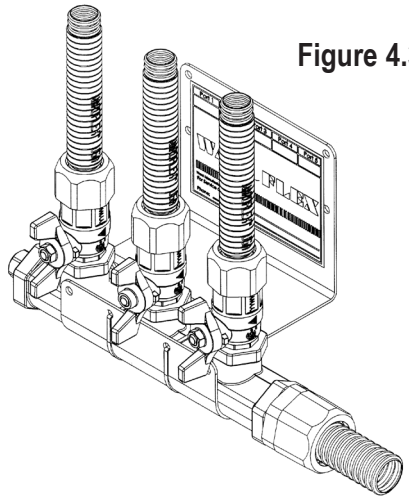

Figure 4.34

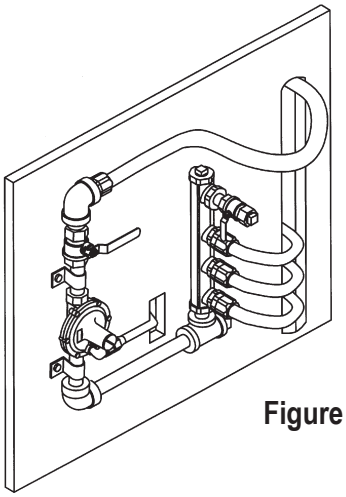

Figure 4.35

4.8 PRESSURE REGULATORS

4.8.1 INSTALLATION REQUIREMENTS

A WARDFlex®/WARDFlex®MAX CSST system utilizing gas line pressures above ½ PSI are required to use a line pressure regulator upstream of the appliances to reduce the line pressure to less than ½ PSI. The regulator shall incorporate construction which will "lock up" under no-flow conditions to limit the downstream pressure to not more than 1/2 PSIG. The regulator shall comply with a nationally recognized standard for pressure regulators.

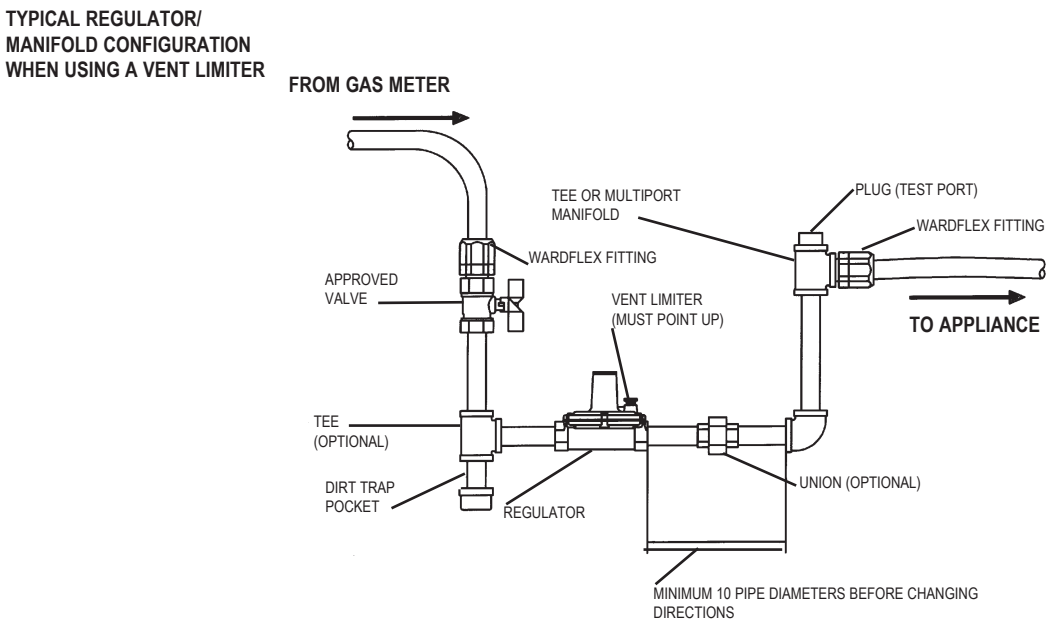

Figure 4.38

Regulators used to reduce elevated system pressure for appliance use must also conform to the following:

- Sized to supply the required appliance load.
- Equipped with an acceptable vent limiting device, supplied by the manufacturer, or be capable of being vented to the outside atmosphere.
- Installed in accordance with manufacturer's printed instructions.
- Installed in an accessible location.
- A CSA Design Certified shut-off valve must be installed upstream of the pressure regulator.

Regulator capacities are listed in table below.

REGULATOR CAPACITIES		
Model	**Maximum Individual Load**	**Maximum Total Load**
325-3D	140,000 BTU/HR	250,000 BTU/HR
325-5E	425,000 BTU/HR	600,000 BTU/HR
325-71B	1,250,000 BTU/HR	1,250,000 BTU/HR
325-3D OP	200,000 BTU/HR	200,000 BTU/HR
325-5E OP	425,000 BTU/HR	425,000 BTU/HR

4.8.2 REGULATOR VENTING REQUIREMENTS

VENT LINES

Venting is required for all regulators to avoid a gas buildup in an enclosed area in the event that the regulator diaphragm ruptures. Vent lines should be properly sized per the manufacturers instructions and installed to ensure proper operation.

VENT LINE INSTALLATION GUIDELINES:

- The vent line shall not be smaller than the vent connected to the pressure regulator.
- The recommended minimum size vent line for the regulator is 1/4 in. nominal ID copper tubing or other approved material. The maximum length installed for this size vent line should be less than 30 feet. Larger diameter vent lines can be used if necessary. In determining the proper size vent line for a particular installation, a test may be necessary with the vent line and regulator under normal use to ensure proper regulator operation. Consult with the regulator manufacturer for limitations of length and size of the vent line.
- The vent shall be designed and installed to prevent the entry of water, insects or other foreign materials that could cause blockage.
- Under no circumstances shall a regulator be vented to the appliance flue or building exhaust system.

VENT LIMITER OPTION:

Vent limiters are an alternate venting option available for Maxitrol 325-3L, 325-5L and 325-7L regulators. When a vent limiter is desired all installation guidelines for the vent limiter and regulator must be followed to ensure proper operation of the unit.

VENT LIMITER INSTALLATION GUIDELINES:

- Regulators must be installed in the horizontal upright position and in a well ventilated area when using a vent limiter. Consult with local code before installation.
- Only a vent limiter supplied by the regulator manufacturer may be used, no piping shall be installed between the regulator and vent limiting device.
- Leak detection fluids may not be used on vent limiters as they can cause corrosion and operational failure.
- Remove the vent limiter and check the vent opening if a leaking diaphragm is suspected. Remember, regulators will “breathe” when regulating, creating a bubble - A leak will blow bubbles constantly. Do not leak test the vent limiter with liquid leak test solution. This action will contaminate the internal ball check mechanism or plug the breathing hole, resulting in erratic regulator operation.
- Vent limiters shall not be used outside or anyplace where they are subject to damage from the environment. Vent protection devices shall be used in outdoor installations.

ACCESSORIES FOR GAS PRESSURE REGULATORS

Vent Limiting Means

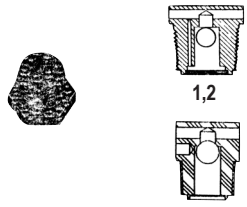

Automatic vent limiting device-ball check permits free inhalation for fast regulator-diaphragm response on opening cycle, but limits gas escapement should a diaphragm rupture. May be used in multi-poise mounting but to achieve quick regulator response it must be mounted in an upright position.

1-IAS certified for 14”W.C. Color-brass 1/8” NPT.

2-IAS certified for 2PSI (LP) and 5 PSI (natural) with 325-3. Color-green 1/8”NPT

3-IAS certified for 2PSI (LP) and 5 PSI (natural) with 325-5A. Color-brass 3/8”NPT

Satisfies ANSI Standards for both natural and LP gas.

Figure 4.39

4.8.3 REGULATOR ADJUSTMENT

- Adjustments can be accomplished by first removing the regulator seal cap to expose the adjusting screw. Turning the screw clockwise will increase outlet pressure, turning it counter-clockwise will decrease pressure.
- If spring adjustment will not produce the desired outlet pressure, check to make sure the main supply pressure is adequate. If the main supply pressure is adequate, contact the manufacturer or WARDFlex® for other line-regulator options. Do not continue to turn regulator adjusting screw clockwise if the outlet pressure readings do not continue to increase. This may result in over firing due to loss of pressure control, should there be a subsequent increase in inlet pressure.
- The 2 PSI system pounds-to-inches regulator can be adjusted to an outlet pressure ranging between 7 to 11 inches water column pressure for natural gas and 11 to 13 inches water column for propane.
  The regulator must be adjusted according to the manufactures recommended procedure. A pressure gauge mounted just downstream of the regulator can monitor the set pressure under various loads.
- The regulator outlet is pre-set and labeled at the factory for either 8" natural gas or 11" propane.
- The "average" natural gas appliance is designed to operate at 3 to 6 inches water column pressure, and a pressure difference of 1 to 2 inches of water column across the appliance regulator which will prevent slow regulator response.

  Thus, the appliance regulator will operate best at 4 to 7 inches W.C. inlet pressure. The pounds to-inches system regulators for natural gas are set to deliver 8 inches of W.C. outlet pressure under load to allow for 1-2 inches of W.C. pressure drop in the tubing.
- The average propane gas appliance is designed to operate at 10 to 10 1/2 inches water column pressure. Thus, the pounds to inches regulators for propane gas are set to deliver 11 inches water column outlet pressure under load to allow for 0.5 inches water column pressure drop in the tubing.

4.8.4 OVER PRESSURIZATION PROTECTION

Gas systems using pressures above 2 PSI up to 5 PSI must use OPD (Over Pressure Protection Devices).

4.9 UNDERGROUND INSTALLATIONS

4.9.1 GENERAL INFORMATION

WARDFlex®/WARDFlex®MAX may not be directly buried or directly embedded in or under concrete slabs.

WARDFlex®/WARDFlex®MAX may be installed underground in/under a concrete slab when routed through previously embedded, non-metallic, watertight conduit such as PVC pipe. Conduit used to protect WARDFlex®/WARDFlex®MAX CSST, when installed underground, must have an I.D. ½" larger than the O.D of the CSST.

For outdoor underground installations, the annular space between the CSST and the conduit must be sealed to prevent entrance of moisture, dirt, debris, and insects. The use of a mechanical joint, coupling, or tee is prohibited inside the conduit.

For indoor buried installations, Ward Manufacturing does not require the conduit to be vented to the outside. Due to its continuous construction and availability in long run lengths, no fittings are permitted inside the conduit. This eliminates the possibility of gas build up caused by leaking fittings after the system has been placed in service. In the event that local code requires the conduit to be vented, the use of a tee designed for use with non-metallic conduit may be placed at the termination end of the conduit. One end of the tee should be sealed while the other outlet can be used to connect a vent line that is routed outside (figure 4.40). Vent lines routed to the outside of a structure must be installed in such a manner to prevent entrance of moisture, dirt, debris, and insects.

BURIAL DEPTHS:

- Outdoors – minimum of 12”
- In slab – 1-1/2” minimum concrete coverage.
- Under slab – no minimum burial depth below slab or in compliance with local codes.

CONDUIT TERMINATION HEIGHT:

- Indoors – Conduit to extend a minimum of 1” above finished floor height.
- Outdoors – Conduit to extend a minimum of 4” above finished grade.

TYPICAL INDOOR INSTALLATION OF CSST WITH NON-METALLIC CONDUIT BURIED UNDER CONCRETE SLAB

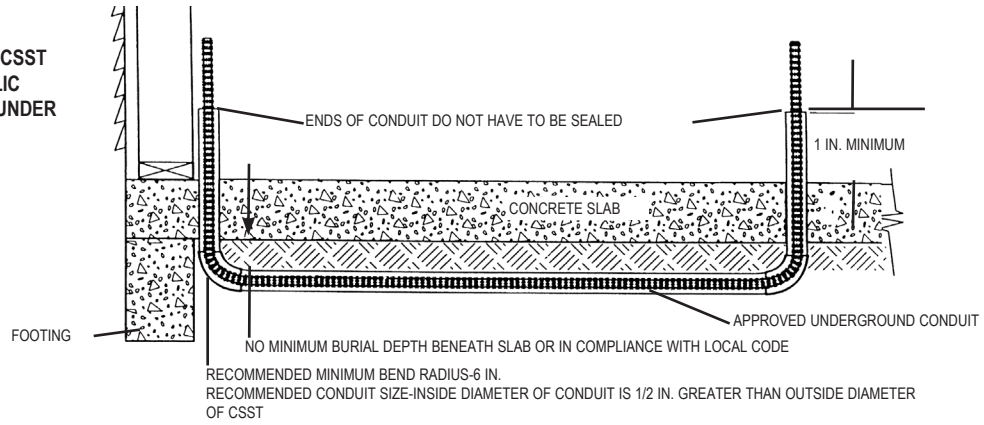

TYPICAL INDOOR INSTALLATION OF CSST WITH NON-METALLIC CONDUIT EMBEDDED IN CONCRETE SLAB

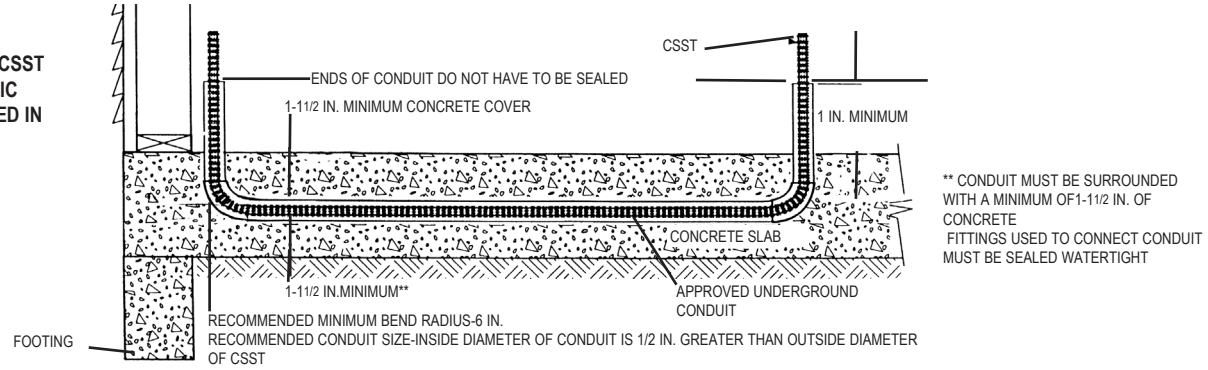

INDOOR INSTALLATION OF CSST WITH NON-METALLIC CONDUIT EMBEDDED IN OR UNDER CONCRETE SLAB WITH VENTING

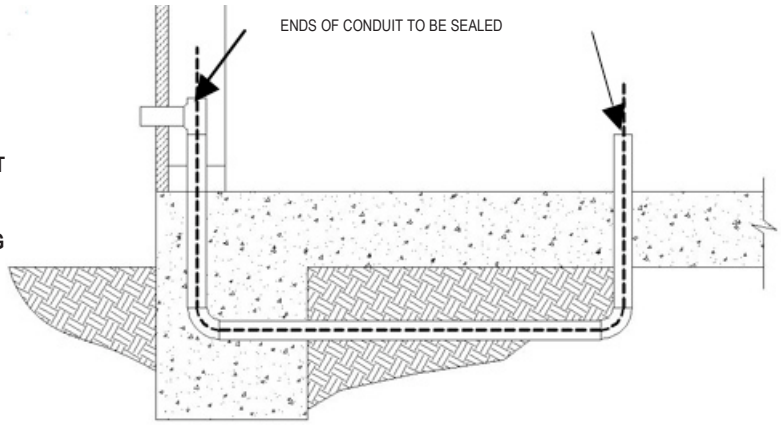

Figure 4.40

4.10 WARDFlex® CSST ELECTRICAL BONDING

• Ward Manufacturing requires the direct bonding of all natural and LP gas piping systems incorporating yellow coated WARDFlex® Corrugated Stainless Steel Tubing (CSST) whether or not the piping system is connected to an electrically powered gas appliance. Direct bonding is included as part of the manufacture's requirements for both single family and multi-family buildings. A person knowledgeable about electrical system design, local electrical code, and these requirements should specify the bonding for commercial applications. WARDFlex® CSST installed inside or attached to the exterior of a building or structure shall be electrically continuous and directly bonded, by a qualified person, to the ground system of the building. The gas piping is considered to be directly bonded when installed in accordance with the following instructions:

• A bonding conductor is permanently and directly connected to the electrical service grounding system. This can be achieved through a connection to the electrical service equipment enclosure, the grounded conductor at the electrical service, the grounding electrode conductor (where of sufficient size) or to the one or more grounding electrodes used.

• A single bond connection is made to the building gas piping downstream of the utility meter or second stage regulator (LP systems), or downstream of the gas meter of each individual housing unit within a multi-family structure. A "daisy chain" configuration of the bonding conductor is permitted for multi-meter installations. A bonding connection shall not be made to the underground, natural gas utility service line or the underground supply line from a LP storage tank.

• The bonding conductor is not to be smaller than a #6 AWG copper wire or equivalent. The bonding conductor is installed and protected in accordance with the NEC.

• When connecting the bonding clamp to one of the approved locations noted below choose a connection location close the electrical service to utilize as short of conductor length as possible. The bonding conductor may be attached, to an accepted location, anywhere in the gas piping system to aid in reducing the bonding conductor length. The length of the bonding conducter shall not exceed 75 feet.

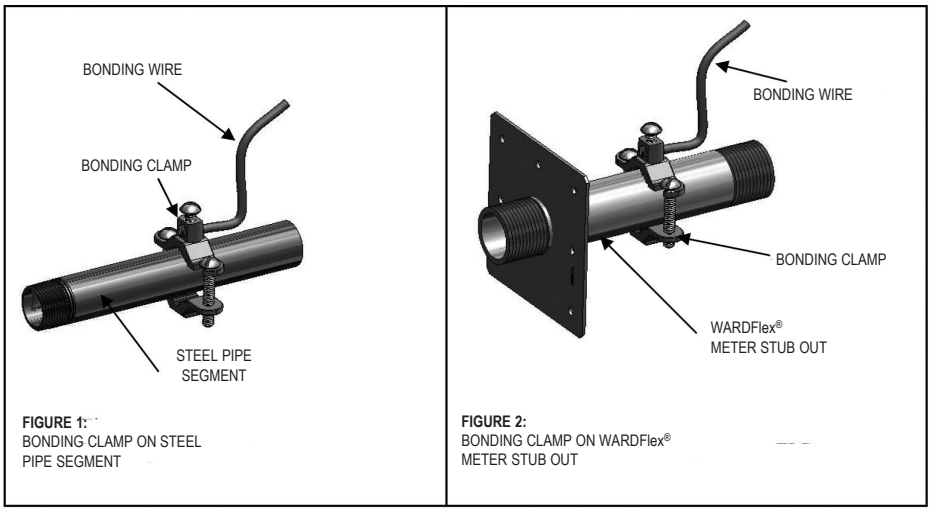

FIGURE 1:
BONDING CLAMP ON STEEL PIPE SEGMENT

FIGURE 2:
BONDING CLAMP ON WARDFlex® METER STUB OUT

Figure 4.41

- The bonding conductor is attached in an approved manner in accordance with NEC and the point of attachment for the bonding conductor is accessible.

- Bonding/grounding clamp used is listed to UL 467 or other acceptable national standards.

- A bonding clamp which is listed for the intended connection location and is manufactured with an appropriate and code listed material is to be attached at one point within the piping system to a segment of rigid pipe, a pipe component such as a nipple, fitting, manifold, or CSST fitting.. The bonding clamp must be attached such that metal to metal contact is achieved with the steel pipe component. Remove any paint or applied coating on the pipe surface beneath the clamp. See Figure 4.41 for guidance. The corrugated stainless steel tubing portion of the gas piping system shall not be used as the point of attachment of the bonding clamp at any location along its length.

Proper grounding and bonding may reduce the risk of damage and fire from a lightning strike. Lightning is a highly destructive force. Even a nearby lightning strike that does not strike a structure directly can cause metallic systems in the structure to become energized. If these types of systems are not properly bonded, the difference in potential between the systems may cause the charge to arc from one system to another system. Arcing can cause damage to CSST. Bonding and grounding as set forth above should reduce the risk of arcing and related damage.

Depending upon conditions specific to the location of the structure in which the WARDFlex® system is being installed, including but not limited to whether or not the area is prone to lightning, the owner of the structure should consider whether or not a lightning protection system is necessary or appropriate. Lightning protection systems are beyond the scope of this bulletin, but are covered by NFPA 780, which is the Standard for the Installation of Lightning Protection Systems, and other standards.

Piping systems incorporating black coated WARDFlex® MAX CSST have no additional bonding requirements imposed by the manufacturer. WARDFlex® MAX may be bonded in accordance with the National Electrical Code NFPA 70 Article 250.104 in the same manner as rigid metallic piping systems. In the event that additional bonding of black coated WARDFlex® MAX is required by local code, the same requirements stated in this section for the direct bonding of yellow coated WARDFlex® shall be followed. It is the responsibility of the trained installer to verify all local code compliance.

5.1 MINIMUM INSPECTION REQUIREMENTS

If the tubing is damaged refer to the following subsections to determine the severity of damage and, if necessary the method of repair.

Classification of Repairs

- No repairs or replacement of the tubing is necessary if the tubing is only slightly dented by crushing as indicated in Figure 5.1.

REPAIR UNNECESSARY - NO SIGNIFICANT DAMAGE TO THE TUBING DUE TO IMPACT OR CRUSHING

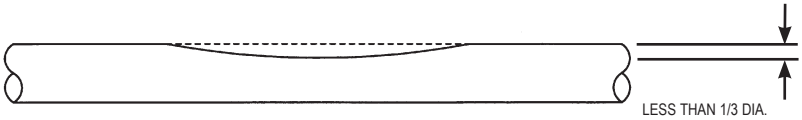

Figure 5.1

- The tubing must be repaired or replaced under the following circumstances:
- The tubing has been significantly damaged (Figure 5.2).
- The tubing has been punctured.
- The tubing has been bent beyond its minimum bend radius so that a crease or kink appears (Figure 5.3).

REPAIR NECESSARY - SIGNIFICANT DAMAGE TO THE TUBING DUE TO IMPACT OR CRUSHING

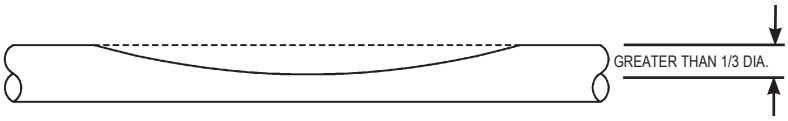

Figure 5.2

5.2 REPAIR/REPLACEMENT OF DAMAGED TUBING

Several methods of repair are discussed below depending on the nature of damage.

REPAIR NECESSARY

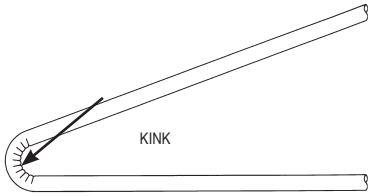

Figure 5.3

WARDFlex® AND OTHER DESIGNS ARE NOT INTERCHANGEABLE. DO NOT MIX COMPONENTS.

In the case of the Outdoor Termination Fitting, install new O-Rings. The installer shall determine the most reliable and economical method of repair using one of the following methods:

- **Replace the entire tubing run.** In most cases, when the tubing run is short and easily accessible, it can be replaced faster and more economically than repairing the damaged section. This is the preferred method because extra fittings are not required.
- **Repair the damaged section**. The damaged tubing can be repaired by each of following two methods.

Method 1: Remove the section of tubing which is damaged and reconnect the new ends with a single mechanical coupling. Use this repair method if the damaged section is small and if there is enough slack tubing in the run to make-up for the removed damaged length.

Method 2: Remove the section of tubing which is damaged and repair/replace as illustrated in figure 5.4.

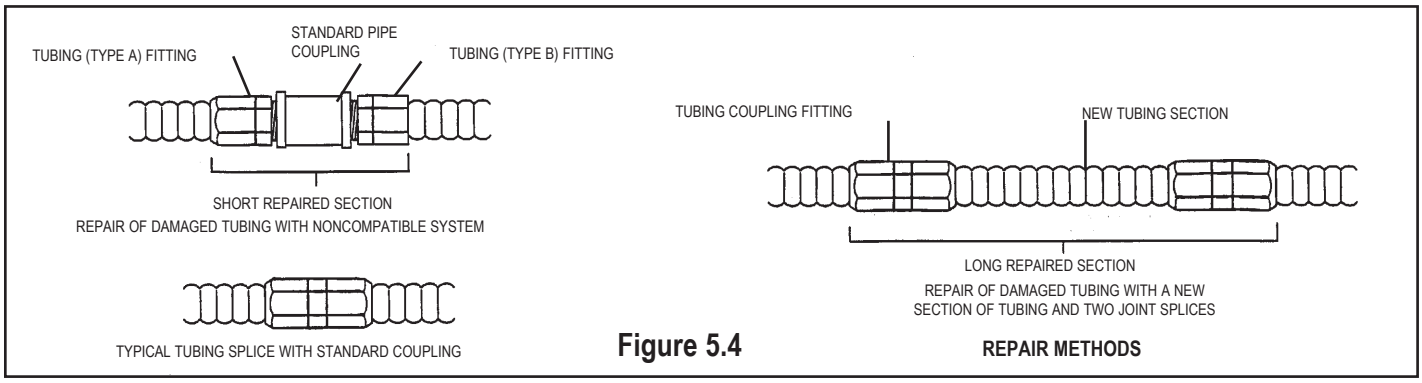

Figure 5.4 **REPAIR METHODS**

Appliance Connection and Leakage Check Procedure

- After the pressure test, inspection and final construction is complete (finished interior walls), connect the appliances to the tubing system.
- Turn the gas on at the meter and inspect for leaks before operating the appliance. Regulator adjustment may be necessary on 2 PSIG systems (refer to manufacturer's instruction) to obtain proper appliance line pressure.
- Connections made at each appliance must be checked for leaks with a non-corrosive commercial leak-testing fluid due to lack of sensitivity in solutions using soap buds or household detergents as stated in ASTM E515-05 section 9.3. Any leak detection solution coming in contact with the WARDFLEX System should have a sulfur and halogen content of less than 10 ppm of each (ASTM E515-05 section 7.4).
- Before placing appliances in operation, the piping system should be purged. This displaces the air in the system with fuel gas. Purge into a well ventilated area.

6.1 PRESSURE TESTING AND INSPECTION PROCEDURE

- The final installation is to be inspected and tested for leaks at 1 1/2 times the maximum working pressure, but not less than 3 PSIG, using procedures specified in Chapter 7 "Inspection, Testing and Purging" of the National Fuel Gas Code, NFPA 54/ANSI Z223.1 In Canada, refer to the applicable sections of the CAN/CGA - B149 Installation codes.
- Maximum test pressures recommended for all WARDFlex® and WARDFlex® MAX sizes is - 40 PSI. Excess pressure will permanently distort tubing.
- Do not connect appliances until after pressure test is completed.
- Inspect the installed system to ensure:
  - Presence of listed striker plates and other protective devices at all required locations.
  - Acceptable physical condition of the tubing.
  - Presence of fittings (with nut bottomed out to the body).
  - Correct regulator and manifold arrangement with proper venting requirements.
  - All gas outlets for appliance connections should be capped during pressure testing.
  - Pressure testing should be performed during rough construction of the facility (before interior walls are finished). This will permit a more complete inspection of the piping system during the pressure testing.
  - The elevated pressure system requires a two-part pressure test. (See Figure 6.1)
    - The first part is performed on the elevated pressure section, between the meter connection and the pressure regulator.
    - The second part is performed on the low pressure section, between the pressure regulator and the individual gas appliance outlets.

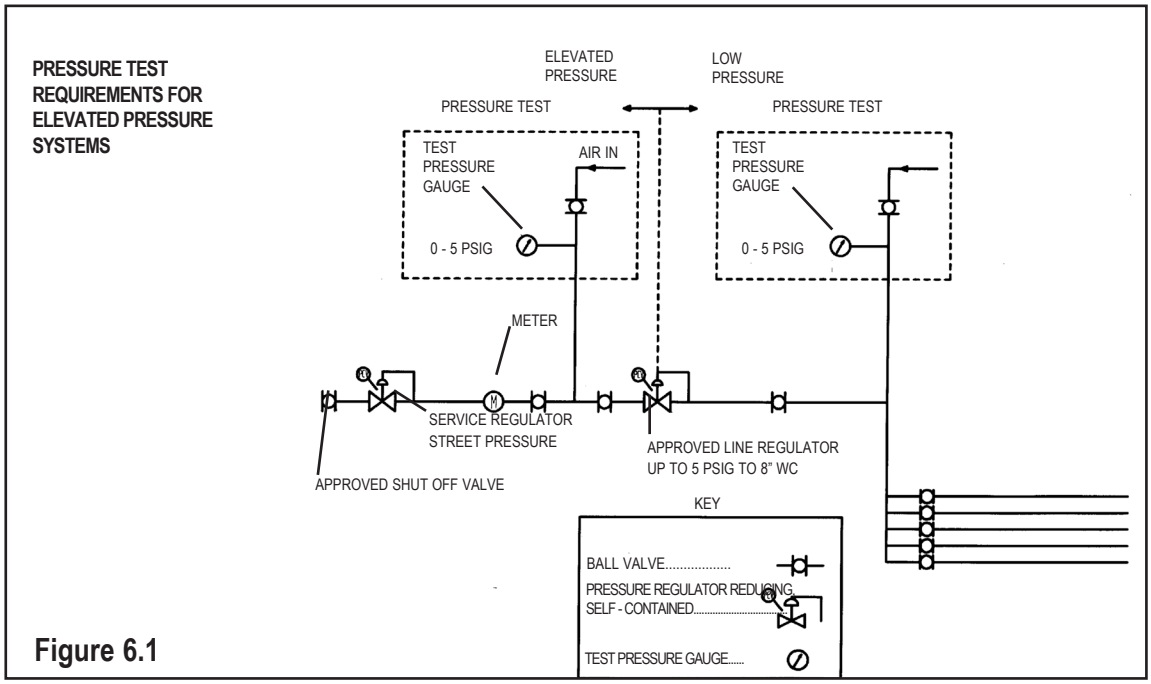

Figure 6.1

7.0 SIZING TABLES (NATURAL AND LP)

Table **Page**

A-1 Natural Gas-Low Pressure Maximum Capacity of WARDFlex®/WARDFlex®MAX CSST in Cubic Feet per Hour (CFH) 60
for Gas Pressure of 0.5 PSI or less and Pressure Drop of 0.5 in.WC

A-2 Natural Gas-Low Pressure Maximum Capacity of WARDFlex®/WARDFlex®MAX CSST in Cubic Feet per Hour (CFH) 60
for Gas Pressure of 0.5 PSI or less and Pressure Drop of 1.0 in.WC

A-3 Natural Gas-Low Pressure Maximum Capacity of WARDFlex®/WARDFlex®MAX CSST in Cubic Feet per Hour (CFH) 61
for Gas Pressure of 0.5 PSI or less and Pressure Drop of 1.5 in.WC

A-4 Natural Gas-Low Pressure Maximum Capacity of WARDFlex®/WARDFlex®MAX CSST in Cubic Feet per Hour (CFH) 61
for Gas Pressure of 0.5 PSI or less and Pressure Drop of 2.0 in.WC

A-5 Natural Gas-Low Pressure Maximum Capacity of WARDFlex®/WARDFlex®MAX CSST in Cubic Feet per Hour (CFH) 62
for Gas Pressure of 0.5 PSI or less and Pressure Drop of 2.5 in.WC

A-6 Natural Gas-Low Pressure Maximum Capacity of WARDFlex®/WARDFlex®MAX CSST in Cubic Feet per Hour (CFH)....62
for Gas Pressure of 0.5 PSI or less and Pressure Drop of 3.0 in.WC

A-7 Natural Gas-Low Pressure Maximum Capacity of WARDFlex®/WARDFlex®MAX CSST in Cubic Feet per Hour (CFH) 63
for Gas Pressure of 0.5 PSI or less and Pressure Drop of 4.0 in.WC

A-8 Natural Gas-Low Pressure Maximum Capacity of WARDFlex®/WARDFlex®MAX CSST in Cubic Feet per Hour (CFH) 63
for Gas Pressure of 0.5 PSI or less and Pressure Drop of 5.0 in.WC

A-9 Natural Gas-Low Pressure Maximum Capacity of WARDFlex®/WARDFlex®MAX CSST in Cubic Feet per Hour (CFH) 64
for Gas Pressure of 0.5 PSI or less and Pressure Drop of 6.0 in.WC

A-10 Natural Gas-Elevated Pressure Maximum Capacity of WARDFlex®/WARDFlex®MAX CSST in Cubic Feet per Hour (CFH)....65
for Gas Pressure of 1.0 PSI and Pressure Drop of 13.0 in.WC

A-11 Natural Gas-Elevated Pressure Maximum Capacity of WARDFlex®/WARDFlex®MAX CSST in Cubic Feet per Hour (CFH)....65
for Gas Pressure of 2.0 PSI and Pressure Drop of 1.0 PSI

A-12 Natural Gas-Elevated Pressure Maximum Capacity of WARDFlex®/WARDFlex®MAX CSST in Cubic Feet per Hour (CFH)....66
for Gas Pressure of 2.0 PSI and Pressure Drop of 1.5 PSI

A-13 Natural Gas-Elevated Pressure Maximum Capacity of WARDFlex®/WARDFlex®MAX CSST in Cubic Feet per Hour (CFH) 66
for Gas Pressure of 5.0 PSI and Pressure Drop of 3.5 PSI

A-14 Natural Gas-Elevated Pressure Maximum Capacity of WARDFlex®/WARDFlex®MAX CSST in Cubic Feet per Hour (CFH) 67
or Gas Pressure of 10.0 PSI and Pressure Drop of 7.0 PSI

A-15 Natural Gas-Elevated Pressure Maximum Capacity of WARDFlex®/WARDFlex®MAX CSST in Cubic Feet per Hour (CFH) 67
for Gas Pressure of 25.0 PSI and Pressure Drop of 10.0 PSI

A-16 Propane Gas-Low Pressure Maximum Capacity of WARDFlex®/WARDFlex®MAX CSST in Thousands of BTU (KBTU) 68
for Gas Pressure of 0.5 PSI or less and Pressure Drop of 0.5 in.WC

A-17 Propane Gas-Low Pressure Maximum Capacity of WARDFlex®/WARDFlex®MAX CSST in Thousands of BTU (KBTU) 68
for Gas Pressure of 0.5 PSI or less and Pressure Drop of 1.0 in.WC

A-18 Propane Gas-Low Pressure Maximum Capacity of WARDFlex®/WARDFlex®MAX CSST in Thousands of BTU (KBTU) 69
for Gas Pressure of 0.5 PSI or less and Pressure Drop of 2.0 in.WC

A-19 Propane Gas- Low Pressure Maximum Capacity of WARDFlex®/WARDFlex®MAX CSST in Thousands of BTU (KBTU) 69
for Gas Pressure of 0.5 PSI or less and Pressure Drop of 2.5 in.WC

A-20 Propane Gas- Low Pressure Maximum Capacity of WARDFlex®/WARDFlex®MAX CSST in Thousands of BTU (KBTU) 70
for Gas Pressure of 0.5 PSI or less and Pressure Drop of 3.0 in.WC

A-21 Propane Gas- Low Pressure Maximum Capacity of WARDFlex®/WARDFlex®MAX CSST in Thousands of BTU (KBTU) 70
for Gas Pressure of 0.5 PSI or less and Pressure Drop of 6.0 in.WC

A-22 Propane Gas-Elevated Pressure Maximum Capacity of WARDFlex®/WARDFlex®MAX CSST in Thousands of BTU (KBTU) 71
for Gas Pressure of 2.0 PSI and Pressure Drop of 1.0 PSI

A-23 Propane Gas-Elevated Pressure Maximum Capacity of WARDFlex®/WARDFlex®MAX CSST in Thousands of BTU (KBTU) 71
for Gas Pressure of 5.0 PSI and Pressure Drop of 3.5 PSI

A-24 Propane Gas-Elevated Pressure Maximum Capacity of WARDFlex®/WARDFlex®MAX CSST in Thousands of BTU (KBTU) 72
for Gas Pressure of 10.0 PSI and Pressure Drop of 7.0 PSI

A-25 Propane Gas-Elevated Pressure Maximum Capacity of WARDFlex®/WARDFlex®MAX CSST in Thousands of BTU (KBTU) 72
for Gas Pressure of 25.0 PSI and Pressure Drop of 10.0 PSI

A-26 Steel Pipe Capacities Maximum Capacity of Steel Pipe in Cubic Feet per Hour (CFH)....73
for Gas Pressure of 0.5 PSI or less and Pressure Drop of 0.5 in.WC

A-27 Steel Pipe Capacities Maximum Capacity of Steel Pipe in Cubic Feet per Hour (CFH) of Natural Gas 73
for Gas Pressure of 0.5 PSI or less and Pressure Drop of 1.0 in.WC

A-28 WARDFLEX/WARDFlex®MAX Pressure Drop per Foot 74-75

A-29 SCHEDULE 40 Black Iron Pipe Pressure Drop per Foot....76-77

A-30 Polyethylene Pipe Pressure Drop per Foot 78-79

A-31 WARDFLEX/WARDFlex®MAX Pressure Drop per Foot Propane Gas....80-81

A-32 SCHEDULE 40 Black Iron Pipe Pressure Drop per Foot Propane Gas 82-83

Important Note:

When choosing a pressure drop to size the WARDFlex® system the minimum operating pressure of the unit must be considered. Choosing a pressure drop that will reduce the supply pressure below the minimum operating pressure of the unit will cause the unit to perform poorly or not at all.

Example:

System Supply Pressure: 7 inches W.C. Unit minimum operating pressure: 5" W.C.

The use of a 3 inch W.C. pressure drop would result in a minimum inlet pressure at the unit of 4 inches W.C. In this case an alternate pressure drop of 2 inches or less should be selected to meet the minimum operating pressure of the unit.

7.1 NATURAL GAS - LOW PRESSURE

Maximum Capacity of WARDFlex®/WARDFlex®MAX CSST in Cubic Feet per Hour (CFH) of Natural Gas (Approximately 1000 BTU per cubic foot)

Table A-1

Gas Pressure of: 0.5 psi or Less
Pressure Drop of: 0.5 inches W.C.
(based on a 0.60 specific gravity gas)

Tubing Length (Ft.)	10A	15A	20A	25A	32A	38A	50A
Size	**3/8"**	**1/2"**	**3/4"**	**1"**	**1-1/4"**	**1-1/2"**	**2"**
EHD	**15**	**19**	**25**	**31**	**39**	**48**	**62**
5	63	155	270	497	1150	2167	3993
10	44	104	192	357	830	1544	2880
15	36	83	157	294	686	1267	2379
20	31	70	137	256	600	1101	2077
25	27	62	122	230	540	987	1870
30	25	56	112	212	496	903	1716
40	21	47	97	185	433	784	1498
50	19	42	87	167	390	703	1348
60	17	39	80	153	358	643	1237
70	16	36	74	143	333	597	1151
80	15	33	69	134	313	559	1080
90	14	31	65	127	296	528	1022
100	13	30	62	121	281	501	972
125	12	27	57	109	253	452	875
150	10	24	53	100	233	419	803
200	9	21	47	88	203	372	701
250	8	19	43	79	183	339	631
300	7	17	40	73	169	314	579
400	6	15	36	63	148	279	506
500	5	13	33	57	134	254	455
600	5	12	31	52	123	236	418
700	4	11	29	49	115	221	388
800	4	10	27	46	108	209	365
900	4	10	26	43	102	199	345
1000	4	9	25	41	97	190	328
1100	3	9	24	40	93	183	314
1200	3	8	23	38	90	177	301
1300	3	8	23	37	86	171	290
1400	3	8	22	35	84	166	280
1500	3	7	21	34	81	161	271

Table A-2

Gas Pressure of: 0.5 psi or Less
Pressure Drop of: 1.0 inches W.C.
(based on a 0.60 specific gravity gas)

Tubing Length (Ft.)	10A	15A	20A	25A	32A	38A	50A
Size	**3/8"**	**1/2"**	**3/4"**	**1"**	**1-1/4"**	**1-1/2"**	**2"**
EHD	**15**	**19**	**25**	**31**	**39**	**48**	**62**
5	90	192	379	692	1592	3040	5536
10	63	135	270	497	1150	2167	3993
15	51	110	221	409	951	1777	3298
20	44	95	192	357	830	1544	2880
25	39	85	172	321	748	1385	2592
30	36	77	157	294	686	1267	2379
40	31	67	137	256	600	1101	2077
50	27	60	122	230	540	987	1870
60	25	55	112	211	496	903	1716
70	23	51	104	196	461	837	1595
80	21	47	97	184	433	784	1498
90	20	45	92	174	410	740	1417
100	19	42	87	165	390	703	1348
125	17	38	78	148	351	631	1214
150	15	34	71	136	322	577	1114
200	13	30	62	118	281	501	972
250	12	27	56	106	253	449	875
300	10	24	51	97	233	411	803
400	9	21	44	85	203	357	701
500	8	19	40	76	183	320	631
600	7	17	36	70	168	293	579
700	7	16	34	65	156	272	539
800	6	15	32	61	147	254	506
900	6	14	30	57	139	240	478
1000	5	13	28	55	132	228	455
1100	5	12	27	52	126	218	435
1200	5	12	26	50	121	209	418
1300	5	11	25	48	117	201	402
1400	4	11	24	46	113	193	388
1500	4	11	23	45	109	187	376

Table includes losses for four 90 degree bends and 2 end fittings. To compute flow capacity for tubing runs with a larger number of bends and/or fittings, add the appropriate number of feet to the actual run length using the following formula:
L = 1.3 (n) L = Numbers of feet to be added to actual run length. n = Number of bends and/or fittings over six.

Maximum Capacity of WARDFlex®/WARDFlex®MAX CSST in Cubic Feet per Hour (CFH) of Natural Gas (Approximately 1000 BTU per cubic foot)

Table A-3

Gas Pressure of: 0.5 psi or Less
Pressure Drop of: 1.5 inches W.C.
(based on a 0.60 specific gravity gas)

Tubing Length (Ft.)	Size	10A	15A	20A	25A	32A	38A	50A
		3/8"	1/2"	3/4"	1"	1-1/4"	1-1/2"	2"
	EHD	15	19	25	31	39	48	62
	5	112	236	462	840	1926	3705	6703
	10	78	166	329	603	1391	2641	4834
	15	63	135	270	497	1150	2167	3993
	20	54	116	234	433	1005	1882	3487
	25	48	104	210	389	905	1688	3139
	30	44	95	192	357	830	1544	2880
	40	38	82	167	311	725	1342	2515
	50	34	73	149	279	653	1203	2264
	60	31	67	137	256	600	1101	2077
	70	28	62	127	238	558	1021	1932
	80	26	58	119	223	524	956	1814
	90	25	55	112	211	496	903	1716
	100	23	52	106	200	472	857	1633
	125	21	46	95	180	425	769	1470
	150	19	42	87	165	390	703	1348
	200	16	37	76	144	341	611	1177
	250	14	33	68	129	307	548	1060
	300	13	30	62	118	281	501	972
	400	11	26	54	103	246	435	849
	500	10	23	48	93	221	390	764
	600	9	21	44	85	203	357	701
	700	8	19	41	79	189	331	652
	800	8	18	38	74	177	310	612
	900	7	17	36	70	168	293	579
	1000	7	16	35	66	160	278	551
	1100	6	15	33	63	153	265	527
	1200	6	15	32	61	147	254	506
	1300	6	14	30	59	141	245	487
	1400	6	14	29	56	136	236	470
	1500	5	13	28	55	132	228	455

Table A-4

Gas Pressure of: 0.5 psi or Less
Pressure Drop of: 2.0 inches W.C.
(based on a 0.60 specific gravity gas)

Tubing Length (Ft.)	Size	10A	15A	20A	25A	32A	38A	50A
		3/8"	1/2"	3/4"	1"	1-1/4"	1-1/2"	2"
	EHD	15	19	25	31	39	48	62
	5	130	273	532	964	2205	4265	7676
	10	90	192	379	692	1592	3040	5536
	15	73	156	311	570	1316	2493	4573
	20	63	135	270	497	1150	2167	3993
	25	56	120	242	447	1036	1943	3594
	30	51	110	221	409	951	1777	3298
	40	44	95	192	357	830	1544	2880
	50	39	85	172	321	748	1385	2592
	60	36	77	157	294	686	1267	2379
	70	33	72	146	273	638	1175	2212
	80	31	67	137	256	600	1101	2077
	90	29	63	129	242	567	1039	1965
	100	27	60	122	230	540	987	1870
	125	24	53	110	207	486	885	1683
	150	22	49	100	189	446	809	1544
	200	19	42	87	165	390	703	1348
	250	17	38	78	148	351	631	1214
	300	15	34	71	136	322	577	1114
	400	13	30	62	118	281	501	972
	500	12	27	56	106	253	449	875
	600	10	24	51	97	233	411	803
	700	10	22	47	91	216	381	747
	800	9	21	44	85	203	357	701
	900	8	20	42	80	192	337	663
	1000	8	19	40	76	183	320	631
	1100	8	18	38	73	175	306	603
	1200	7	17	36	70	168	293	579
	1300	7	16	35	67	162	282	558
	1400	7	16	34	65	156	272	539
	1500	6	15	33	63	151	263	521

Table includes losses for four 90 degree bends and 2 end fittings. To compute flow capacity for tubing runs with a larger number of bends and/or fittings, add the appropriate number of feet to the actual run length using the following formula:
L = 1.3 (n) L = Numbers of feet to be added to actual run length. n = Number of bends and/or fittings over six.

Maximum Capacity of WARDFlex®/WARDFlex®MAX CSST in Cubic Feet per Hour (CFH) of Natural Gas (Approximately 1000 BTU per cubic foot)

Table A-5

Gas Pressure of: 0.5 psi or Less
Pressure Drop of: 2.5 inches W.C.
(based on a 0.60 specific gravity gas)

Tubing Length (Ft.)	Size	10A	15A	20A	25A	32A	38A	50A
		3/8"	1/2"	3/4"	1"	1-1/4"	1-1/2"	2"
	EHD	15	19	25	31	39	48	62
	5	145	306	593	1076	2449	4756	8527
	10	102	215	423	770	1768	3390	6151
	15	82	175	346	634	1462	2781	5080
	20	71	151	301	553	1277	2416	4436
	25	63	135	270	497	1150	2167	3993
	30	57	123	247	455	1056	1982	3664
	40	49	106	214	397	922	1722	3200
	50	44	95	192	357	830	1544	2880
	60	40	86	176	327	762	1413	2643
	70	37	80	163	304	709	1310	2458
	80	34	75	152	285	666	1227	2308
	90	32	71	144	269	630	1159	2183
	100	31	67	137	256	600	1101	2077
	125	27	60	122	230	540	987	1870
	150	25	55	112	211	496	903	1716
	200	21	47	97	184	433	784	1498
	250	19	42	87	165	390	703	1348
	300	17	39	80	151	358	643	1237
	400	15	33	69	132	313	559	1080
	500	13	30	62	118	281	501	972
	600	12	27	57	108	258	458	892
	700	11	25	53	101	240	425	830
	800	10	23	49	94	226	398	779
	900	9	22	47	89	213	376	737
	1000	9	21	44	85	203	357	701
	1100	9	20	42	81	194	341	670
	1200	8	19	41	78	186	327	643
	1300	8	18	39	75	180	314	620
	1400	7	18	38	72	173	303	598
	1500	7	17	36	70	168	293	579

Table A-6

Gas Pressure of: 0.5 psi or Less
Pressure Drop of: 3.0 inches W.C.
(based on a 0.60 specific gravity gas)

Tubing Length (Ft.)	Size	10A	15A	20A	25A	32A	38A	50A
		3/8"	1/2"	3/4"	1"	1-1/4"	1-1/2"	2"
	EHD	15	19	25	31	39	48	62
	5	160	336	649	1384	2668	5199	9293
	10	112	236	462	957	1926	3705	6703
	15	90	192	379	771	1592	3040	5536
	20	78	166	329	662	1391	2641	4834
	25	69	148	295	588	1253	2368	4352
	30	63	135	270	533	1150	2167	3993
	40	54	118	234	458	1005	1882	3487
	50	48	106	210	406	905	1688	3139
	60	44	97	192	369	830	1544	2880
	70	41	90	178	340	772	1432	2678
	80	38	85	167	316	725	1342	2515
	90	36	80	157	297	690	1267	2379
	100	34	76	149	281	660	1203	2264
	125	30	69	134	251	601	1079	2038
	150	27	63	122	230	557	987	1870
	200	23	55	106	200	493	857	1633
	250	21	50	95	180	449	769	1470
	300	19	45	87	165	416	703	1348
	400	16	40	76	144	369	615	1177
	500	14	36	68	129	336	555	1060
	600	13	33	62	118	311	510	972
	700	12	30	57	110	291	475	904
	800	11	29	54	103	275	446	849
	900	10	27	51	97	262	423	803
	1000	10	26	48	93	251	403	764
	1100	9	25	46	89	241	385	731
	1200	9	24	44	85	232	370	701
	1300	9	23	43	82	224	357	675
	1400	8	22	41	79	218	345	652
	1500	8	21	40	76	211	334	631

Table includes losses for four 90 degree bends and 2 end fittings. To compute flow capacity for tubing runs with a larger number of bends and/or fittings, add the appropriate number of feet to the actual run length using the following formula:
L = 1.3 (n) L = Numbers of feet to be added to actual run length. n = Number of bends and/or fittings over six.

Maximum Capacity of WARDFlex®/WARDFlex®MAX CSST in Cubic Feet per Hour (CFH) of Natural Gas (Approximately 1000 BTU per cubic foot)

Table A-7

Gas Pressure of: 0.5 psi or Less
Pressure Drop of: 4.0 inches W.C.
(based on a 0.60 specific gravity gas)

Tubing Length (Ft.)	Size	10A	15A	20A	25A	32A	38A	50A
		3/8"	1/2"	3/4"	1"	1-1/4"	1-1/2"	2"
	EHD	15	19	25	31	39	48	62
	5	186	389	747	1370	3053	5983	10665
	10	130	273	532	964	2205	4265	7676
	15	105	222	436	794	1823	3498	6341
	20	90	192	379	692	1592	3040	5536
	25	81	171	340	622	1434	2726	4984
	30	73	156	311	570	1316	2493	4573
	40	63	135	270	497	1150	2167	3993
	50	56	120	242	447	1036	1943	3594
	60	51	110	221	409	951	1777	3298
	70	47	101	205	380	884	1648	3067
	80	44	95	192	357	830	1544	2880
	90	41	89	181	337	786	1458	2724
	100	39	85	172	321	748	1385	2592
	125	35	76	154	288	673	1242	2334
	150	32	69	141	264	618	1136	2141
	200	27	60	122	230	540	987	1870
	250	24	53	110	207	486	885	1683
	300	22	49	100	189	446	809	1544
	400	19	42	87	165	390	703	1348
	500	17	38	78	148	351	631	1214
	600	15	34	71	136	322	577	1114
	700	14	32	66	126	300	535	1036
	800	13	30	62	118	281	501	972
	900	12	28	58	112	266	473	920
	1000	12	27	56	106	253	449	875
	1100	11	25	53	102	242	429	837
	1200	10	24	51	97	233	411	803
	1300	10	23	49	94	224	395	773
	1400	10	22	47	91	216	381	747
	1500	9	22	46	88	209	369	723

Table A-8

Gas Pressure of: 0.5 psi or Less
Pressure Drop of: 5.0 inches W.C.
(based on a 0.60 specific gravity gas)

Tubing Length (Ft.)	Size	10A	15A	20A	25A	32A	38A	50A
		3/8"	1/2"	3/4"	1"	1-1/4"	1-1/2"	2"
	EHD	15	19	25	31	39	48	62
	5	208	436	833	1536	3391	6672	11888
	10	145	306	593	1076	2449	4756	8527
	15	118	249	486	883	2024	3901	7044
	20	102	215	423	770	1768	3390	6151
	25	90	192	379	692	1592	3040	5536
	30	82	175	346	634	1462	2781	5080
	40	71	151	301	553	1277	2416	4436
	50	63	135	270	497	1150	2167	3993
	60	57	123	247	455	1056	1982	3664
	70	53	113	229	423	982	1838	3407
	80	49	106	214	397	922	1722	3200
	90	46	100	202	375	873	1626	3027
	100	44	95	192	357	830	1544	2880
	125	39	85	172	321	748	1385	2592
	150	36	77	157	294	686	1267	2379
	200	31	67	137	256	600	1101	2077
	250	27	60	122	230	540	987	1870
	300	25	55	112	211	496	903	1716
	400	21	47	97	184	433	784	1498
	500	19	42	87	165	390	703	1348
	600	17	39	80	151	358	643	1237
	700	16	36	74	140	333	597	1151
	800	15	33	69	132	313	559	1080
	900	14	31	65	125	296	528	1022
	1000	13	30	62	118	281	501	972
	1100	12	28	59	113	269	478	930
	1200	12	27	57	108	258	458	892
	1300	11	26	55	104	249	441	859
	1400	11	25	53	101	240	425	830
	1500	10	24	51	97	233	411	803

Table includes losses for four 90 degree bends and 2 end fittings. To compute flow capacity for tubing runs with a larger number of bends and/or fittings, add the appropriate number of feet to the actual run length using the following formula:
L = 1.3 (n) L = Numbers of feet to be added to actual run length. n = Number of bends and/or fittings over six.

Maximum Capacity of WARDFlex®/WARDFlex®MAX CSST in Cubic Feet per Hour (CFH) of Natural Gas (Approximately 1000 BTU per cubic foot)

Table A-9

Gas Pressure of: 0.5 psi or Less
Pressure Drop of: 6.0 inches W.C.

(based on a 0.60 specific gravity gas)

Tubing Length (Ft.)	Size	10A	15A	20A	25A	32A	38A	50A
		3/8"	1/2"	3/4"	1"	1-1/4"	1-1/2"	2"
	EHD	15	19	25	31	39	48	62
	5	229	479	911	1687	3694	7294	12991
	10	160	336	649	1182	2668	5199	9293
	15	130	273	532	964	2205	4265	7676
	20	112	236	462	840	1926	3705	6703
	25	99	211	414	755	1735	3323	6033
	30	90	192	379	692	1592	3040	5536
	40	78	166	329	603	1391	2641	4834
	50	69	148	295	542	1253	2368	4352
	60	63	135	270	497	1150	2167	3993
	70	58	126	250	462	1070	2009	3713
	80	54	118	234	433	1005	1898	3487
	90	51	111	221	409	951	1811	3298
	100	48	106	210	389	905	1736	3139
	125	43	95	188	350	821	1588	2825
	150	39	87	172	321	763	1476	2592
	200	34	75	149	279	680	1316	2264
	250	30	68	134	251	622	1203	2038
	300	27	62	122	230	578	1119	1870
	400	23	54	106	200	515	997	1633
	500	21	48	95	180	471	912	1470
	600	19	44	87	165	438	848	1348
	700	17	41	81	154	412	797	1254
	800	16	38	76	144	390	755	1177
	900	15	36	71	137	372	721	1114
	1000	14	34	68	130	357	691	1060
	1100	14	33	65	124	344	665	1013
	1200	13	31	62	119	332	642	972
	1300	12	30	60	115	321	622	936
	1400	12	29	57	111	312	604	904
	1500	12	28	56	108	304	587	875

Table includes losses for four 90 degree bends and 2 end fittings. To compute flow capacity for tubing runs with a larger number of bends and/or fittings, add the appropriate number of feet to the actual run length using the following formula:
L = 1.3 (n) L = Numbers of feet to be added to actual run length. n = Number of bends and/or fittings over six.

7.2 NATURAL GAS - ELEVATED PRESSURE

Maximum Capacity of WARDFlex®/WARDFlex®MAX CSST in Cubic Feet per Hour (CFH) of Natural Gas (Approximately 1000 BTU per cubic foot)

Table A-10

Gas Pressure of: 1.0 psi
Pressure Drop of: 13.0 inches W.C.
(based on a 0.60 specific gravity gas)

Tubing Length (Ft.)	10A	15A	20A	25A	32A	38A	50A
Size	**3/8"**	**1/2"**	**3/4"**	**1"**	**1-1/4"**	**1-1/2"**	**2"**
EHD	**15**	**19**	**25**	**31**	**39**	**48**	**62**
5	342	710	1329	2507	5310	10640	18923
10	239	499	947	1757	3835	7584	13507
15	193	405	776	1427	3170	6222	11089
20	167	350	675	1231	2770	5406	9650
25	148	313	605	1098	2494	4848	8687
30	135	285	553	1001	2290	4435	7971
40	116	246	480	873	2000	3853	6960
50	104	219	431	785	1801	3455	6265
60	94	200	394	719	1653	3161	5749
70	87	185	365	668	1538	2932	5346
80	81	173	342	627	1444	2746	5020
90	76	163	323	592	1367	2593	4749
100	72	154	307	563	1301	2463	4519
125	64	137	275	506	1171	2208	4068
150	59	125	251	464	1075	2020	3733
200	50	108	218	404	939	1755	3259
250	45	97	196	363	846	1574	2934
300	41	88	179	333	776	1440	2692
400	35	76	155	290	678	1251	2351
500	31	68	139	261	611	1122	2116
600	28	62	127	239	561	1026	1942
700	26	58	118	222	521	952	1806
800	24	54	111	208	490	892	1695
900	23	51	104	197	463	842	1604
1000	22	48	99	187	441	799	1526
1100	21	46	95	179	422	763	1459
1200	20	44	91	172	405	731	1400
1300	19	42	87	165	390	703	1348
1400	18	41	84	159	376	678	1302
1500	17	39	81	154	364	656	1260

Table A-11

Gas Pressure of: 2.0 psi
Pressure Drop of: 1.0 psi
(based on a 0.60 specific gravity gas)

Tubing Length (Ft.)	10A	15A	20A	25A	32A	38A	50A
Size	**3/8"**	**1/2"**	**3/4"**	**1"**	**1-1/4"**	**1-1/2"**	**2"**
EHD	**15**	**19**	**25**	**31**	**39**	**48**	**62**
5	505	1044	1926	3698	7578	15405	27356
10	353	733	1372	2592	5473	10981	19526
15	286	596	1125	2105	4524	9008	16030
20	247	515	977	1816	3953	7827	13937
25	220	460	876	1620	3560	7019	12503
30	200	419	801	1475	3268	6421	11442
40	172	362	696	1273	2855	5579	9948
50	154	323	624	1135	2571	5003	8954
60	140	294	571	1034	2360	4576	8217
70	129	272	529	959	2195	4244	7641
80	120	254	496	900	2062	3976	7175
90	113	239	468	851	1951	3754	6787
100	107	227	445	809	1857	3566	6459
125	95	202	398	727	1672	3198	5814
150	87	184	364	666	1535	2925	5335
200	75	159	317	581	1341	2542	4658
250	67	142	284	522	1207	2279	4193
300	61	129	260	478	1108	2085	3848
400	52	112	225	417	968	1811	3360
500	46	100	202	375	872	1624	3024
600	42	91	185	343	800	1486	2775
700	39	84	171	319	744	1378	2581
800	36	79	160	299	699	1291	2423
900	34	74	151	283	661	1219	2292
1000	32	70	144	269	630	1158	2181
1100	31	67	137	257	602	1105	2085
1200	29	64	131	247	578	1059	2002
1300	28	62	126	237	557	1018	1927
1400	27	60	122	229	537	982	1861
1500	26	58	118	222	520	950	1802

Table includes losses for four 90 degree bends and 2 end fittings. To compute flow capacity for tubing runs with a larger number of bends and/or fittings, add the appropriate number of feet to the actual run length using the following formula:
L = 1.3 (n) L = Numbers of feet to be added to actual run length. n = Number of bends and/or fittings over six.

Maximum Capacity of WARDFlex®/WARDFlex®MAX CSST in Cubic Feet per Hour (CFH) of Natural Gas (Approximately 1000 BTU per cubic foot)

Table A-12

Gas Pressure of: 2.0 psi
Pressure Drop of: 1.5 psi
(based on a 0.60 specific gravity gas)

Tubing Length (Ft.)	Size	10A	15A	20A	25A	32A	38A	50A
		3/8"	1/2"	3/4"	1"	1-1/4"	1-1/2"	2"
	EHD	15	19	25	31	39	48	62
	5	623	1283	2348	4553	9172	18779	33322
	10	435	902	1673	3191	6621	13386	23784
	15	353	733	1372	2592	5473	10981	19526
	20	304	633	1192	2236	4782	9541	16976
	25	271	565	1068	1994	4306	8556	15229
	30	247	515	977	1816	3953	7827	13937
	40	213	445	849	1567	3453	6801	12117
	50	189	397	761	1398	3110	6098	10870
	60	172	362	696	1273	2855	5579	9948
	70	159	335	646	1176	2655	5174	9250
	80	148	313	605	1098	2494	4847	8686
	90	140	294	571	1034	2360	4576	8217
	100	132	279	542	982	2246	4347	7819
	125	118	249	486	883	2023	3898	7038
	150	107	228	445	809	1857	3585	6459
	200	92	199	386	705	1644	3156	5639
	250	82	179	346	634	1502	2859	5076
	300	75	165	317	581	1395	2637	4658
	400	64	144	275	506	1241	2322	4067
	500	57	129	246	455	1133	2103	3661
	600	52	119	225	417	1052	1940	3360
	700	48	110	209	387	989	1812	3124
	800	45	104	196	363	936	1708	2935
	900	42	98	185	343	893	1621	2779
	1000	40	93	175	327	855	1547	2647
	1100	38	89	167	312	823	1483	2532
	1200	36	86	160	299	794	1427	2432
	1300	35	82	154	288	769	1377	2344
	1400	33	80	149	278	746	1333	2265
	1500	32	77	144	269	725	1292	2194

Table A-13

Gas Pressure of: 5.0 psi
Pressure Drop of: 3.5 psi
(based on a 0.60 specific gravity gas)

Tubing Length (Ft.)	Size	10A	15A	20A	25A	32A	38A	50A
		3/8"	1/2"	3/4"	1"	1-1/4"	1-1/2"	2"
	EHD	15	19	25	31	39	48	62
	5	965	1975	3554	7030	13794	28406	50320
	10	675	1388	2532	4927	9879	20248	35917
	15	547	1129	2076	4002	8147	16610	29487
	20	472	975	1804	3453	7118	14432	25636
	25	420	870	1617	3080	6410	12942	22999
	30	382	793	1479	2805	5884	11839	21046
	40	330	685	1285	2420	5201	10287	18298
	50	294	611	1152	2158	4728	9225	16426
	60	267	557	1054	1966	4374	8439	15199
	70	247	515	977	1816	4095	7872	14233
	80	230	481	915	1696	3868	7449	13446
	90	217	453	864	1597	3679	7094	12787
	100	205	430	821	1517	3517	6791	12226
	125	183	383	736	1360	3197	6192	11117
	150	166	349	673	1244	2958	5742	10287
	200	143	303	585	1080	2616	5097	9100
	250	128	272	528	969	2378	4647	8275
	300	116	249	486	886	2200	4309	7656
	400	100	216	426	770	1945	3825	6773
	500	89	194	385	690	1769	3488	6159
	600	81	178	354	631	1636	3234	5699
	700	75	165	330	585	1532	3034	5337
	800	70	154	311	548	1447	2871	5041
	900	66	146	295	518	1376	2734	4795
	1000	62	139	281	492	1315	2618	4584
	1100	59	132	269	469	1263	2516	4402
	1200	56	127	259	450	1217	2427	4242
	1300	54	122	249	432	1176	2348	4099
	1400	52	118	241	417	1139	2277	3972
	1500	50	114	234	403	1106	2213	3857

Table includes losses for four 90 degree bends and 2 end fittings. To compute flow capacity for tubing runs with a larger number of bends and/or fittings, add the appropriate number of feet to the actual run length using the following formula:
L = 1.3 (n) L = Numbers of feet to be added to actual run length. n = Number of bends and/or fittings over six.

Maximum Capacity of WARDFlex®/WARDFlex®MAX CSST in Cubic Feet per Hour (CFH) of Natural Gas (Approximately 1000 BTU per cubic foot)

Table A-14

Gas Pressure of: 10.0 psi
Pressure Drop of: 7.0 psi
(based on a 0.60 specific gravity gas)

Tubing Length (Ft.)	Size	10A	15A	20A	25A	32A	38A	50A
		3/8"	1/2"	3/4"	1"	1-1/4"	1-1/2"	2"
	EHD	15	19	25	31	39	48	62
	5		2891	4842	10050	19789	38067	59564
	10		2047	3552	7165	14648	28295	45392
	15		1672	2963	5879	12284	23787	38721
	20		1449	2606	5109	10842	21031	34592
	25		1297	2358	4582	9842	19115	31695
	30		1184	2174	4192	9093	17681	29508
	40		1026	1911	3643	8026	15632	26361
	50		918	1730	3267	7285	14208	24153
	60		838	1594	2989	6730	13142	22487
	70		776	1488	2772	6295	12303	21169
	80		726	1402	2597	5940	11619	20089
	90		685	1330	2452	5644	11048	19183
	100		650	1269	2329	5392	10561	18407
	125		581	1148	2089	4894	9599	16865
	150		531	1058	1911	4522	8878	15702
	200		460	931	1660	3991	7850	14027
	250		412	842	1489	3623	7135	12852
	300		376	776	1362	3347	6599	11966
	400		326	683	1184	2954	5834	10690
	500		291	618	1062	2681	5303	9794
	600		266	569	971	2477	4905	9119
	700		246	531	901	2317	4592	8584
	800		230	501	844	2187	4337	8146
	900		217	475	797	2078	4123	7778
	1000		206	453	757	1985	3941	7464
	1100		197	434	722	1904	3784	7190
	1200		188	417	692	1834	3646	6949
	1300		181	403	666	1771	3523	6734
	1400		174	390	642	1715	3413	6541
	1500		168	378	621	1664	3313	6367

Table A-15

Gas Pressure of: 25.0 psi
Pressure Drop of: 10.0 psi
(based on a 0.60 specific gravity gas)

Tubing Length (Ft.)	Size	10A	15A	20A	25A	32A	38A	50A
		3/8"	1/2"	3/4"	1"	1-1/4"	1-1/2"	2"
	EHD	15	19	25	31	39	48	62
	5		4686	9174	15713	31976	43967	74301
	10		3290	6154	11195	23456	34615	58742
	15		2676	4872	9182	19568	30096	51198
	20		2310	4128	7977	17207	27253	46440
	25		2062	3630	7152	15573	25233	43057
	30		1879	3268	6542	14354	23695	40476
	40		1622	2769	5683	12622	21456	36715
	50		1448	2435	5096	11424	19866	34040
	60		1319	2192	4661	10530	18655	32000
	70		1219	2006	4323	9828	17689	30371
	80		1139	1857	4049	9259	16893	29026
	90		1073	1736	3823	8784	16220	27890
	100		1016	1633	3631	8380	15641	26912
	125		907	1436	3255	7584	14482	24951
	150		826	1293	2978	6991	13599	23456
	200		714	1096	2587	6147	12314	21276
	250		637	963	2319	5564	11402	19726
	300		580	867	2122	5128	10706	18544
	400		501	735	1843	4509	9695	16820
	500		447	646	1652	4081	8976	15595
	600		407	582	1511	3762	8429	14660
	700		376	532	1402	3511	7993	13914
	800		352	493	1313	3308	7633	13298
	900		331	460	1240	3138	7329	12777
	1000		314	433	1177	2994	7067	12329
	1100		299	410	1124	2869	6839	11937
	1200		286	390	1077	2759	6636	11590
	1300		274	372	1035	2662	6456	11280
	1400		264	357	999	2576	6293	11000
	1500		255	343	965	2497	6145	10746

Table includes losses for four 90 degree bends and 2 end fittings. To compute flow capacity for tubing runs with a larger number of bends and/or fittings, add the appropriate number of feet to the actual run length using the following formula:
L = 1.3 (n) L = Numbers of feet to be added to actual run length. n = Number of bends and/or fittings over six.

7.3 PROPANE GAS - LOW PRESSURE

Maximum Capacity of WARDFlex®/WARDFlex®MAX CSST in Thousands of BTU (KBTU) for Propane Gas (LPG)

Table A-16

Gas Pressure of: 0.5 psi or Less
Pressure Drop of: 0.5 inches W.C.

(based on a 1.52 specific gravity gas)

Tubing Length (Ft.)	Size	10A	15A	20A	25A	32A	38A	50A
		3/8"	1/2"	3/4"	1"	1-1/4"	1-1/2"	2"
	EHD	15	19	25	31	39	48	62
	5	100	245	426	785	1817	3425	6311
	10	70	164	303	564	1312	2440	4552
	15	57	131	248	464	1084	2002	3760
	20	49	110	216	404	948	1740	3283
	25	43	98	192	363	853	1560	2956
	30	40	88	177	335	784	1427	2712
	40	33	74	153	292	684	1239	2367
	50	30	66	137	263	616	1111	2130
	60	27	61	126	241	565	1016	1955
	70	25	56	116	226	526	943	1819
	80	24	52	109	211	494	883	1707
	90	22	49	102	200	467	834	1615
	100	21	47	98	191	444	791	1536
	125	19	42	90	172	399	714	1383
	150	16	37	83	158	368	662	1269
	200	14	33	74	139	320	588	1108
	250	13	30	67	124	289	535	997
	300	11	26	63	115	267	496	915
	400	9	23	56	99	233	441	799
	500	8	20	52	90	211	401	719
	600	8	18	49	82	194	373	660
	700	6	17	45	77	181	349	613
	800	6	15	42	72	170	330	576
	900	6	15	41	67	161	314	545
	1000	6	14	39	64	153	300	518
	1100	5	14	37	63	147	289	496
	1200	5	12	36	60	142	279	475
	1300	5	12	36	58	135	270	458
	1400	5	12	34	55	132	262	442
	1500	5	11	33	53	128	254	428

Table A-17

Gas Pressure of: 0.5 psi or Less
Pressure Drop of: 1.0 inches W.C.

(based on a 1.52 specific gravity gas)

Tubing Length (Ft.)	Size	10A	15A	20A	25A	32A	38A	50A
		3/8"	1/2"	3/4"	1"	1-1/4"	1-1/2"	2"
	EHD	15	19	25	31	39	48	62
	5	142	304	599	1094	2518	4805	8752
	10	100	213	427	786	1818	3425	6312
	15	81	173	350	647	1503	2810	5214
	20	70	150	304	564	1313	2441	4553
	25	62	134	272	507	1182	2189	4098
	30	57	122	249	465	1085	2003	3761
	40	49	106	216	405	948	1740	3284
	50	43	95	194	364	854	1560	2956
	60	40	87	177	334	784	1427	2712
	70	36	80	164	310	729	1324	2522
	80	33	75	154	291	685	1240	2368
	90	32	71	145	275	648	1171	2240
	100	30	67	138	261	616	1112	2132
	125	27	60	124	235	555	997	1919
	150	24	55	113	215	510	912	1761
	200	21	47	98	187	445	792	1538
	250	19	42	88	168	401	711	1384
	300	16	39	81	154	368	650	1270
	400	14	33	70	134	321	565	1109
	500	13	30	63	121	289	506	998
	600	11	27	58	111	266	463	916
	700	11	25	54	103	247	430	852
	800	9	24	50	96	232	402	800
	900	9	22	47	91	219	380	756
	1000	8	21	45	87	209	361	720
	1100	8	20	43	83	200	344	688
	1200	8	19	41	79	192	330	660
	1300	8	18	40	76	185	317	636
	1400	6	18	38	74	178	306	614
	1500	6	17	37	71	173	296	594

Table includes losses for four 90 degree bends and 2 end fittings. To compute flow capacity for tubing runs with a larger number of bends and/or fittings, add the appropriate number of feet to the actual run length using the following formula:
L = 1.3 (n) L = Numbers of feet to be added to actual run length. n = Number of bends and/or fittings over six.

Maximum Capacity of WARDFlex®/WARDFlex®MAX CSST in Thousands of BTU (KBTU) for Propane Gas (LPG)

Table A-18

Gas Pressure of: 0.5 psi or Less
Pressure Drop of: 2.0 inches W.C.

(based on a 1.52 specific gravity gas)

Tubing Length (Ft.)	Size	10A	15A	20A	25A	32A	38A	50A
		3/8"	1/2"	3/4"	1"	1-1/4"	1-1/2"	2"
	EHD	15	19	25	31	39	48	62
	5	205	432	841	1524	3486	6742	12134
	10	142	304	599	1094	2518	4805	8752
	15	115	247	491	901	2081	3942	7229
	20	100	213	427	786	1818	3425	6312
	25	89	190	382	706	1637	3071	5682
	30	81	173	350	647	1503	2810	5214
	40	70	150	304	564	1313	2441	4553
	50	62	134	272	507	1182	2189	4098
	60	57	122	249	465	1085	2003	3761
	70	52	113	231	432	1010	1857	3497
	80	49	106	216	405	948	1740	3284
	90	46	100	204	383	897	1643	3106
	100	43	95	194	364	854	1560	2956
	125	38	85	174	327	769	1399	2661
	150	35	77	159	300	706	1280	2442
	200	30	67	138	261	616	1112	2132
	250	27	60	124	235	555	997	1919
	300	24	55	113	215	510	912	1761
	400	21	47	98	187	445	792	1538
	500	19	42	88	168	401	711	1384
	600	16	39	81	154	368	650	1270
	700	16	36	75	143	342	603	1181
	800	14	33	70	134	321	565	1109
	900	13	31	66	127	304	533	1049
	1000	13	30	63	121	289	506	998
	1100	13	28	60	115	277	483	954
	1200	11	27	58	111	266	463	916
	1300	11	26	56	107	256	445	882
	1400	11	25	54	103	247	430	852
	1500	9	24	52	99	239	415	824

Table A-19

Gas Pressure of: 0.5 psi or Less
Pressure Drop of: 2.5 inches W.C.

(based on a 1.52 specific gravity gas)

Tubing Length (Ft.)	Size	10A	15A	20A	25A	32A	38A	50A
		3/8"	1/2"	3/4"	1"	1-1/4"	1-1/2"	2"
	EHD	15	19	25	31	39	48	62
	5	229	485	938	1702	3871	7518	13480
	10	161	340	668	1217	2796	5359	9723
	15	130	277	548	1003	2311	4396	8031
	20	112	239	476	874	2019	3819	7013
	25	100	213	427	786	1818	3425	6312
	30	90	194	390	720	1669	3133	5793
	40	77	168	339	628	1458	2722	5058
	50	70	150	304	564	1313	2441	4553
	60	63	137	278	517	1205	2233	4178
	70	58	127	258	480	1121	2071	3885
	80	54	119	241	451	1053	1940	3648
	90	51	112	228	426	996	1832	3451
	100	49	106	216	405	948	1740	3284
	125	43	95	194	364	854	1560	2956
	150	40	87	177	334	784	1427	2712
	200	33	75	154	291	685	1240	2368
	250	30	67	138	261	616	1112	2132
	300	27	61	126	239	566	1017	1956
	400	24	53	110	209	494	884	1708
	500	21	47	98	187	445	792	1538
	600	19	43	90	172	409	725	1411
	700	17	40	83	160	380	672	1312
	800	16	37	78	150	357	630	1232
	900	14	35	74	141	338	595	1165
	1000	14	33	70	134	321	565	1109
	1100	14	32	67	128	307	539	1060
	1200	13	30	64	123	295	517	1017
	1300	13	29	62	119	284	497	980
	1400	11	28	60	114	274	479	946
	1500	11	27	58	111	266	463	916

Table includes losses for four 90 degree bends and 2 end fittings. To compute flow capacity for tubing runs with a larger number of bends and/or fittings, add the appropriate number of feet to the actual run length using the following formula:
L = 1.3 (n) L = Numbers of feet to be added to actual run length. n = Number of bends and/or fittings over six.

Maximum Capacity of WARDFlex®/WARDFlex®MAX CSST in Thousands of BTU (KBTU) for Propane Gas (LPG)

Table A-20

Gas Pressure of: 0.5 psi or Less
Pressure Drop of: 3.0 inches W.C.
(based on a 1.52 specific gravity gas)

Tubing Length (Ft.)	Size	10A	15A	20A	25A	32A	38A	50A
		3/8"	1/2"	3/4"	1"	1-1/4"	1-1/2"	2"
	EHD	15	19	25	31	39	48	62
	5	253	531	1025	2187	4217	8218	14689
	10	177	373	730	1512	3044	5856	10595
	15	142	303	599	1218	2516	4805	8751
	20	123	262	520	1046	2198	4174	7641
	25	109	233	466	929	1980	3743	6879
	30	100	213	426	842	1817	3425	6311
	40	85	186	369	723	1588	2974	5512
	50	76	167	331	641	1430	2668	4961
	60	70	153	303	583	1312	2440	4552
	70	65	142	281	537	1220	2263	4233
	80	60	134	263	499	1146	2121	3975
	90	57	126	248	469	1090	2002	3760
	100	54	120	235	444	1043	1901	3578
	125	47	109	211	396	950	1705	3221
	150	43	99	192	363	880	1560	2956
	200	36	86	167	316	779	1354	2581
	250	33	79	150	284	709	1215	2323
	300	30	71	137	260	657	1111	2130
	400	25	63	120	227	583	972	1860
	500	22	56	107	203	531	877	1675
	600	21	52	98	186	491	806	1536
	700	19	47	90	173	459	750	1429
	800	17	45	85	162	434	705	1342
	900	16	42	80	153	414	668	1269
	1000	16	41	75	147	396	637	1207
	1100	14	39	72	140	380	608	1155
	1200	14	37	69	134	366	584	1108
	1300	14	36	67	129	354	564	1067
	1400	13	34	64	124	344	545	1030
	1500	13	33	63	120	333	527	997

Table A-21

Gas Pressure of: 0.5 psi or Less
Pressure Drop of: 6.0 inches W.C.
(based on a 1.52 specific gravity gas)

Tubing Length (Ft.)	Size	10A	15A	20A	25A	32A	38A	50A
		3/8"	1/2"	3/4"	1"	1-1/4"	1-1/2"	2"
	EHD	15	19	25	31	39	48	62
	5	362	757	1440	2666	5839	11530	20535
	10	253	531	1025	1868	4217	8218	14689
	15	205	431	840	1523	3485	6741	12133
	20	177	373	730	1327	3044	5856	10595
	25	156	333	654	1193	2742	5252	9536
	30	142	303	599	1093	2516	4805	8751
	40	123	262	520	953	2198	4174	7641
	50	109	233	466	856	1980	3743	6879
	60	100	213	426	785	1817	3425	6311
	70	92	199	395	730	1691	3175	5869
	80	85	186	369	684	1588	3000	5512
	90	81	175	349	646	1503	2862	5213
	100	76	167	331	614	1430	2744	4961
	125	68	150	297	553	1297	2510	4465
	150	62	137	271	507	1206	2333	4097
	200	54	118	235	441	1074	2080	3578
	250	47	107	211	396	983	1901	3221
	300	43	98	192	363	913	1768	2956
	400	36	85	167	316	814	1576	2581
	500	33	75	150	284	744	1441	2323
	600	30	69	137	260	692	1340	2130
	700	27	64	128	243	651	1259	1982
	800	25	60	120	227	616	1193	1860
	900	24	56	112	216	588	1139	1760
	1000	22	53	107	205	564	1092	1675
	1100	22	52	102	196	543	1051	1601
	1200	21	49	98	188	524	1014	1536
	1300	19	47	94	181	507	983	1479
	1400	19	45	90	175	493	954	1429
	1500	19	44	88	170	480	927	1383

Table includes losses for four 90 degree bends and 2 end fittings. To compute flow capacity for tubing runs with a larger number of bends and/or fittings, add the appropriate number of feet to the actual run length using the following formula:
L = 1.3 (n) L = Numbers of feet to be added to actual run length. n = Number of bends and/or fittings over six.

7.4 PROPANE GAS - ELEVATED PRESSURE

Maximum Capacity of WARDFlex®/WARDFlex®MAX CSST in Thousands of BTU (KBTU) for Propane Gas (LPG)

Table A-22

Gas Pressure of: 2.0 psi
Pressure Drop of: 1.0 psi
(based on a 1.52 specific gravity gas)

Tubing Length (Ft.)	Size	10A	15A	20A	25A	32A	38A	50A
		3/8"	1/2"	3/4"	1"	1-1/4"	1-1/2"	2"
	EHD	15	19	25	31	39	48	62
	5	798	1650	3044	5846	11980	24352	43244
	10	558	1159	2169	4097	8652	17358	30866
	15	452	943	1779	3328	7152	14239	25340
	20	390	815	1545	2871	6249	12373	22031
	25	348	727	1385	2561	5627	11095	19764
	30	316	663	1267	2332	5166	10150	18087
	40	272	572	1101	2012	4513	8819	15725
	50	243	511	987	1795	4064	7908	14155
	60	221	466	903	1634	3731	7234	12989
	70	204	430	837	1517	3470	6710	12079
	80	190	402	784	1423	3259	6286	11342
	90	179	379	740	1345	3084	5935	10729
	100	169	359	703	1279	2935	5637	10210
	125	150	320	630	1150	2643	5055	9190
	150	138	292	576	1054	2426	4624	8433
	200	119	252	501	918	2120	4018	7364
	250	106	225	449	826	1909	3603	6629
	300	96	205	411	757	1752	3296	6083
	400	82	177	357	659	1531	2864	5311
	500	73	158	320	593	1378	2568	4781
	600	66	144	292	543	1265	2349	4387
	700	62	133	271	505	1177	2179	4080
	800	57	125	254	473	1105	2041	3831
	900	54	118	240	448	1046	1927	3624
	1000	51	112	228	426	995	1830	3448
	1100	49	106	217	407	952	1747	3297
	1200	46	102	208	390	914	1674	3164
	1300	44	98	200	375	880	1610	3047
	1400	43	94	193	362	850	1553	2942
	1500	41	91	187	351	823	1501	2848

Table A-23

Gas Pressure of: 5.0 psi
Pressure Drop of: 3.5 psi
(based on a 1.52 specific gravity gas)

Tubing Length (Ft.)	Size	10A	15A	20A	25A	32A	38A	50A
		3/8"	1/2"	3/4"	1"	1-1/4"	1-1/2"	2"
	EHD	15	19	25	31	39	48	62
	5	1525	3121	5618	11112	21804	44902	79543
	10	1067	2194	4002	7788	15616	32007	56775
	15	865	1784	3281	6326	12878	26256	46611
	20	746	1541	2851	5458	11251	22813	40524
	25	664	1375	2556	4868	10132	20458	36355
	30	604	1253	2337	4434	9301	18714	33268
	40	522	1082	2031	3825	8221	16261	28924
	50	465	965	1821	3411	7473	14582	25965
	60	422	880	1666	3107	6914	13339	24025
	70	390	814	1544	2870	6473	12443	22498
	80	364	760	1446	2680	6114	11775	21254
	90	343	716	1365	2524	5815	11213	20213
	100	324	679	1297	2398	5559	10734	19326
	125	289	605	1163	2149	5053	9788	17573
	150	262	551	1063	1966	4675	9076	16261
	200	226	478	924	1707	4135	8057	14384
	250	202	429	834	1531	3759	7345	13080
	300	183	393	768	1400	3477	6811	12102
	400	158	341	673	1217	3074	6046	10706
	500	141	306	608	1090	2796	5513	9735
	600	128	281	559	997	2586	5112	9008
	700	119	260	521	924	2421	4796	8436
	800	111	243	491	866	2287	4538	7968
	900	104	230	466	818	2175	4321	7579
	1000	98	219	444	777	2078	4138	7246
	1100	93	208	425	741	1996	3977	6958
	1200	89	200	409	711	1923	3836	6705
	1300	85	192	393	682	1858	3711	6479
	1400	82	186	380	659	1800	3599	6278
	1500	79	180	369	637	1748	3498	6096

Table includes losses for four 90 degree bends and 2 end fittings. To compute flow capacity for tubing runs with a larger number of bends and/or fittings, add the appropriate number of feet to the actual run length using the following formula:
L = 1.3 (n) L = Numbers of feet to be added to actual run length. n = Number of bends and/or fittings over six.

Maximum Capacity of WARDFlex®/WARDFlex®MAX CSST in Thousands of BTU (KBTU) for Propane Gas (LPG)

Table A-24

Gas Pressure of: 10.0 psi
Pressure Drop of: 7.0 psi

(based on a 1.52 specific gravity gas)

Tubing Length (Ft.)	Size	10A	15A	20A	25A	32A	38A	50A
		3/8"	1/2"	3/4"	1"	1-1/4"	1-1/2"	2"
	EHD	15	19	25	31	39	48	62
	5		4569	7655	15886	31282	60175	94157
	10		3235	5615	11327	23155	44728	71754
	15		2644	4684	9293	19419	37602	61209
	20		2291	4119	8076	17140	33245	54682
	25		2050	3728	7243	15558	30217	50102
	30		1872	3436	6626	14374	27949	46646
	40		1622	3021	5758	12687	24711	41671
	50		1451	2735	5164	11516	22460	38181
	60		1325	2521	4724	10640	20774	35547
	70		1227	2353	4382	9951	19448	33463
	80		1148	2216	4106	9391	18367	31756
	90		1083	2103	3876	8923	17464	30324
	100		1028	2006	3682	8524	16694	29097
	125		919	1815	3302	7737	15174	26660
	150		840	1673	3021	7148	14035	24821
	200		727	1471	2625	6309	12409	22174
	250		651	1332	2354	5727	11278	20316
	300		594	1227	2154	5291	10432	18915
	400		515	1079	1872	4670	9223	16898
	500		461	977	1678	4239	8383	15482
	600		421	900	1536	3916	7754	14414
	700		390	840	1424	3663	7259	13569
	800		364	792	1334	3457	6855	12877
	900		344	751	1260	3284	6518	12296
	1000		326	716	1197	3138	6231	11799
	1100		311	686	1142	3010	5982	11366
	1200		298	660	1095	2899	5763	10985
	1300		286	637	1053	2800	5569	10645
	1400		276	616	1015	2711	5395	10341
	1500		266	597	982	2631	5238	10065

Table A-25

Gas Pressure of: 25.0 psi
Pressure Drop of: 10.0 psi

(based on a 1.52 specific gravity gas)

Tubing Length (Ft.)	Size	10A	15A	20A	25A	32A	38A	50A
		3/8"	1/2"	3/4"	1"	1-1/4"	1-1/2"	2"
	EHD	15	19	25	31	39	48	62
	5		7407	14503	24838	50546	69501	117452
	10		5202	9729	17697	37079	54719	92856
	15		4230	7702	14514	30932	47575	80931
	20		3652	6526	12610	27200	43080	73411
	25		3260	5739	11306	24618	39888	68063
	30		2970	5167	10342	22691	37456	63983
	40		2565	4378	8984	19953	33917	58038
	50		2289	3850	8056	18058	31404	53809
	60		2086	3466	7368	16645	29490	50584
	70		1928	3171	6833	15537	27962	48009
	80		1801	2936	6401	14636	26703	45884
	90		1696	2744	6043	13886	25640	44088
	100		1607	2582	5740	13247	24725	42541
	125		1434	2271	5146	11989	22893	39442
	150		1307	2044	4707	11051	21497	37078
	200		1128	1732	4089	9717	19466	33632
	250		1007	1523	3667	8795	18023	31182
	300		917	1371	3354	8106	16925	29313
	400		792	1162	2914	7128	15325	26589
	500		707	1022	2612	6451	14190	24652
	600		644	920	2390	5947	13325	23175
	700		595	841	2216	5551	12635	21995
	800		556	779	2076	5229	12066	21021
	900		524	728	1960	4961	11585	20198
	1000		496	685	1861	4732	11172	19490
	1100		473	648	1776	4535	10810	18870
	1200		452	617	1702	4362	10491	18321
	1300		434	589	1637	4209	10205	17831
	1400		418	564	1579	4072	9947	17389
	1500		403	542	1526	3948	9713	16987

Table includes losses for four 90 degree bends and 2 end fittings. To compute flow capacity for tubing runs with a larger number of bends and/or fittings, add the appropriate number of feet to the actual run length using the following formula:
L = 1.3 (n) L = Numbers of feet to be added to actual run length. n = Number of bends and/or fittings over six.

7.5 STEEL PIPE CAPACITIES

Maximum Capacity of steel pipe in Cubic Feet per Hour (CFH) of Natural Gas
(Approximately 1000 BTU per cubic foot)

Table A-26

Gas Pressure of: 0.5 psi or Less
Pressure Drop of: 0.5 inches W.C.

(based on a 0.60 specific gravity gas)

Tubing Length (Ft.) / Size	1/2	3/4	1	1-1/4	1-1/2	2	2-1/2	3	3-1/2	4
10	173	361	682	1,401	2,099	4,045	6,449	11,406	16,704	23,275
20	118	248	468	963	1,443	2,781	4,433	7,841	11,483	16,000
30	95	199	376	773	1,159	2,233	3,561	6,297	9,222	12,850
40	81	171	322	662	992	1,911	3,048	5,390	7,894	10,999
50	72	151	285	586	879	1,694	2,701	4,777	6,997	9,749
60	65	137	258	531	796	1,535	2,448	4,329	6,340	8,834
70	60	126	238	489	733	1,412	2,252	3,983	5,833	8,127
80	56	117	221	455	682	1,314	2,095	3,705	5,426	7,561
90	52	110	207	427	640	1,233	1,966	3,476	5,092	7,095
100	49	104	196	403	604	1,164	1,857	3,284	4,810	6,702
125	44	92	174	357	535	1,032	1,646	2,911	4,263	5,940
150	40	83	157	324	485	935	1,491	2,637	3,863	5,382
175	36	77	145	298	446	860	1,372	2,426	3,554	4,952
200	34	71	135	277	415	800	1,276	2,257	3,306	4,607

Maximum Capacity of steel pipe in Thousands of BTU (KBTU) of Propane Gas (LPG
(Approximately 2500 BTU per cubic foot)

Table A-27

Gas Pressure of: 0.5 psi or Less
Pressure Drop of: 1.0 inches W.C.

(based on a 1.52 specific gravity gas)

Tubing Length (Ft.) / Size	1/2	3/4	1	1-1/4	1-1/2	2	1-1/2	3	3-1/2	4
5	618	1,295	2,440	5,012	7,512	14,477	23,082	40,821	59,782	83,300
10	423	889	1,676	3,446	5,164	9,953	15,866	28,062	41,097	57,265
15	341	715	1,347	2,766	4,148	7,993	12,744	22,537	33,007	45,990
20	291	610	1,153	2,368	3,551	6,840	10,909	19,290	28,252	39,364
25	259	540	1,021	2,099	3,147	6,063	9,669	17,099	25,039	34,892
30	234	491	926	1,902	2,851	5,493	8,760	15,493	22,689	31,616
40	199	421	792	1,628	2,440	4,704	7,497	13,262	19,422	27,061
50	177	371	702	1,442	2,164	4,168	6,646	11,753	17,213	23,986
60	159	336	635	1,307	1,960	3,777	6,021	10,650	15,597	21,733
70	147	309	585	1,203	1,803	3,474	5,540	9,798	14,350	19,995
80	137	289	543	1,118	1,678	3,232	5,154	9,116	13,351	18,603
90	129	271	510	1,048	1,574	3,033	4,836	8,553	12,527	17,455
100	122	254	483	991	1,487	2,866	4,569	8,080	11,832	16,489
125	107	227	428	879	1,317	2,540	4,049	7,161	10,488	14,614

Tables include losses for four 90 bends and two end fittings.
To compute flow capacity for tubing runs with a larger number of bends and/or fittings, add the appropriate number of feet to the actual ru

7.6 PRESSURE DROP PER FOOT TABLES

WARDFlex®/WARDFlex®MAX Pressure Drop per Foot

TABLE A-28

Pressure drop in inches of water column per foot ("WC per foot) at given CFH Flow based on natural gas specific gravity of 0.60

Natural Gas Flow in CFH	10A 3/8"	15A 1/2"	20A 3/4"	25A 1"	32A 1-1/4"	38A 1-1/2"	50A 2"
EHD	15	19	25	31	39	48	62
10	0.003	0.001	0.000	0.000	0.000	0.000	0.000
20	0.011	0.002	0.000	0.000	0.000	0.000	0.000
30	0.023	0.005	0.001	0.000	0.000	0.000	0.000
40	0.041	0.009	0.002	0.001	0.000	0.000	0.000
50	0.063	0.014	0.003	0.001	0.000	0.000	0.000
60	0.089	0.020	0.005	0.001	0.000	0.000	0.000
70	0.120	0.027	0.006	0.002	0.000	0.000	0.000
80	0.156	0.035	0.008	0.002	0.000	0.000	0.000
90	0.196	0.045	0.011	0.003	0.000	0.000	0.000
100	0.240	0.055	0.013	0.003	0.001	0.000	0.000
110	0.289	0.067	0.016	0.004	0.001	0.000	0.000
120	0.342	0.079	0.019	0.005	0.001	0.000	0.000
130	0.399	0.092	0.022	0.006	0.001	0.000	0.000
140	0.461	0.107	0.026	0.007	0.001	0.000	0.000
150	0.527	0.123	0.030	0.008	0.001	0.000	0.000
160	0.597	0.139	0.034	0.009	0.001	0.000	0.000
170	0.671	0.157	0.039	0.011	0.002	0.001	0.000
180	0.750	0.175	0.044	0.012	0.002	0.001	0.000
190	0.833	0.195	0.049	0.013	0.002	0.001	0.000
200	0.920	0.216	0.054	0.015	0.002	0.001	0.000
225	1.155	0.272	0.069	0.019	0.003	0.001	0.000
250	1.417	0.334	0.085	0.024	0.004	0.001	0.000
275	1.704	0.403	0.104	0.029	0.005	0.001	0.000
300	2.017	0.478	0.124	0.035	0.006	0.002	0.000
325	2.355	0.560	0.146	0.041	0.007	0.002	0.000
350	2.719	0.647	0.170	0.048	0.008	0.002	0.001
375	3.107	0.741	0.195	0.055	0.009	0.003	0.001
400	3.521	0.842	0.223	0.063	0.011	0.003	0.001
425	3.960	0.948	0.252	0.072	0.012	0.004	0.001
450	4.423	1.061	0.284	0.081	0.014	0.004	0.001
475	4.911	1.180	0.317	0.091	0.015	0.004	0.001
500	5.424	1.305	0.352	0.101	0.017	0.005	0.001
525	5.962	1.436	0.389	0.112	0.019	0.005	0.001
550	6.524	1.574	0.428	0.123	0.021	0.006	0.001
575	7.110	1.717	0.468	0.135	0.023	0.007	0.002
600	7.721	1.867	0.511	0.148	0.025	0.007	0.002
625	8.356	2.023	0.555	0.161	0.027	0.008	0.002
650	9.015	2.185	0.602	0.175	0.030	0.008	0.002
675	9.699	2.353	0.650	0.190	0.032	0.009	0.002
700	10.407	2.528	0.700	0.205	0.035	0.010	0.002
725	11.139	2.708	0.752	0.220	0.037	0.011	0.003
750	11.894	2.894	0.806	0.236	0.040	0.011	0.003
775	12.674	3.087	0.862	0.253	0.043	0.012	0.003
800	13.478	3.286	0.920	0.271	0.046	0.013	0.003
825	14.306	3.491	0.980	0.289	0.049	0.014	0.004

Natural Gas Flow in CFH	10A 3/8"	15A 1/2"	20A 3/4"	25A 1"	32A 1-1/4"	38A 1-1/2"	50A 2"
EHD	15	19	25	31	39	48	62
850	15.157	3.701	1.041	0.307	0.052	0.015	0.004
875	16.032	3.918	1.105	0.326	0.056	0.016	0.004
900	16.931	4.141	1.170	0.346	0.059	0.017	0.004
925	17.854	4.370	1.238	0.367	0.063	0.018	0.004
950	18.800	4.606	1.307	0.388	0.067	0.018	0.005
975	19.770	4.847	1.379	0.409	0.070	0.019	0.005
1000	20.763	5.094	1.452	0.432	0.074	0.021	0.005
1050	22.821	5.606	1.604	0.476	0.082	0.023	0.006
1100	24.972	6.143	1.764	0.521	0.091	0.025	0.006
1150	27.217	6.704	1.932	0.568	0.100	0.027	0.007
1200	29.556	7.288	2.108	0.618	0.109	0.030	0.008
1250	31.987	7.897	2.291	0.669	0.119	0.032	0.009
1300	34.511	8.530	2.483	0.722	0.130	0.035	0.009
1350	37.128	9.186	2.682	0.777	0.141	0.038	0.010
1400	39.837	9.867	2.889	0.834	0.152	0.041	0.011
1450	42.638	10.571	3.104	0.893	0.164	0.044	0.012
1500	45.532	11.299	3.326	0.954	0.176	0.047	0.013
1550	48.517	12.051	3.557	1.017	0.189	0.050	0.013
1600	51.593	12.827	3.796	1.082	0.202	0.054	0.014
1650	54.761	13.626	4.042	1.149	0.216	0.057	0.015
1700	58.020	14.449	4.296	1.218	0.230	0.061	0.016
1750	61.371	15.296	4.559	1.289	0.244	0.065	0.017
1800	64.812	16.167	4.829	1.362	0.259	0.068	0.018
1850	68.344	17.061	5.107	1.436	0.275	0.072	0.020
1900	71.966	17.979	5.394	1.513	0.291	0.076	0.021
1950	75.679	18.920	5.688	1.592	0.308	0.081	0.022
2000	79.482	19.885	5.990	1.672	0.325	0.085	0.023
2050	83.375	20.874	6.300	1.755	0.342	0.089	0.024
2100	87.358	21.886	6.618	1.839	0.360	0.094	0.026
2150	91.431	22.922	6.945	1.926	0.379	0.098	0.027
2200	95.593	23.981	7.279	2.014	0.398	0.103	0.028
2250	99.846	25.063	7.621	2.104	0.417	0.108	0.030
2300		26.170	7.971	2.196	0.437	0.113	0.031
2350		27.299	8.330	2.290	0.458	0.118	0.032
2400		28.452	8.696	2.386	0.479	0.123	0.034
2450		29.628	9.071	2.484	0.500	0.129	0.035
2500		30.828	9.453	2.584	0.522	0.134	0.037
2550		32.051	9.844	2.686	0.545	0.140	0.039
2600		33.298	10.242	2.789	0.568	0.145	0.040
2650		34.568	10.649	2.895	0.591	0.151	0.042
2700		35.861	11.064	3.002	0.615	0.157	0.044
2750		37.177	11.487	3.112	0.640	0.163	0.045
2800		38.517	11.918	3.223	0.665	0.169	0.047
2850		39.880	12.357	3.336	0.691	0.175	0.049

TABLE A-28

Pressure drop in inches of water column per foot ("WC per foot) at given CFH Flow based on natural gas specific gravity of 0.60

Natural Gas Flow in CFH	10A 3/8"	15A 1/2"	20A 3/4"	25A 1"	32A 1-1/4"	38A 1-1/2"	50A 2"
EHD	15	19	25	31	39	48	62
2900		41.267	12.805	3.451	0.717	0.182	0.051
2950		42.676	13.260	3.568	0.743	0.188	0.053
3000		44.109	13.724	3.687	0.770	0.195	0.055
3050		45.565	14.195	3.808	0.798	0.201	0.056
3100		47.044	14.675	3.931	0.826	0.208	0.058
3150		48.547	15.163	4.055	0.855	0.215	0.060
3200		50.073	15.660	4.182	0.884	0.222	0.062
3250		51.621	16.164	4.310	0.913	0.229	0.065
3300		53.193	16.677	4.440	0.944	0.237	0.067
3350		54.789	17.197	4.573	0.974	0.244	0.069
3400		56.407	17.726	4.707	1.006	0.251	0.071
3450		58.048	18.263	4.842	1.037	0.259	0.073
3500		59.713	18.809	4.980	1.070	0.267	0.076
3550		61.401	19.362	5.120	1.102	0.275	0.078
3600		63.111	19.924	5.262	1.136	0.283	0.080
3650		64.845	20.494	5.405	1.170	0.291	0.083
3700		66.602	21.072	5.550	1.204	0.299	0.085
3750		68.382	21.658	5.698	1.239	0.307	0.087
3800		70.185	22.253	5.847	1.274	0.316	0.090
3850		72.011	22.855	5.998	1.310	0.324	0.093
3900		73.860	23.466	6.150	1.347	0.333	0.095
3950		75.732	24.086	6.305	1.384	0.342	0.098
4000		77.627	24.713	6.462	1.422	0.351	0.100
4050		79.545	25.349	6.620	1.460	0.360	0.103
4100		81.486	25.993	6.780	1.498	0.369	0.106
4150		83.450	26.645	6.943	1.538	0.378	0.108
4200		85.437	27.306	7.107	1.577	0.388	0.111
4250		87.447	27.975	7.273	1.618	0.397	0.114
4300		89.480	28.652	7.440	1.658	0.407	0.117
4350		91.536	29.337	7.610	1.700	0.416	0.120
4400		93.615	30.031	7.782	1.742	0.426	0.123
4450		95.717	30.732	7.955	1.784	0.436	0.126
4500		97.841	31.443	8.130	1.827	0.446	0.129
4550		99.989	32.161	8.307	1.870	0.457	0.132
4600			32.888	8.486	1.915	0.467	0.135
4650			33.623	8.667	1.959	0.477	0.138
4700			34.366	8.850	2.004	0.488	0.141
4750			35.118	9.034	2.050	0.499	0.144
4800			35.878	9.221	2.096	0.509	0.148
4850			36.646	9.409	2.143	0.520	0.151
4900			37.423	9.599	2.190	0.531	0.154
4950			38.208	9.791	2.238	0.543	0.158
5000			39.001	9.985	2.287	0.554	0.161
5100			40.613	10.378	2.385	0.577	0.168

Natural Gas Flow in CFH	10A 3/8"	15A 1/2"	20A 3/4"	25A 1"	32A 1-1/4"	38A 1-1/2"	50A 2"
EHD	15	19	25	31	39	48	62
5200			42.258	10.778	2.486	0.600	0.175
5300			43.936	11.186	2.589	0.624	0.182
5400			45.648	11.602	2.694	0.648	0.190
5500			47.393	12.024	2.801	0.673	0.197
5600			49.171	12.454	2.911	0.699	0.205
5700			50.983	12.892	3.023	0.724	0.213
5800			52.829	13.336	3.137	0.751	0.221
5900			54.708	13.789	3.253	0.777	0.229
6000			56.621	14.248	3.372	0.805	0.237
6100			58.567	14.715	3.493	0.832	0.246
6200			60.547	15.189	3.616	0.860	0.254
6300			62.561	15.670	3.741	0.889	0.263
6400			64.608	16.159	3.869	0.918	0.272
6500			66.689	16.655	3.999	0.948	0.281
6600			68.803	17.158	4.131	0.978	0.290
6700			70.952	17.669	4.265	1.008	0.300
6800			73.134	18.187	4.402	1.039	0.309
6900			75.350	18.712	4.541	1.071	0.319
7000			77.600	19.245	4.682	1.103	0.329
7100			79.883	19.784	4.826	1.136	0.339
7200			82.201	20.331	4.972	1.169	0.349
7300			84.552	20.886	5.120	1.202	0.360
7400			86.937	21.447	5.271	1.236	0.370
7500			89.356	22.016	5.424	1.270	0.381
7750			95.552	23.470	5.816	1.359	0.408
8000				24.969	6.223	1.450	0.437
8250				26.513	6.645	1.544	0.466
8500				28.103	7.081	1.641	0.497
8750				29.737	7.532	1.742	0.528
9000				31.416	7.997	1.845	0.561
9250				33.141	8.465	1.952	0.594
9500				34.910	8.947	2.061	0.629
9750				36.724	9.443	2.174	0.664
10000				38.583	9.953	2.289	0.701
10500				42.434	11.014	2.530	0.775
11000				46.464	12.132	2.783	0.852
11500				50.671	13.305	3.048	0.934
12000				55.056	14.534	3.325	1.019
12500				59.618	15.820	3.615	1.109
13000				64.357	17.162	3.918	1.202
13500				69.273	18.561	4.232	1.299
14000				74.364	20.017	4.559	1.399
14500				79.631	21.531	4.899	1.504
15000				85.074	23.101	5.251	1.613

SCHEDULE 40 BLACK IRON PIPE PRESSURE DROP PER FOOT

TABLE A-29

Pressure drop in inches of water column per foot ("WC per foot) at given CFH Flow
based on natural gas specific gravity of 0.60
Calculations based on NFPA 54 Low-Pressure Gas Formula

Natural Gas Flow in CFH	1/2	3/4	1	1-1/4	1-1/2	2	2-1/2	3	3-1/2	4
10	0.000	0.000	0.000	0.000	0.000	0.000	0.000	0.000	0.000	0.000
20	0.001	0.000	0.000	0.000	0.000	0.000	0.000	0.000	0.000	0.000
30	0.002	0.001	0.000	0.000	0.000	0.000	0.000	0.000	0.000	0.000
40	0.003	0.001	0.000	0.000	0.000	0.000	0.000	0.000	0.000	0.000
50	0.005	0.001	0.000	0.000	0.000	0.000	0.000	0.000	0.000	0.000
60	0.007	0.002	0.001	0.000	0.000	0.000	0.000	0.000	0.000	0.000
70	0.009	0.002	0.001	0.000	0.000	0.000	0.000	0.000	0.000	0.000
80	0.012	0.003	0.001	0.000	0.000	0.000	0.000	0.000	0.000	0.000
90	0.015	0.004	0.001	0.000	0.000	0.000	0.000	0.000	0.000	0.000
100	0.018	0.005	0.001	0.000	0.000	0.000	0.000	0.000	0.000	0.000
110	0.022	0.006	0.002	0.000	0.000	0.000	0.000	0.000	0.000	0.000
120	0.026	0.007	0.002	0.001	0.000	0.000	0.000	0.000	0.000	0.000
130	0.030	0.008	0.002	0.001	0.000	0.000	0.000	0.000	0.000	0.000
140	0.034	0.009	0.003	0.001	0.000	0.000	0.000	0.000	0.000	0.000
150	0.039	0.010	0.003	0.001	0.000	0.000	0.000	0.000	0.000	0.000
160	0.044	0.011	0.003	0.001	0.000	0.000	0.000	0.000	0.000	0.000
170	0.049	0.013	0.004	0.001	0.000	0.000	0.000	0.000	0.000	0.000
180	0.054	0.014	0.004	0.001	0.001	0.000	0.000	0.000	0.000	0.000
190	0.060	0.015	0.005	0.001	0.001	0.000	0.000	0.000	0.000	0.000
200	0.066	0.017	0.005	0.001	0.001	0.000	0.000	0.000	0.000	0.000
225	0.082	0.021	0.007	0.002	0.001	0.000	0.000	0.000	0.000	0.000
250	0.100	0.025	0.008	0.002	0.001	0.000	0.000	0.000	0.000	0.000
275	0.119	0.030	0.009	0.002	0.001	0.000	0.000	0.000	0.000	0.000
300	0.140	0.036	0.011	0.003	0.001	0.000	0.000	0.000	0.000	0.000
325	0.162	0.041	0.013	0.003	0.002	0.000	0.000	0.000	0.000	0.000
350	0.186	0.047	0.015	0.004	0.002	0.001	0.000	0.000	0.000	0.000
375	0.211	0.054	0.017	0.004	0.002	0.001	0.000	0.000	0.000	0.000
400	0.238	0.061	0.019	0.005	0.002	0.001	0.000	0.000	0.000	0.000
425	0.266	0.068	0.021	0.006	0.003	0.001	0.000	0.000	0.000	0.000
450	0.295	0.076	0.023	0.006	0.003	0.001	0.000	0.000	0.000	0.000
475	0.327	0.084	0.026	0.007	0.003	0.001	0.000	0.000	0.000	0.000
500	0.359	0.092	0.028	0.008	0.004	0.001	0.000	0.000	0.000	0.000
525	0.393	0.100	0.031	0.008	0.004	0.001	0.000	0.000	0.000	0.000
550	0.428	0.110	0.034	0.009	0.004	0.001	0.001	0.000	0.000	0.000
575	0.465	0.119	0.037	0.010	0.005	0.001	0.001	0.000	0.000	0.000
600	0.503	0.129	0.040	0.011	0.005	0.001	0.001	0.000	0.000	0.000
625	0.542	0.139	0.043	0.011	0.005	0.002	0.001	0.000	0.000	0.000
650	0.583	0.149	0.046	0.012	0.006	0.002	0.001	0.000	0.000	0.000
675	0.625	0.160	0.050	0.013	0.006	0.002	0.001	0.000	0.000	0.000
700	0.669	0.171	0.053	0.014	0.007	0.002	0.001	0.000	0.000	0.000
725	0.714	0.182	0.057	0.015	0.007	0.002	0.001	0.000	0.000	0.000
750	0.760	0.194	0.060	0.016	0.008	0.002	0.001	0.000	0.000	0.000
775	0.807	0.206	0.064	0.017	0.008	0.002	0.001	0.000	0.000	0.000
800	0.856	0.219	0.068	0.018	0.009	0.003	0.001	0.000	0.000	0.000
825	0.906	0.232	0.072	0.019	0.009	0.003	0.001	0.000	0.000	0.000

Natural Gas Flow in CFH	1/2	3/4	1	1-1/4	1-1/2	2	2-1/2	3	3-1/2	4
850	0.957	0.245	0.076	0.020	0.010	0.003	0.001	0.000	0.000	0.000
875	1.010	0.258	0.080	0.021	0.010	0.003	0.001	0.000	0.000	0.000
900	1.064	0.272	0.084	0.022	0.011	0.003	0.001	0.000	0.000	0.000
925	1.119	0.286	0.089	0.023	0.011	0.003	0.001	0.000	0.000	0.000
950	1.176	0.301	0.093	0.025	0.012	0.003	0.001	0.001	0.000	0.000
975	1.234	0.316	0.098	0.026	0.012	0.004	0.002	0.001	0.000	0.000
1000	1.293	0.331	0.103	0.027	0.013	0.004	0.002	0.001	0.000	0.000
1050	1.415	0.362	0.112	0.030	0.014	0.004	0.002	0.001	0.000	0.000
1100	1.542	0.394	0.122	0.032	0.015	0.005	0.002	0.001	0.000	0.000
1150	1.674	0.428	0.133	0.035	0.017	0.005	0.002	0.001	0.000	0.000
1200	1.811	0.463	0.144	0.038	0.018	0.005	0.002	0.001	0.000	0.000
1250	1.953	0.499	0.155	0.041	0.019	0.006	0.002	0.001	0.000	0.000
1300	2.100	0.537	0.167	0.044	0.021	0.006	0.003	0.001	0.000	0.000
1350	2.251	0.576	0.179	0.047	0.022	0.007	0.003	0.001	0.000	0.000
1400	2.408	0.616	0.191	0.051	0.024	0.007	0.003	0.001	0.001	0.000
1450	2.569	0.657	0.204	0.054	0.026	0.008	0.003	0.001	0.001	0.000
1500	2.736	0.700	0.217	0.057	0.027	0.008	0.003	0.001	0.001	0.000
1550	2.906	0.743	0.231	0.061	0.029	0.009	0.004	0.001	0.001	0.000
1600	3.082	0.788	0.245	0.065	0.031	0.009	0.004	0.001	0.001	0.000
1650	3.263	0.834	0.259	0.068	0.032	0.010	0.004	0.001	0.001	0.000
1700	3.448	0.882	0.274	0.072	0.034	0.010	0.004	0.002	0.001	0.000
1750	3.637	0.930	0.289	0.076	0.036	0.011	0.005	0.002	0.001	0.000
1800	3.832	0.980	0.304	0.080	0.038	0.011	0.005	0.002	0.001	0.000
1850	4.031	1.031	0.320	0.085	0.040	0.012	0.005	0.002	0.001	0.000
1900	4.235	1.083	0.336	0.089	0.042	0.013	0.005	0.002	0.001	0.000
1950	4.443	1.136	0.352	0.093	0.044	0.013	0.006	0.002	0.001	0.001
2000	4.656	1.191	0.369	0.098	0.046	0.014	0.006	0.002	0.001	0.001
2050	4.873	1.246	0.387	0.102	0.048	0.014	0.006	0.002	0.001	0.001
2100	5.095	1.303	0.404	0.107	0.051	0.015	0.006	0.002	0.001	0.001
2150	5.322	1.361	0.422	0.112	0.053	0.016	0.007	0.002	0.001	0.001
2200	5.553	1.420	0.441	0.117	0.055	0.016	0.007	0.002	0.001	0.001
2250	5.788	1.480	0.459	0.121	0.058	0.017	0.007	0.003	0.001	0.001
2300	6.028	1.542	0.478	0.127	0.060	0.018	0.008	0.003	0.001	0.001
2350	6.273	1.604	0.498	0.132	0.062	0.019	0.008	0.003	0.001	0.001
2400	6.522	1.668	0.517	0.137	0.065	0.019	0.008	0.003	0.001	0.001
2450	6.775	1.733	0.538	0.142	0.067	0.020	0.008	0.003	0.001	0.001
2500	7.033	1.799	0.558	0.148	0.070	0.021	0.009	0.003	0.002	0.001
2550	7.295	1.866	0.579	0.153	0.073	0.022	0.009	0.003	0.002	0.001
2600	7.561	1.934	0.600	0.159	0.075	0.022	0.009	0.003	0.002	0.001
2650	7.832	2.003	0.621	0.164	0.078	0.023	0.010	0.003	0.002	0.001
2700	8.108	2.074	0.643	0.170	0.081	0.024	0.010	0.004	0.002	0.001
2750	8.387	2.145	0.665	0.176	0.083	0.025	0.010	0.004	0.002	0.001
2800	8.672	2.218	0.688	0.182	0.086	0.026	0.011	0.004	0.002	0.001
2850	8.960	2.292	0.711	0.188	0.089	0.027	0.011	0.004	0.002	0.001
2900	9.253	2.366	0.734	0.194	0.092	0.027	0.012	0.004	0.002	0.001

SCHEDULE 40 BLACK IRON PIPE PRESSURE DROP PER FOOT

TABLE A-29

Pressure drop in inches of water column per foot ("WC per foot) at given CFH Flow
based on natural gas specific gravity of 0.60
Calculations based on NFPA 54 Low-Pressure Gas Formula

Natural Gas Flow in CFH	1/2	3/4	1	1-1/4	1-1/2	2	2-1/2	3	3-1/2	4
2950	9.550	2.442	0.758	0.200	0.095	0.028	0.012	0.004	0.002	0.001
3000	9.851	2.519	0.782	0.207	0.098	0.029	0.012	0.004	0.002	0.001
3050	10.157	2.598	0.806	0.213	0.101	0.030	0.013	0.004	0.002	0.001
3100	10.467	2.677	0.830	0.220	0.104	0.031	0.013	0.005	0.002	0.001
3150	10.781	2.757	0.855	0.226	0.107	0.032	0.013	0.005	0.002	0.001
3200	11.099	2.839	0.881	0.233	0.110	0.033	0.014	0.005	0.002	0.001
3250	11.422	2.921	0.906	0.240	0.114	0.034	0.014	0.005	0.002	0.001
3300	11.749	3.005	0.932	0.247	0.117	0.035	0.015	0.005	0.003	0.001
3350	12.080	3.090	0.958	0.254	0.120	0.036	0.015	0.005	0.003	0.001
3400	12.415	3.175	0.985	0.261	0.123	0.037	0.016	0.005	0.003	0.001
3450	12.755	3.262	1.012	0.268	0.127	0.038	0.016	0.006	0.003	0.001
3500	13.099	3.350	1.039	0.275	0.130	0.039	0.016	0.006	0.003	0.002
3550	13.447	3.439	1.067	0.282	0.134	0.040	0.017	0.006	0.003	0.002
3600	13.799	3.529	1.095	0.290	0.137	0.041	0.017	0.006	0.003	0.002
3650	14.155	3.620	1.123	0.297	0.141	0.042	0.018	0.006	0.003	0.002
3700	14.516	3.712	1.152	0.305	0.144	0.043	0.018	0.006	0.003	0.002
3750	14.880	3.806	1.181	0.312	0.148	0.044	0.019	0.006	0.003	0.002
3800	15.249	3.900	1.210	0.320	0.152	0.045	0.019	0.007	0.003	0.002
3850	15.622	3.995	1.239	0.328	0.155	0.046	0.020	0.007	0.003	0.002
3900	15.999	4.092	1.269	0.336	0.159	0.047	0.020	0.007	0.003	0.002
3950	16.380	4.189	1.300	0.344	0.163	0.048	0.020	0.007	0.004	0.002
4000	16.766	4.288	1.330	0.352	0.167	0.050	0.021	0.007	0.004	0.002
4050	17.155	4.388	1.361	0.360	0.171	0.051	0.021	0.007	0.004	0.002
4100	17.549	4.488	1.392	0.368	0.174	0.052	0.022	0.008	0.004	0.002
4150	17.946	4.590	1.424	0.377	0.178	0.053	0.022	0.008	0.004	0.002
4200	18.348	4.693	1.456	0.385	0.182	0.054	0.023	0.008	0.004	0.002
4250	18.754	4.796	1.488	0.394	0.186	0.056	0.023	0.008	0.004	0.002
4300	19.164	4.901	1.520	0.402	0.191	0.057	0.024	0.008	0.004	0.002
4350	19.577	5.007	1.553	0.411	0.195	0.058	0.024	0.009	0.004	0.002
4400	19.995	5.114	1.586	0.420	0.199	0.059	0.025	0.009	0.004	0.002
4450	20.417	5.222	1.620	0.429	0.203	0.060	0.026	0.009	0.004	0.002
4500	20.844	5.331	1.654	0.438	0.207	0.062	0.026	0.009	0.004	0.002
4550	21.274	5.441	1.688	0.447	0.211	0.063	0.027	0.009	0.005	0.002
4600	21.708	5.552	1.722	0.456	0.216	0.064	0.027	0.009	0.005	0.003
4650	22.146	5.664	1.757	0.465	0.220	0.066	0.028	0.010	0.005	0.003
4700	22.588	5.777	1.792	0.474	0.225	0.067	0.028	0.010	0.005	0.003
4750	23.034	5.891	1.827	0.483	0.229	0.068	0.029	0.010	0.005	0.003
4800	23.484	6.006	1.863	0.493	0.233	0.070	0.029	0.010	0.005	0.003
4850	23.939	6.122	1.899	0.502	0.238	0.071	0.030	0.010	0.005	0.003
4900	24.397	6.240	1.936	0.512	0.243	0.072	0.031	0.011	0.005	0.003
4950	24.859	6.358	1.972	0.522	0.247	0.074	0.031	0.011	0.005	0.003
5000	25.325	6.477	2.009	0.532	0.252	0.075	0.032	0.011	0.005	0.003
5100	26.269	6.719	2.084	0.551	0.261	0.078	0.033	0.011	0.006	0.003
5200	27.229	6.964	2.160	0.572	0.271	0.081	0.034	0.012	0.006	0.003

Natural Gas Flow in CFH	1/2	3/4	1	1-1/4	1-1/2	2	2-1/2	3	3-1/2	4
5300	28.205	7.214	2.238	0.592	0.280	0.083	0.035	0.012	0.006	0.003
5400	29.197	7.467	2.316	0.613	0.290	0.086	0.037	0.013	0.006	0.003
5500	30.204	7.725	2.396	0.634	0.300	0.089	0.038	0.013	0.007	0.004
5600	31.227	7.986	2.477	0.655	0.310	0.092	0.039	0.014	0.007	0.004
5700	32.265	8.252	2.560	0.677	0.321	0.096	0.040	0.014	0.007	0.004
5800	33.319	8.522	2.643	0.699	0.331	0.099	0.042	0.015	0.007	0.004
5900	34.389	8.795	2.728	0.722	0.342	0.102	0.043	0.015	0.007	0.004
6000	35.474	9.073	2.814	0.745	0.353	0.105	0.044	0.015	0.008	0.004
6100	36.575	9.354	2.902	0.768	0.364	0.108	0.046	0.016	0.008	0.004
6200	37.691	9.640	2.990	0.791	0.375	0.112	0.047	0.016	0.008	0.004
6300	38.822	9.929	3.080	0.815	0.386	0.115	0.049	0.017	0.008	0.005
6400	39.969	10.222	3.171	0.839	0.397	0.118	0.050	0.017	0.009	0.005
6500	41.131	10.520	3.263	0.863	0.409	0.122	0.051	0.018	0.009	0.005
6600	42.308	10.821	3.357	0.888	0.421	0.125	0.053	0.018	0.009	0.005
6700	43.501	11.126	3.451	0.913	0.432	0.129	0.054	0.019	0.009	0.005
6800	44.708	11.434	3.547	0.938	0.444	0.132	0.056	0.020	0.010	0.005
6900	45.931	11.747	3.644	0.964	0.457	0.136	0.057	0.020	0.010	0.005
7000	47.169	12.064	3.742	0.990	0.469	0.140	0.059	0.021	0.010	0.006
7100	48.422	12.384	3.842	1.016	0.481	0.143	0.061	0.021	0.010	0.006
7200	49.690	12.709	3.942	1.043	0.494	0.147	0.062	0.022	0.011	0.006
7300	50.974	13.037	4.044	1.070	0.507	0.151	0.064	0.022	0.011	0.006
7400	52.272	13.369	4.147	1.097	0.520	0.155	0.065	0.023	0.011	0.006
7500	53.585	13.705	4.251	1.125	0.533	0.159	0.067	0.023	0.012	0.006
7750	56.933	14.561	4.517	1.195	0.566	0.169	0.071	0.025	0.012	0.007
8000	60.374	15.441	4.790	1.267	0.600	0.179	0.076	0.026	0.013	0.007
8250	63.908	16.345	5.070	1.341	0.635	0.189	0.080	0.028	0.014	0.007
8500	67.533	17.272	5.358	1.418	0.671	0.200	0.084	0.029	0.015	0.008
8750	71.251	18.223	5.653	1.496	0.708	0.211	0.089	0.031	0.015	0.008
9000	75.059	19.197	5.955	1.575	0.746	0.222	0.094	0.033	0.016	0.009
9250	78.958	20.194	6.264	1.657	0.785	0.234	0.099	0.034	0.017	0.009
9500	82.948	21.215	6.581	1.741	0.825	0.246	0.104	0.036	0.018	0.010
9750	87.028	22.258	6.905	1.827	0.865	0.258	0.109	0.038	0.019	0.010
10000	91.198	23.324	7.235	1.914	0.907	0.270	0.114	0.040	0.020	0.011
10500	99.805	25.526	7.918	2.095	0.992	0.295	0.125	0.044	0.022	0.012
11000	108.766	27.818	8.629	2.283	1.081	0.322	0.136	0.047	0.023	0.013
11500	118.081	30.200	9.368	2.479	1.174	0.350	0.148	0.052	0.025	0.014
12000	127.745	32.672	10.135	2.681	1.270	0.378	0.160	0.056	0.028	0.015
12500	137.757	35.232	10.929	2.892	1.369	0.408	0.172	0.060	0.030	0.016
13000	148.115	37.882	11.751	3.109	1.472	0.438	0.185	0.065	0.032	0.017
13500	158.817	40.619	12.600	3.334	1.579	0.470	0.199	0.069	0.034	0.019
14000	169.860	43.443	13.476	3.565	1.689	0.503	0.212	0.074	0.037	0.020
14500	181.243	46.354	14.379	3.804	1.802	0.536	0.227	0.079	0.039	0.021
15000	192.964	49.352	15.309	4.050	1.918	0.571	0.241	0.084	0.042	0.023

POLYETHYLENE PIPE PRESSURE DROP PER FOOT

TABLE A-30

Pressure drop in inches of water column per foot ("WC per foot) at given CFH Flow
based on natural gas specific gravity of 0.60
Calculations based on NFPA 54 Low-Pressure Gas Formula

Natural Gas Flow in CFH	1/2	3/4	1	1-1/4	1-1/2	2	2-1/2	3	3-1/2	4
10	0.000	0.000	0.000	0.000	0.000	0.000	0.000	0.000	0.000	0.000
20	0.001	0.000	0.000	0.000	0.000	0.000	0.000	0.000	0.000	0.000
30	0.001	0.000	0.000	0.000	0.000	0.000	0.000	0.000	0.000	0.000
40	0.003	0.001	0.000	0.000	0.000	0.000	0.000	0.000	0.000	0.000
50	0.004	0.001	0.000	0.000	0.000	0.000	0.000	0.000	0.000	0.000
60	0.005	0.001	0.000	0.000	0.000	0.000	0.000	0.000	0.000	0.000
70	0.007	0.002	0.001	0.000	0.000	0.000	0.000	0.000	0.000	0.000
80	0.009	0.003	0.001	0.000	0.000	0.000	0.000	0.000	0.000	0.000
90	0.011	0.003	0.001	0.000	0.000	0.000	0.000	0.000	0.000	0.000
100	0.014	0.004	0.001	0.000	0.000	0.000	0.000	0.000	0.000	0.000
110	0.016	0.005	0.002	0.001	0.000	0.000	0.000	0.000	0.000	0.000
120	0.019	0.005	0.002	0.001	0.000	0.000	0.000	0.000	0.000	0.000
130	0.022	0.006	0.002	0.001	0.000	0.000	0.000	0.000	0.000	0.000
140	0.026	0.007	0.002	0.001	0.000	0.000	0.000	0.000	0.000	0.000
150	0.029	0.008	0.003	0.001	0.000	0.000	0.000	0.000	0.000	0.000
160	0.033	0.009	0.003	0.001	0.001	0.000	0.000	0.000	0.000	0.000
170	0.037	0.010	0.003	0.001	0.001	0.000	0.000	0.000	0.000	0.000
180	0.041	0.011	0.004	0.001	0.001	0.000	0.000	0.000	0.000	0.000
190	0.045	0.012	0.004	0.002	0.001	0.000	0.000	0.000	0.000	0.000
200	0.050	0.014	0.005	0.002	0.001	0.000	0.000	0.000	0.000	0.000
225	0.062	0.017	0.006	0.002	0.001	0.000	0.000	0.000	0.000	0.000
250	0.075	0.021	0.007	0.003	0.001	0.000	0.000	0.000	0.000	0.000
275	0.089	0.025	0.008	0.003	0.001	0.000	0.000	0.000	0.000	0.000
300	0.105	0.029	0.010	0.004	0.002	0.001	0.000	0.000	0.000	0.000
325	0.121	0.034	0.011	0.004	0.002	0.001	0.000	0.000	0.000	0.000
350	0.139	0.039	0.013	0.005	0.002	0.001	0.000	0.000	0.000	0.000
375	0.158	0.044	0.015	0.005	0.002	0.001	0.000	0.000	0.000	0.000
400	0.178	0.049	0.017	0.006	0.003	0.001	0.000	0.000	0.000	0.000
425	0.199	0.055	0.019	0.007	0.003	0.001	0.000	0.000	0.000	0.000
450	0.222	0.061	0.021	0.007	0.003	0.001	0.000	0.000	0.000	0.000
475	0.245	0.068	0.023	0.008	0.004	0.001	0.000	0.000	0.000	0.000
500	0.269	0.075	0.025	0.009	0.004	0.001	0.000	0.000	0.000	0.000
525	0.295	0.082	0.027	0.010	0.005	0.002	0.000	0.000	0.000	0.000
550	0.321	0.089	0.030	0.011	0.005	0.002	0.000	0.000	0.000	0.000
575	0.349	0.097	0.032	0.012	0.005	0.002	0.000	0.000	0.000	0.000
600	0.377	0.105	0.035	0.013	0.006	0.002	0.000	0.000	0.000	0.000
625	0.407	0.113	0.038	0.014	0.006	0.002	0.000	0.000	0.000	0.000
650	0.437	0.121	0.041	0.015	0.007	0.002	0.000	0.000	0.000	0.000
675	0.469	0.130	0.044	0.016	0.007	0.002	0.000	0.000	0.000	0.000
700	0.502	0.139	0.047	0.017	0.008	0.003	0.000	0.000	0.000	0.000
725	0.535	0.148	0.050	0.018	0.008	0.003	0.000	0.000	0.000	0.000
750	0.570	0.158	0.053	0.019	0.009	0.003	0.000	0.000	0.000	0.000
775	0.605	0.168	0.056	0.020	0.010	0.003	0.000	0.000	0.000	0.000
800	0.642	0.178	0.060	0.022	0.010	0.003	0.001	0.000	0.000	0.000
825	0.680	0.188	0.063	0.023	0.011	0.004	0.001	0.000	0.000	0.000

Natural Gas Flow in CFH	1/2	3/4	1	1-1/4	1-1/2	2	2-1/2	3	3-1/2	4
850	0.718	0.199	0.067	0.024	0.011	0.004	0.001	0.000	0.000	0.000
875	0.758	0.210	0.071	0.026	0.012	0.004	0.001	0.000	0.000	0.000
900	0.798	0.221	0.074	0.027	0.013	0.004	0.001	0.000	0.000	0.000
925	0.840	0.233	0.078	0.028	0.013	0.004	0.001	0.000	0.000	0.000
950	0.882	0.244	0.082	0.030	0.014	0.005	0.001	0.000	0.000	0.000
975	0.925	0.256	0.086	0.031	0.015	0.005	0.001	0.000	0.000	0.000
1000	0.970	0.269	0.090	0.033	0.015	0.005	0.001	0.000	0.000	0.000
1050	1.061	0.294	0.099	0.036	0.017	0.006	0.001	0.000	0.000	0.000
1100	1.157	0.321	0.108	0.039	0.018	0.006	0.001	0.000	0.000	0.000
1150	1.256	0.348	0.117	0.042	0.020	0.007	0.001	0.000	0.000	0.000
1200	1.358	0.376	0.126	0.046	0.021	0.007	0.001	0.000	0.000	0.000
1250	1.465	0.406	0.136	0.049	0.023	0.008	0.001	0.000	0.000	0.000
1300	1.575	0.436	0.147	0.053	0.025	0.008	0.001	0.000	0.000	0.000
1350	1.689	0.468	0.157	0.057	0.027	0.009	0.001	0.000	0.000	0.000
1400	1.806	0.501	0.168	0.061	0.028	0.010	0.001	0.000	0.001	0.000
1450	1.927	0.534	0.179	0.065	0.030	0.010	0.002	0.000	0.001	0.000
1500	2.052	0.569	0.191	0.069	0.032	0.011	0.002	0.000	0.001	0.000
1550	2.180	0.604	0.203	0.073	0.034	0.012	0.002	0.001	0.001	0.000
1600	2.312	0.641	0.215	0.078	0.036	0.012	0.002	0.001	0.001	0.000
1650	2.447	0.678	0.228	0.082	0.039	0.013	0.002	0.001	0.001	0.000
1700	2.586	0.717	0.241	0.087	0.041	0.014	0.002	0.001	0.001	0.000
1750	2.729	0.756	0.254	0.092	0.043	0.015	0.002	0.001	0.001	0.000
1800	2.874	0.797	0.268	0.097	0.045	0.015	0.002	0.001	0.001	0.000
1850	3.024	0.838	0.281	0.102	0.048	0.016	0.002	0.001	0.001	0.000
1900	3.176	0.880	0.296	0.107	0.050	0.017	0.003	0.001	0.001	0.000
1950	3.333	0.924	0.310	0.112	0.052	0.018	0.003	0.001	0.001	0.001
2000	3.492	0.968	0.325	0.118	0.055	0.019	0.003	0.001	0.001	0.001
2050	3.655	1.013	0.340	0.123	0.058	0.019	0.003	0.001	0.001	0.001
2100	3.822	1.059	0.356	0.129	0.060	0.020	0.003	0.001	0.001	0.001
2150	3.992	1.106	0.372	0.135	0.063	0.021	0.003	0.001	0.001	0.001
2200	4.165	1.154	0.388	0.140	0.066	0.022	0.003	0.001	0.001	0.001
2250	4.342	1.203	0.404	0.146	0.068	0.023	0.004	0.001	0.001	0.001
2300	4.522	1.253	0.421	0.152	0.071	0.024	0.004	0.001	0.001	0.001
2350	4.705	1.304	0.438	0.159	0.074	0.025	0.004	0.001	0.001	0.001
2400	4.892	1.356	0.455	0.165	0.077	0.026	0.004	0.001	0.001	0.001
2450	5.082	1.408	0.473	0.171	0.080	0.027	0.004	0.001	0.001	0.001
2500	5.275	1.462	0.491	0.178	0.083	0.028	0.004	0.001	0.002	0.001
2550	5.472	1.516	0.509	0.184	0.086	0.029	0.004	0.001	0.002	0.001
2600	5.672	1.572	0.528	0.191	0.089	0.030	0.005	0.001	0.002	0.001
2650	5.875	1.628	0.547	0.198	0.092	0.031	0.005	0.001	0.002	0.001
2700	6.082	1.685	0.566	0.205	0.096	0.032	0.005	0.001	0.002	0.001
2750	6.292	1.743	0.586	0.212	0.099	0.034	0.005	0.002	0.002	0.001
2800	6.505	1.803	0.605	0.219	0.102	0.035	0.005	0.002	0.002	0.001
2850	6.721	1.862	0.626	0.227	0.106	0.036	0.005	0.002	0.002	0.001
2900	6.941	1.923	0.646	0.234	0.109	0.037	0.006	0.002	0.002	0.001

TABLE A-30

Pressure drop in inches of water column per foot ("WC per foot) at given CFH Flow
based on natural gas specific gravity of 0.60
Calculations based on NFPA 54 Low-Pressure Gas Formula

Natural Gas Flow in CFH	1/2	3/4	1	1-1/4	1-1/2	2	2-1/2	3	3-1/2	4
2950	7.163	1.985	0.667	0.241	0.113	0.038	0.006	0.002	0.002	0.001
3000	7.389	2.048	0.688	0.249	0.116	0.039	0.006	0.002	0.002	0.001
3050	7.619	2.111	0.709	0.257	0.120	0.041	0.006	0.002	0.002	0.001
3100	7.851	2.176	0.731	0.265	0.124	0.042	0.006	0.002	0.002	0.001
3150	8.087	2.241	0.753	0.273	0.127	0.043	0.007	0.002	0.002	0.001
3200	8.326	2.307	0.775	0.281	0.131	0.044	0.007	0.002	0.002	0.001
3250	8.568	2.374	0.798	0.289	0.135	0.046	0.007	0.002	0.002	0.001
3300	8.813	2.442	0.820	0.297	0.139	0.047	0.007	0.002	0.003	0.001
3350	9.061	2.511	0.843	0.305	0.143	0.048	0.007	0.002	0.003	0.001
3400	9.313	2.581	0.867	0.314	0.147	0.050	0.008	0.002	0.003	0.001
3450	9.568	2.651	0.891	0.323	0.151	0.051	0.008	0.002	0.003	0.001
3500	9.826	2.723	0.915	0.331	0.155	0.052	0.008	0.002	0.003	0.002
3550	10.087	2.795	0.939	0.340	0.159	0.054	0.008	0.002	0.003	0.002
3600	10.351	2.868	0.964	0.349	0.163	0.055	0.008	0.002	0.003	0.002
3650	10.618	2.942	0.988	0.358	0.167	0.057	0.009	0.003	0.003	0.002
3700	10.889	3.017	1.014	0.367	0.171	0.058	0.009	0.003	0.003	0.002
3750	11.162	3.093	1.039	0.376	0.176	0.059	0.009	0.003	0.003	0.002
3800	11.439	3.170	1.065	0.386	0.180	0.061	0.009	0.003	0.003	0.002
3850	11.719	3.247	1.091	0.395	0.184	0.062	0.010	0.003	0.003	0.002
3900	12.001	3.326	1.117	0.405	0.189	0.064	0.010	0.003	0.003	0.002
3950	12.287	3.405	1.144	0.414	0.193	0.065	0.010	0.003	0.004	0.002
4000	12.576	3.485	1.171	0.424	0.198	0.067	0.010	0.003	0.004	0.002
4050	12.868	3.566	1.198	0.434	0.202	0.069	0.010	0.003	0.004	0.002
4100	13.164	3.648	1.225	0.444	0.207	0.070	0.011	0.003	0.004	0.002
4150	13.462	3.730	1.253	0.454	0.212	0.072	0.011	0.003	0.004	0.002
4200	13.763	3.814	1.281	0.464	0.217	0.073	0.011	0.003	0.004	0.002
4250	14.068	3.898	1.309	0.474	0.221	0.075	0.011	0.003	0.004	0.002
4300	14.375	3.983	1.338	0.485	0.226	0.077	0.012	0.003	0.004	0.002
4350	14.686	4.070	1.367	0.495	0.231	0.078	0.012	0.004	0.004	0.002
4400	14.999	4.156	1.396	0.506	0.236	0.080	0.012	0.004	0.004	0.002
4450	15.316	4.244	1.426	0.516	0.241	0.082	0.012	0.004	0.004	0.002
4500	15.635	4.333	1.455	0.527	0.246	0.083	0.013	0.004	0.004	0.002
4550	15.958	4.422	1.485	0.538	0.251	0.085	0.013	0.004	0.005	0.002
4600	16.284	4.512	1.516	0.549	0.256	0.087	0.013	0.004	0.005	0.003
4650	16.612	4.603	1.546	0.560	0.261	0.088	0.013	0.004	0.005	0.003
4700	16.944	4.695	1.577	0.571	0.267	0.090	0.014	0.004	0.005	0.003
4750	17.279	4.788	1.608	0.582	0.272	0.092	0.014	0.004	0.005	0.003
4800	17.616	4.882	1.640	0.594	0.277	0.094	0.014	0.004	0.005	0.003
4850	17.957	4.976	1.672	0.605	0.283	0.096	0.015	0.004	0.005	0.003
4900	18.301	5.071	1.704	0.617	0.288	0.097	0.015	0.004	0.005	0.003
4950	18.647	5.167	1.736	0.629	0.293	0.099	0.015	0.004	0.005	0.003
5000	18.997	5.264	1.768	0.640	0.299	0.101	0.015	0.005	0.005	0.003
5100	19.705	5.461	1.834	0.664	0.310	0.105	0.016	0.005	0.006	0.003
5200	20.425	5.660	1.901	0.689	0.321	0.109	0.017	0.005	0.006	0.003

Natural Gas Flow in CFH	1/2	3/4	1	1-1/4	1-1/2	2	2-1/2	3	3-1/2	4
5300	21.157	5.863	1.969	0.713	0.333	0.113	0.017	0.005	0.006	0.003
5400	21.901	6.069	2.039	0.738	0.345	0.117	0.018	0.005	0.006	0.003
5500	22.657	6.278	2.109	0.764	0.356	0.121	0.018	0.005	0.007	0.004
5600	23.424	6.491	2.180	0.790	0.369	0.125	0.019	0.006	0.007	0.004
5700	24.203	6.707	2.253	0.816	0.381	0.129	0.020	0.006	0.007	0.004
5800	24.994	6.926	2.327	0.843	0.393	0.133	0.020	0.006	0.007	0.004
5900	25.796	7.148	2.401	0.870	0.406	0.137	0.021	0.006	0.007	0.004
6000	26.610	7.374	2.477	0.897	0.419	0.142	0.022	0.006	0.008	0.004
6100	27.436	7.603	2.554	0.925	0.432	0.146	0.022	0.007	0.008	0.004
6200	28.273	7.835	2.632	0.953	0.445	0.151	0.023	0.007	0.008	0.004
6300	29.122	8.070	2.711	0.982	0.458	0.155	0.024	0.007	0.008	0.005
6400	29.982	8.308	2.791	1.011	0.472	0.160	0.024	0.007	0.009	0.005
6500	30.853	8.550	2.872	1.040	0.485	0.164	0.025	0.007	0.009	0.005
6600	31.736	8.794	2.954	1.070	0.499	0.169	0.026	0.008	0.009	0.005
6700	32.631	9.042	3.037	1.100	0.513	0.174	0.026	0.008	0.009	0.005
6800	33.537	9.293	3.122	1.131	0.528	0.179	0.027	0.008	0.010	0.005
6900	34.454	9.548	3.207	1.161	0.542	0.184	0.028	0.008	0.010	0.005
7000	35.383	9.805	3.294	1.193	0.557	0.188	0.029	0.008	0.010	0.006
7100	36.323	10.065	3.381	1.224	0.571	0.193	0.029	0.009	0.010	0.006
7200	37.274	10.329	3.470	1.257	0.586	0.199	0.030	0.009	0.011	0.006
7300	38.237	10.596	3.559	1.289	0.602	0.204	0.031	0.009	0.011	0.006
7400	39.211	10.866	3.650	1.322	0.617	0.209	0.032	0.009	0.011	0.006
7500	40.196	11.139	3.742	1.355	0.632	0.214	0.033	0.010	0.012	0.006
7750	42.707	11.835	3.975	1.440	0.672	0.227	0.035	0.010	0.012	0.007
8000	45.288	12.550	4.216	1.527	0.713	0.241	0.037	0.011	0.013	0.007
8250	47.939	13.284	4.462	1.616	0.754	0.255	0.039	0.012	0.014	0.007
8500	50.659	14.038	4.716	1.708	0.797	0.270	0.041	0.012	0.015	0.008
8750	53.447	14.811	4.975	1.802	0.841	0.285	0.043	0.013	0.015	0.008
9000	56.304	15.602	5.241	1.898	0.886	0.300	0.046	0.014	0.016	0.009
9250	59.229	16.413	5.513	1.997	0.932	0.315	0.048	0.014	0.017	0.009
9500	62.222	17.242	5.792	2.097	0.979	0.331	0.051	0.015	0.018	0.010
9750	65.282	18.090	6.077	2.201	1.027	0.348	0.053	0.016	0.019	0.010
10000	68.410	18.957	6.368	2.306	1.076	0.364	0.056	0.016	0.020	0.011
10500	74.866	20.746	6.969	2.524	1.178	0.399	0.061	0.018	0.022	0.012
11000	81.589	22.609	7.595	2.750	1.284	0.435	0.066	0.020	0.023	0.013
11500	88.576	24.545	8.245	2.986	1.394	0.472	0.072	0.021	0.025	0.014
12000	95.825	26.554	8.920	3.230	1.508	0.510	0.078	0.023	0.028	0.015
12500	103.336	28.635	9.619	3.483	1.626	0.550	0.084	0.025	0.030	0.016
13000	111.105	30.788	10.342	3.745	1.748	0.592	0.090	0.027	0.032	0.017
13500	119.133	33.013	11.089	4.016	1.874	0.635	0.097	0.029	0.034	0.019
14000	127.417	35.308	11.860	4.295	2.005	0.679	0.103	0.031	0.037	0.020
14500	135.955	37.675	12.655	4.583	2.139	0.724	0.110	0.033	0.039	0.021
15000	144.748	40.111	13.474	4.879	2.277	0.771	0.118	0.035	0.042	0.023

TABLE A-31

Pressure drop in inches of water column per foot ("WC per foot) at given KBTU based on propane gas specific gravity of 1.52

Propane Gas Flow in KBTU	10A 3/8"	15A 1/2"	20A 3/4"	25A 1"	32A 1-1/4"	38A 1-1/2"	50A 2"
EHD	15	19	25	31	39	48	62
10	0.001	0.000	0.000	0.000	0.000	0.000	0.000
20	0.004	0.001	0.000	0.000	0.000	0.000	0.000
30	0.010	0.002	0.000	0.000	0.000	0.000	0.000
40	0.017	0.003	0.001	0.000	0.000	0.000	0.000
50	0.026	0.005	0.001	0.000	0.000	0.000	0.000
60	0.037	0.008	0.002	0.000	0.000	0.000	0.000
70	0.050	0.011	0.002	0.001	0.000	0.000	0.000
80	0.064	0.014	0.003	0.001	0.000	0.000	0.000
90	0.081	0.018	0.004	0.001	0.000	0.000	0.000
100	0.099	0.022	0.005	0.001	0.000	0.000	0.000
110	0.119	0.027	0.006	0.002	0.000	0.000	0.000
120	0.141	0.032	0.007	0.002	0.000	0.000	0.000
130	0.164	0.037	0.009	0.002	0.000	0.000	0.000
140	0.190	0.043	0.010	0.003	0.000	0.000	0.000
150	0.217	0.050	0.012	0.003	0.000	0.000	0.000
160	0.246	0.057	0.013	0.004	0.001	0.000	0.000
170	0.277	0.064	0.015	0.004	0.001	0.000	0.000
180	0.309	0.071	0.017	0.005	0.001	0.000	0.000
190	0.343	0.079	0.019	0.005	0.001	0.000	0.000
200	0.379	0.088	0.021	0.006	0.001	0.000	0.000
225	0.476	0.110	0.027	0.007	0.001	0.000	0.000
250	0.584	0.136	0.033	0.009	0.001	0.000	0.000
275	0.702	0.164	0.041	0.011	0.002	0.001	0.000
300	0.831	0.194	0.049	0.013	0.002	0.001	0.000
325	0.970	0.228	0.057	0.016	0.003	0.001	0.000
350	1.120	0.263	0.067	0.018	0.003	0.001	0.000
375	1.280	0.301	0.077	0.021	0.003	0.001	0.000
400	1.450	0.342	0.087	0.024	0.004	0.001	0.000
425	1.631	0.385	0.099	0.028	0.005	0.001	0.000
450	1.822	0.431	0.111	0.031	0.005	0.002	0.000
475	2.023	0.480	0.124	0.035	0.006	0.002	0.000
500	2.234	0.531	0.138	0.039	0.006	0.002	0.000
525	2.455	0.584	0.152	0.043	0.007	0.002	0.001
550	2.687	0.640	0.168	0.047	0.008	0.002	0.001
575	2.928	0.698	0.184	0.052	0.009	0.003	0.001
600	3.180	0.759	0.200	0.057	0.009	0.003	0.001
625	3.442	0.822	0.218	0.062	0.010	0.003	0.001
650	3.713	0.888	0.236	0.067	0.011	0.003	0.001
675	3.995	0.957	0.255	0.073	0.012	0.004	0.001
700	4.286	1.028	0.274	0.078	0.013	0.004	0.001
725	4.588	1.101	0.295	0.084	0.014	0.004	0.001
750	4.899	1.177	0.316	0.091	0.015	0.004	0.001
775	5.220	1.255	0.338	0.097	0.016	0.005	0.001
800	5.551	1.336	0.361	0.104	0.017	0.005	0.001
825	5.892	1.419	0.384	0.111	0.019	0.005	0.001

Propane Gas Flow in KBTU	10A 3/8"	15A 1/2"	20A 3/4"	25A 1"	32A 1-1/4"	38A 1-1/2"	50A 2"
EHD	15	19	25	31	39	48	62
850	6.243	1.505	0.408	0.118	0.020	0.006	0.001
875	6.603	1.593	0.433	0.125	0.021	0.006	0.002
900	6.973	1.684	0.459	0.133	0.022	0.006	0.002
925	7.353	1.777	0.485	0.141	0.024	0.007	0.002
950	7.743	1.872	0.512	0.149	0.025	0.007	0.002
975	8.142	1.970	0.540	0.157	0.026	0.008	0.002
1000	8.552	2.071	0.569	0.165	0.028	0.008	0.002
1050	9.399	2.279	0.629	0.183	0.031	0.009	0.002
1100	10.285	2.498	0.692	0.202	0.034	0.010	0.002
1150	11.210	2.725	0.757	0.222	0.038	0.011	0.003
1200	12.173	2.963	0.826	0.242	0.041	0.012	0.003
1250	13.174	3.211	0.898	0.264	0.045	0.013	0.003
1300	14.214	3.468	0.973	0.287	0.049	0.014	0.003
1350	15.292	3.735	1.051	0.310	0.053	0.015	0.004
1400	16.407	4.011	1.132	0.335	0.057	0.016	0.004
1450	17.561	4.298	1.217	0.360	0.062	0.017	0.004
1500	18.753	4.594	1.304	0.387	0.066	0.018	0.005
1550	19.982	4.900	1.394	0.414	0.071	0.020	0.005
1600	21.249	5.215	1.488	0.443	0.076	0.021	0.005
1650	22.554	5.540	1.584	0.470	0.081	0.022	0.006
1700	23.896	5.875	1.684	0.499	0.087	0.024	0.006
1750	25.276	6.219	1.787	0.528	0.092	0.025	0.007
1800	26.694	6.573	1.893	0.557	0.098	0.027	0.007
1850	28.148	6.936	2.002	0.588	0.104	0.028	0.007
1900	29.640	7.310	2.114	0.619	0.110	0.030	0.008
1950	31.169	7.692	2.229	0.651	0.116	0.032	0.008
2000	32.736	8.085	2.348	0.684	0.122	0.033	0.009
2050	34.339	8.487	2.469	0.718	0.129	0.035	0.009
2100	35.979	8.898	2.594	0.753	0.136	0.037	0.010
2150	37.657	9.319	2.722	0.788	0.143	0.039	0.010
2200	39.371	9.750	2.853	0.824	0.150	0.040	0.011
2250	41.123	10.190	2.987	0.861	0.157	0.042	0.011
2300	42.911	10.640	3.125	0.899	0.165	0.044	0.012
2350	44.736	11.099	3.265	0.937	0.173	0.046	0.012
2400	46.597	11.568	3.409	0.977	0.180	0.048	0.013
2450	48.496	12.046	3.555	1.017	0.189	0.050	0.013
2500	50.431	12.534	3.705	1.058	0.197	0.052	0.014
2550	52.402	13.031	3.858	1.099	0.205	0.055	0.015
2600	54.410	13.538	4.015	1.142	0.214	0.057	0.015
2650	56.455	14.054	4.174	1.185	0.223	0.059	0.016
2700	58.536	14.580	4.337	1.229	0.232	0.061	0.016
2750	60.653	15.115	4.503	1.274	0.241	0.064	0.017
2800	62.807	15.660	4.672	1.319	0.251	0.066	0.018
2850	64.997	16.214	4.844	1.366	0.260	0.069	0.018
2900	67.224	16.777	5.019	1.413	0.270	0.071	0.019

TABLE A-31

Pressure drop in inches of water column per foot ("WC per foot) at given KBTU based on propane gas specific gravity of 1.52

Propane Gas Flow in KBTU	10A 3/8"	15A 1/2"	20A 3/4"	25A 1"	32A 1-1/4"	38A 1-1/2"	50A 2"
EHD	15	19	25	31	39	48	62
2950	69.486	17.351	5.198	1.461	0.280	0.074	0.020
3000	71.785	17.933	5.379	1.509	0.290	0.076	0.021
3050	74.120	18.525	5.564	1.559	0.301	0.079	0.021
3100	76.491	19.126	5.752	1.609	0.311	0.081	0.022
3150	78.899	19.737	5.944	1.660	0.322	0.084	0.023
3200	81.342	20.358	6.138	1.712	0.333	0.087	0.024
3250	83.821	20.987	6.336	1.764	0.344	0.090	0.024
3300	86.337	21.626	6.537	1.817	0.356	0.093	0.025
3350	88.888	22.275	6.741	1.872	0.367	0.096	0.026
3400	91.475	22.933	6.948	1.926	0.379	0.098	0.027
3450	94.098	23.600	7.159	1.982	0.391	0.101	0.028
3500	96.757	24.277	7.372	2.038	0.403	0.104	0.029
3550	99.452	24.963	7.589	2.096	0.416	0.108	0.029
3600		25.659	7.809	2.154	0.428	0.111	0.030
3650		26.364	8.033	2.212	0.441	0.114	0.031
3700		27.078	8.259	2.272	0.454	0.117	0.032
3750		27.802	8.489	2.332	0.467	0.120	0.033
3800		28.535	8.722	2.393	0.480	0.124	0.034
3850		29.277	8.959	2.455	0.494	0.127	0.035
3900		30.029	9.198	2.517	0.508	0.130	0.036
3950		30.790	9.441	2.581	0.522	0.134	0.037
4000		31.560	9.687	2.645	0.536	0.137	0.038
4050		32.340	9.936	2.710	0.550	0.141	0.039
4100		33.129	10.188	2.775	0.565	0.144	0.040
4150		33.928	10.444	2.842	0.580	0.148	0.041
4200		34.736	10.703	2.909	0.595	0.152	0.042
4250		35.553	10.965	2.977	0.610	0.155	0.043
4300		36.379	11.231	3.045	0.625	0.159	0.044
4350		37.215	11.499	3.115	0.641	0.163	0.045
4400		38.060	11.771	3.185	0.656	0.167	0.046
4450		38.915	12.046	3.256	0.672	0.171	0.048
4500		39.779	12.325	3.328	0.689	0.175	0.049
4550		40.652	12.606	3.400	0.705	0.179	0.050
4600		41.534	12.891	3.474	0.722	0.183	0.051
4650		42.426	13.179	3.548	0.738	0.187	0.052
4700		43.327	13.471	3.622	0.755	0.191	0.053
4750		44.237	13.765	3.698	0.773	0.195	0.055
4800		45.157	14.063	3.774	0.790	0.199	0.056
4850		46.085	14.364	3.851	0.808	0.204	0.057
4900		47.024	14.669	3.929	0.826	0.208	0.058
4950		47.971	14.976	4.008	0.844	0.212	0.060
5000		48.928	15.287	4.087	0.862	0.217	0.061
5100		50.869	15.919	4.248	0.899	0.226	0.064
5200		52.847	16.564	4.412	0.937	0.235	0.066

Propane Gas Flow in KBTU	10A 3/8"	15A 1/2"	20A 3/4"	25A 1"	32A 1-1/4"	38A 1-1/2"	50A 2"
EHD	15	19	25	31	39	48	62
5300		54.863	17.222	4.579	0.976	0.244	0.069
5400		56.915	17.892	4.749	1.015	0.254	0.072
5500		59.005	18.576	4.922	1.056	0.264	0.075
5600		61.131	19.274	5.098	1.097	0.273	0.078
5700		63.294	19.984	5.277	1.139	0.284	0.080
5800		65.495	20.707	5.459	1.182	0.294	0.084
5900		67.732	21.444	5.644	1.226	0.304	0.087
6000		70.006	22.194	5.832	1.271	0.315	0.090
6100		72.317	22.957	6.023	1.316	0.326	0.093
6200		74.665	23.733	6.217	1.363	0.337	0.096
6300		77.049	24.522	6.414	1.410	0.348	0.100
6400		79.471	25.324	6.614	1.458	0.359	0.103
6500		81.929	26.140	6.817	1.507	0.371	0.106
6600		84.424	26.969	7.023	1.557	0.383	0.110
6700		86.956	27.811	7.232	1.608	0.395	0.113
6800		89.524	28.666	7.444	1.659	0.407	0.117
6900		92.129	29.535	7.659	1.712	0.419	0.121
7000		94.771	30.417	7.877	1.765	0.432	0.124
7100		97.450	31.312	8.098	1.819	0.445	0.128
7200			32.220	8.322	1.874	0.457	0.132
7300			33.142	8.549	1.930	0.471	0.136
7400			34.077	8.779	1.987	0.484	0.140
7500			35.025	9.011	2.044	0.497	0.144
7750			37.454	9.607	2.192	0.532	0.154
8000			39.965	10.220	2.346	0.568	0.165
8250			42.561	10.852	2.504	0.605	0.176
8500			45.240	11.503	2.669	0.643	0.188
8750			48.002	12.172	2.839	0.682	0.200
9000			50.848	12.859	3.014	0.722	0.212
9250			53.778	13.565	3.196	0.764	0.225
9500			56.792	14.289	3.382	0.807	0.238
9750			59.890	15.031	3.575	0.851	0.251
10000			63.071	15.792	3.773	0.896	0.265
10500			69.688	17.369	4.186	0.990	0.294
11000			76.642	19.018	4.622	1.089	0.325
11500			83.934	20.740	5.081	1.193	0.357
12000			91.565	22.535	5.563	1.302	0.391
12500			99.536	24.402	6.069	1.415	0.426
13000				26.342	6.598	1.534	0.463
13500				28.354	7.150	1.657	0.501
14000				30.438	7.726	1.785	0.542
14500				32.594	8.317	1.918	0.583
15000				34.822	8.923	2.056	0.627

SCHEDULE 40 BLACK IRON PIPE Pressure Drop per Foot Propane Gas

TABLE A-32

Pressure drop in inches of water column per foot ("WC per foot) at given KBTU
based on propane gas specific gravity of 1.52
Calculations based on NFPA 54 Low Pressure Gas Formula

Natural Gas Flow in CFH	1/2	3/4	1	1-1/4	1-1/2	2	2-1/2	3	3-1/2	4
10	0.000	0.000	0.000	0.000	0.000	0.000	0.000	0.000	0.000	0.000
20	0.000	0.000	0.000	0.000	0.000	0.000	0.000	0.000	0.000	0.000
30	0.001	0.000	0.000	0.000	0.000	0.000	0.000	0.000	0.000	0.000
40	0.001	0.000	0.000	0.000	0.000	0.000	0.000	0.000	0.000	0.000
50	0.002	0.000	0.000	0.000	0.000	0.000	0.000	0.000	0.000	0.000
60	0.003	0.001	0.000	0.000	0.000	0.000	0.000	0.000	0.000	0.000
70	0.004	0.001	0.000	0.000	0.000	0.000	0.000	0.000	0.000	0.000
80	0.005	0.001	0.000	0.000	0.000	0.000	0.000	0.000	0.000	0.000
90	0.006	0.001	0.000	0.000	0.000	0.000	0.000	0.000	0.000	0.000
100	0.007	0.002	0.001	0.000	0.000	0.000	0.000	0.000	0.000	0.000
110	0.008	0.002	0.001	0.000	0.000	0.000	0.000	0.000	0.000	0.000
120	0.010	0.002	0.001	0.000	0.000	0.000	0.000	0.000	0.000	0.000
130	0.011	0.003	0.001	0.000	0.000	0.000	0.000	0.000	0.000	0.000
140	0.013	0.003	0.001	0.000	0.000	0.000	0.000	0.000	0.000	0.000
150	0.015	0.004	0.001	0.000	0.000	0.000	0.000	0.000	0.000	0.000
160	0.016	0.004	0.001	0.000	0.000	0.000	0.000	0.000	0.000	0.000
170	0.018	0.005	0.001	0.000	0.000	0.000	0.000	0.000	0.000	0.000
180	0.020	0.005	0.002	0.000	0.000	0.000	0.000	0.000	0.000	0.000
190	0.023	0.006	0.002	0.000	0.000	0.000	0.000	0.000	0.000	0.000
200	0.025	0.006	0.002	0.001	0.000	0.000	0.000	0.000	0.000	0.000
225	0.031	0.008	0.002	0.001	0.000	0.000	0.000	0.000	0.000	0.000
250	0.037	0.010	0.003	0.001	0.000	0.000	0.000	0.000	0.000	0.000
275	0.045	0.011	0.004	0.001	0.000	0.000	0.000	0.000	0.000	0.000
300	0.053	0.013	0.004	0.001	0.001	0.000	0.000	0.000	0.000	0.000
325	0.061	0.016	0.005	0.001	0.001	0.000	0.000	0.000	0.000	0.000
350	0.070	0.018	0.006	0.001	0.001	0.000	0.000	0.000	0.000	0.000
375	0.079	0.020	0.006	0.002	0.001	0.000	0.000	0.000	0.000	0.000
400	0.089	0.023	0.007	0.002	0.001	0.000	0.000	0.000	0.000	0.000
425	0.100	0.026	0.008	0.002	0.001	0.000	0.000	0.000	0.000	0.000
450	0.111	0.028	0.009	0.002	0.001	0.000	0.000	0.000	0.000	0.000
475	0.123	0.031	0.010	0.003	0.001	0.000	0.000	0.000	0.000	0.000
500	0.135	0.035	0.011	0.003	0.001	0.000	0.000	0.000	0.000	0.000
525	0.148	0.038	0.012	0.003	0.001	0.000	0.000	0.000	0.000	0.000
550	0.161	0.041	0.013	0.003	0.002	0.000	0.000	0.000	0.000	0.000
575	0.175	0.045	0.014	0.004	0.002	0.001	0.000	0.000	0.000	0.000
600	0.189	0.048	0.015	0.004	0.002	0.001	0.000	0.000	0.000	0.000
625	0.204	0.052	0.016	0.004	0.002	0.001	0.000	0.000	0.000	0.000
650	0.219	0.056	0.017	0.005	0.002	0.001	0.000	0.000	0.000	0.000
675	0.235	0.060	0.019	0.005	0.002	0.001	0.000	0.000	0.000	0.000
700	0.251	0.064	0.020	0.005	0.002	0.001	0.000	0.000	0.000	0.000
725	0.268	0.069	0.021	0.006	0.003	0.001	0.000	0.000	0.000	0.000
750	0.286	0.073	0.023	0.006	0.003	0.001	0.000	0.000	0.000	0.000
775	0.303	0.078	0.024	0.006	0.003	0.001	0.000	0.000	0.000	0.000
800	0.322	0.082	0.026	0.007	0.003	0.001	0.000	0.000	0.000	0.000
825	0.341	0.087	0.027	0.007	0.003	0.001	0.000	0.000	0.000	0.000

Natural Gas Flow in CFH	1/2	3/4	1	1-1/4	1-1/2	2	2-1/2	3	3-1/2	4
850	0.360	0.092	0.029	0.008	0.004	0.001	0.000	0.000	0.000	0.000
875	0.380	0.097	0.030	0.008	0.004	0.001	0.000	0.000	0.000	0.000
900	0.400	0.102	0.032	0.008	0.004	0.001	0.001	0.000	0.000	0.000
925	0.421	0.108	0.033	0.009	0.004	0.001	0.001	0.000	0.000	0.000
950	0.442	0.113	0.035	0.009	0.004	0.001	0.001	0.000	0.000	0.000
975	0.464	0.119	0.037	0.010	0.005	0.001	0.001	0.000	0.000	0.000
1000	0.486	0.124	0.039	0.010	0.005	0.001	0.001	0.000	0.000	0.000
1050	0.532	0.136	0.042	0.011	0.005	0.002	0.001	0.000	0.000	0.000
1100	0.580	0.148	0.046	0.012	0.006	0.002	0.001	0.000	0.000	0.000
1150	0.629	0.161	0.050	0.013	0.006	0.002	0.001	0.000	0.000	0.000
1200	0.681	0.174	0.054	0.014	0.007	0.002	0.001	0.000	0.000	0.000
1250	0.734	0.188	0.058	0.015	0.007	0.002	0.001	0.000	0.000	0.000
1300	0.789	0.202	0.063	0.017	0.008	0.002	0.001	0.000	0.000	0.000
1350	0.846	0.216	0.067	0.018	0.008	0.003	0.001	0.000	0.000	0.000
1400	0.905	0.232	0.072	0.019	0.009	0.003	0.001	0.000	0.000	0.000
1450	0.966	0.247	0.077	0.020	0.010	0.003	0.001	0.000	0.000	0.000
1500	1.028	0.263	0.082	0.022	0.010	0.003	0.001	0.000	0.000	0.000
1550	1.093	0.279	0.087	0.023	0.011	0.003	0.001	0.000	0.000	0.000
1600	1.159	0.296	0.092	0.024	0.012	0.003	0.001	0.001	0.000	0.000
1650	1.226	0.314	0.097	0.026	0.012	0.004	0.002	0.001	0.000	0.000
1700	1.296	0.331	0.103	0.027	0.013	0.004	0.002	0.001	0.000	0.000
1750	1.367	0.350	0.108	0.029	0.014	0.004	0.002	0.001	0.000	0.000
1800	1.441	0.368	0.114	0.030	0.014	0.004	0.002	0.001	0.000	0.000
1850	1.515	0.388	0.120	0.032	0.015	0.004	0.002	0.001	0.000	0.000
1900	1.592	0.407	0.126	0.033	0.016	0.005	0.002	0.001	0.000	0.000
1950	1.670	0.427	0.133	0.035	0.017	0.005	0.002	0.001	0.000	0.000
2000	1.750	0.448	0.139	0.037	0.017	0.005	0.002	0.001	0.000	0.000
2050	1.832	0.469	0.145	0.038	0.018	0.005	0.002	0.001	0.000	0.000
2100	1.915	0.490	0.152	0.040	0.019	0.006	0.002	0.001	0.000	0.000
2150	2.001	0.512	0.159	0.042	0.020	0.006	0.003	0.001	0.000	0.000
2200	2.087	0.534	0.166	0.044	0.021	0.006	0.003	0.001	0.000	0.000
2250	2.176	0.557	0.173	0.046	0.022	0.006	0.003	0.001	0.000	0.000
2300	2.266	0.580	0.180	0.048	0.023	0.007	0.003	0.001	0.000	0.000
2350	2.358	0.603	0.187	0.049	0.023	0.007	0.003	0.001	0.001	0.000
2400	2.452	0.627	0.195	0.051	0.024	0.007	0.003	0.001	0.001	0.000
2450	2.547	0.651	0.202	0.053	0.025	0.008	0.003	0.001	0.001	0.000
2500	2.644	0.676	0.210	0.055	0.026	0.008	0.003	0.001	0.001	0.000
2550	2.742	0.701	0.218	0.058	0.027	0.008	0.003	0.001	0.001	0.000
2600	2.843	0.727	0.226	0.060	0.028	0.008	0.004	0.001	0.001	0.000
2650	2.944	0.753	0.234	0.062	0.029	0.009	0.004	0.001	0.001	0.000
2700	3.048	0.780	0.242	0.064	0.030	0.009	0.004	0.001	0.001	0.000
2750	3.153	0.806	0.250	0.066	0.031	0.009	0.004	0.001	0.001	0.000
2800	3.260	0.834	0.259	0.068	0.032	0.010	0.004	0.001	0.001	0.000
2850	3.368	0.861	0.267	0.071	0.033	0.010	0.004	0.001	0.001	0.000
2900	3.478	0.890	0.276	0.073	0.035	0.010	0.004	0.002	0.001	0.000

SCHEDULE 40 BLACK IRON PIPE Pressure Drop per Foot Propane Gas

TABLE A-32

Pressure drop in inches of water column per foot ("WC per foot) at given KBTU
based on propane gas specific gravity of 1.52
Calculations based on NFPA 54 Low Pressure Gas Formula

Natural Gas Flow in CFH	1/2	3/4	1	1-1/4	1-1/2	2	2-1/2	3	3-1/2	4
2950	3.590	0.918	0.285	0.075	0.036	0.011	0.004	0.002	0.001	0.000
3000	3.703	0.947	0.294	0.078	0.037	0.011	0.005	0.002	0.001	0.000
3050	3.818	0.977	0.303	0.080	0.038	0.011	0.005	0.002	0.001	0.000
3100	3.935	1.006	0.312	0.083	0.039	0.012	0.005	0.002	0.001	0.000
3150	4.053	1.037	0.322	0.085	0.040	0.012	0.005	0.002	0.001	0.000
3200	4.173	1.067	0.331	0.088	0.041	0.012	0.005	0.002	0.001	0.000
3250	4.294	1.098	0.341	0.090	0.043	0.013	0.005	0.002	0.001	0.001
3300	4.417	1.130	0.350	0.093	0.044	0.013	0.006	0.002	0.001	0.001
3350	4.541	1.161	0.360	0.095	0.045	0.013	0.006	0.002	0.001	0.001
3400	4.667	1.194	0.370	0.098	0.046	0.014	0.006	0.002	0.001	0.001
3450	4.795	1.226	0.380	0.101	0.048	0.014	0.006	0.002	0.001	0.001
3500	4.924	1.259	0.391	0.103	0.049	0.015	0.006	0.002	0.001	0.001
3550	5.055	1.293	0.401	0.106	0.050	0.015	0.006	0.002	0.001	0.001
3600	5.187	1.327	0.412	0.109	0.052	0.015	0.006	0.002	0.001	0.001
3650	5.321	1.361	0.422	0.112	0.053	0.016	0.007	0.002	0.001	0.001
3700	5.457	1.396	0.433	0.115	0.054	0.016	0.007	0.002	0.001	0.001
3750	5.594	1.431	0.444	0.117	0.056	0.017	0.007	0.002	0.001	0.001
3800	5.733	1.466	0.455	0.120	0.057	0.017	0.007	0.003	0.001	0.001
3850	5.873	1.502	0.466	0.123	0.058	0.017	0.007	0.003	0.001	0.001
3900	6.015	1.538	0.477	0.126	0.060	0.018	0.008	0.003	0.001	0.001
3950	6.158	1.575	0.489	0.129	0.061	0.018	0.008	0.003	0.001	0.001
4000	6.303	1.612	0.500	0.132	0.063	0.019	0.008	0.003	0.001	0.001
4050	6.449	1.649	0.512	0.135	0.064	0.019	0.008	0.003	0.001	0.001
4100	6.597	1.687	0.523	0.138	0.066	0.020	0.008	0.003	0.001	0.001
4150	6.747	1.725	0.535	0.142	0.067	0.020	0.008	0.003	0.001	0.001
4200	6.898	1.764	0.547	0.145	0.069	0.020	0.009	0.003	0.001	0.001
4250	7.050	1.803	0.559	0.148	0.070	0.021	0.009	0.003	0.002	0.001
4300	7.204	1.843	0.572	0.151	0.072	0.021	0.009	0.003	0.002	0.001
4350	7.360	1.882	0.584	0.154	0.073	0.022	0.009	0.003	0.002	0.001
4400	7.517	1.923	0.596	0.158	0.075	0.022	0.009	0.003	0.002	0.001
4450	7.676	1.963	0.609	0.161	0.076	0.023	0.010	0.003	0.002	0.001
4500	7.836	2.004	0.622	0.164	0.078	0.023	0.010	0.003	0.002	0.001
4550	7.997	2.045	0.634	0.168	0.080	0.024	0.010	0.003	0.002	0.001
4600	8.161	2.087	0.647	0.171	0.081	0.024	0.010	0.004	0.002	0.001
4650	8.325	2.129	0.661	0.175	0.083	0.025	0.010	0.004	0.002	0.001
4700	8.492	2.172	0.674	0.178	0.084	0.025	0.011	0.004	0.002	0.001
4750	8.659	2.215	0.687	0.182	0.086	0.026	0.011	0.004	0.002	0.001
4800	8.829	2.258	0.700	0.185	0.088	0.026	0.011	0.004	0.002	0.001
4850	8.999	2.302	0.714	0.189	0.089	0.027	0.011	0.004	0.002	0.001
4900	9.172	2.346	0.728	0.193	0.091	0.027	0.011	0.004	0.002	0.001
4950	9.345	2.390	0.741	0.196	0.093	0.028	0.012	0.004	0.002	0.001
5000	9.521	2.435	0.755	0.200	0.095	0.028	0.012	0.004	0.002	0.001
5100	9.875	2.526	0.783	0.207	0.098	0.029	0.012	0.004	0.002	0.001
5200	10.236	2.618	0.812	0.215	0.102	0.030	0.013	0.004	0.002	0.001

Natural Gas Flow in CFH	1/2	3/4	1	1-1/4	1-1/2	2	2-1/2	3	3-1/2	4
5300	10.603	2.712	0.841	0.223	0.105	0.031	0.013	0.005	0.002	0.001
5400	10.976	2.807	0.871	0.230	0.109	0.032	0.014	0.005	0.002	0.001
5500	11.355	2.904	0.901	0.238	0.113	0.034	0.014	0.005	0.002	0.001
5600	11.739	3.002	0.931	0.246	0.117	0.035	0.015	0.005	0.003	0.001
5700	12.130	3.102	0.962	0.255	0.121	0.036	0.015	0.005	0.003	0.001
5800	12.526	3.204	0.994	0.263	0.125	0.037	0.016	0.005	0.003	0.001
5900	12.928	3.306	1.026	0.271	0.129	0.038	0.016	0.006	0.003	0.002
6000	13.336	3.411	1.058	0.280	0.133	0.039	0.017	0.006	0.003	0.002
6100	13.750	3.517	1.091	0.289	0.137	0.041	0.017	0.006	0.003	0.002
6200	14.169	3.624	1.124	0.297	0.141	0.042	0.018	0.006	0.003	0.002
6300		3.733	1.158	0.306	0.145	0.043	0.018	0.006	0.003	0.002
6400		3.843	1.192	0.315	0.149	0.044	0.019	0.007	0.003	0.002
6500		3.955	1.227	0.325	0.154	0.046	0.019	0.007	0.003	0.002
6600		4.068	1.262	0.334	0.158	0.047	0.020	0.007	0.003	0.002
6700		4.182	1.297	0.343	0.163	0.048	0.020	0.007	0.004	0.002
6800		4.299	1.333	0.353	0.167	0.050	0.021	0.007	0.004	0.002
6900		4.416	1.370	0.362	0.172	0.051	0.022	0.008	0.004	0.002
7000		4.535	1.407	0.372	0.176	0.052	0.022	0.008	0.004	0.002
7100		4.656	1.444	0.382	0.181	0.054	0.023	0.008	0.004	0.002
7200		4.778	1.482	0.392	0.186	0.055	0.023	0.008	0.004	0.002
7300		4.901	1.520	0.402	0.190	0.057	0.024	0.008	0.004	0.002
7400		5.026	1.559	0.412	0.195	0.058	0.025	0.009	0.004	0.002
7500		5.152	1.598	0.423	0.200	0.060	0.025	0.009	0.004	0.002
7750		5.474	1.698	0.449	0.213	0.063	0.027	0.009	0.005	0.003
8000		5.805	1.801	0.476	0.226	0.067	0.028	0.010	0.005	0.003
8250		6.145	1.906	0.504	0.239	0.071	0.030	0.010	0.005	0.003
8500		6.493	2.014	0.533	0.252	0.075	0.032	0.011	0.005	0.003
8750		6.851	2.125	0.562	0.266	0.079	0.033	0.012	0.006	0.003
9000		7.217	2.239	0.592	0.281	0.084	0.035	0.012	0.006	0.003
9250		7.592	2.355	0.623	0.295	0.088	0.037	0.013	0.006	0.003
9500		7.975	2.474	0.655	0.310	0.092	0.039	0.014	0.007	0.004
9750		8.368	2.596	0.687	0.325	0.097	0.041	0.014	0.007	0.004
10000		8.768	2.720	0.720	0.341	0.101	0.043	0.015	0.007	0.004
10500		9.596	2.977	0.788	0.373	0.111	0.047	0.016	0.008	0.004
11000		10.458	3.244	0.858	0.406	0.121	0.051	0.018	0.009	0.005
11500		11.353	3.522	0.932	0.441	0.131	0.056	0.019	0.010	0.005
12000		12.282	3.810	1.008	0.477	0.142	0.060	0.021	0.010	0.006
12500		13.245	4.109	1.087	0.515	0.153	0.065	0.023	0.011	0.006
13000		14.241	4.418	1.169	0.554	0.165	0.070	0.024	0.012	0.007
13500			4.737	1.253	0.594	0.177	0.075	0.026	0.013	0.007
14000			5.066	1.340	0.635	0.189	0.080	0.028	0.014	0.007
14500			5.406	1.430	0.677	0.202	0.085	0.030	0.015	0.008
15000			5.755	1.523	0.721	0.215	0.091	0.032	0.016	0.008

8.1 DEFINITION OF TERMINOLOGY IN THIS GUIDE

AGA - American Gas Association

ANSI - American National Standards Institute

ANSI LC 1/CSA 6.26 - Fuel Gas Piping Systems Using Corrugated Stainless Steel Tubing (CSST)

ANSI Z223.1 - Edition of the National Fuel Gas Code published by American National Standards Institute. Also known as NFPA 54 (National Fire Protection Association - pamphlet 54).

ASTM - American Society for Testing and Materials

Appliance - Any device which utilizes gas as a fuel or raw material to produce light, heat, power, refrigeration or air conditioning.

ASME - American Society of Mechanical Engineers

Authority Having Jurisdiction - The organization, office or individual responsible for approving equipment, installations, or procedures.

BTU - Abbreviation for British Thermal Unit, which is the quantity of heat required to raise the temperature of one pound of water one degree Fahrenheit.

CFH - Gas flow rate stated in cubic feet per hour. A CFH of natural gas typically contains 1000 BTU's and LPG typically contains 2500 BTU's.

CGA - Canadian Gas Association

CAN/CGA - B149.1 - Natural Gas Installation code - most current edition

CAN/CGA - B149.2 - Propane Installation code - most current edition

CSA - Canadian Standards Association

CSST - Corrugated stainless steel tubing.

Delivery Pressure - Gas pressure available after the gas meter.

Design Pressure - The maximum permitted operating pressure.

Drip Leg - The container (dirt trap pocket) placed at the lowest point in a system of piping to collect foreign materials and condensate. The container must be accessible for cleanout.

EHD - Equivalent Hydraulic Diameter. A measure of the relative hydraulic efficiency between different tubing sizes. The larger the value of EHD, the greater the flow capacity.

Elevated Pressure System - Term for any pressure above 1/2 PSIG, but less than 5 PSIG.

Full Lockup Regulator - Specifically designed regulator capable of stopping gas flow if the load goes to zero, thus, preventing the downstream from increasing more than 2"(in.) WC pressure above the set point.

Joint - A connection between two lengths of tubing or a length of tubing and fitting.

Joint Compound - Non-hardening material used on pipe threads to ensure a seal.

Load - The amount of gas required by an appliance, or group of appliances, per their manufacturers rating. (See definition of CFH)

Manifold - A fitting to which a number of branch lines are connected.

Meter - An instrument installed to measure the volume of gas delivered through a piping system.

NFPA - National Fire Protection Agency

Piping - As used in this guide, either pipe or tubing or both.

A. Pipe - Rigid conduit of iron, steel, copper, brass or aluminum.
B. Tubing - Semirigid conduit of corrugated stainless steel (CSST).

Pressure - Unless otherwise stated, is expressed in pounds per square inch above atmospheric pressure, i.e., gauge pressure (PSIG).

Pressure Drop - The loss in gas pressure due to friction or obstruction in tubing, valves, fittings, regulators and burners.

Pressure Regulator - A valve which reduces and maintains pressure. It automatically opens and closes in response to changing pressure conditions in the downstream piping.

PSIG - Pounds per square inch, gauge. The pressure as read from a measurement gauge or device. Gauge pressure is pressure above atmospheric pressure and is sometimes simply referred to as PSI.

Purge - To completely displace an existing gas with a new gas.

Regulator, Gas Appliance Pressure - A device for controlling and maintaining a uniform pressure to the manifold of gas burning equipment.

Regulator, Line Gas Pressure - A device installed between the service pressure regulator and the gas appliance regulator for controlling, maintaining or reducing the pressure in that portion of the piping system downstream of the device. This device is used in elevated pressure systems and is simply referred to as a pressure regulator in this guide.

Regulator, Service Pressure - A device installed by the serving gas supplier to reduce and limit the service line gas pressure to delivery pressure.

Regulator Vent - The opening in the atmospheric side of the regulator housing, permitting the in and out movement of air to compensate for the movement of the regulator diaphragm.

Specific Gravity - Applied to a gas it is the ratio of the weight of a given volume to that of the same volume of air, both measured under the same conditions.

Tubing - ASTM A240 Type 304 annular corrugated stainless steel tubing, which is bendable and comes in 50, 100, 180, 250, 500 and 1,000 foot coils depending on the diameter.

Valve - A device used to shut-off gas flow to the system.

Vent Limiting Device - A valve that limits the discharge of gas from a regulator in the event of a diaphragm rupture. Gas discharge is limited to an ANSI approved level.

Water Column, Inches (in. WC) - A method of stating pressure measured in inches of water column by a manometer or pressure gauge. Commonly used in the gas industry when the pressure is less than 1 PSIG. Approximate conversion between PSIG and in. WC:

1 PSIG = 28 in. WC
1/2 PSIG = 14 in. WC
1/4 PSIG = 7 in. WC

- Specific Gravity Factor
- Pressure Drop Curves for Corrugated Tubing Fittings
- Equivalent Lengths Factor for Fittings and Valves

Specific Gravity Correction Factor

Gas piping systems that are to be supplied with gas of a specific gravity other than 0.60 shall apply a specific gravity factor.

Such application is accomplished by multiplying the capacities given in Tables A-1 through A-13 and Table A-29 by the appropriate multiplier from Table A-28. In case the exact specific gravity does not appear in the table, choose the next higher value specific gravity shown.

Table A-33 Multipliers to be Used with Tables A-1 through A-27 and Table A-34

SPECIFIC GRAVITY	MULTIPLIER	SPECIFIC GRAVITY	MULTIPLIER
0.35	1.31	1.00	0.78
0.40	1.23	1.10	0.74
0.45	1.16	1.20	0.71
0.50	1.10	1.30	0.68
0.55	1.04	1.40	0.66
0.60	1.00	1.50	0.63
0.65	0.96	1.60	0.61
0.70	0.93	1.70	0.59
0.75	0.90	1.80	0.58
0.80	0.87	1.90	0.56
0.85	0.84	2.00	0.55
0.90	0.82	2.10	0.54

Table A-34 Natural Gas Flow in CFH

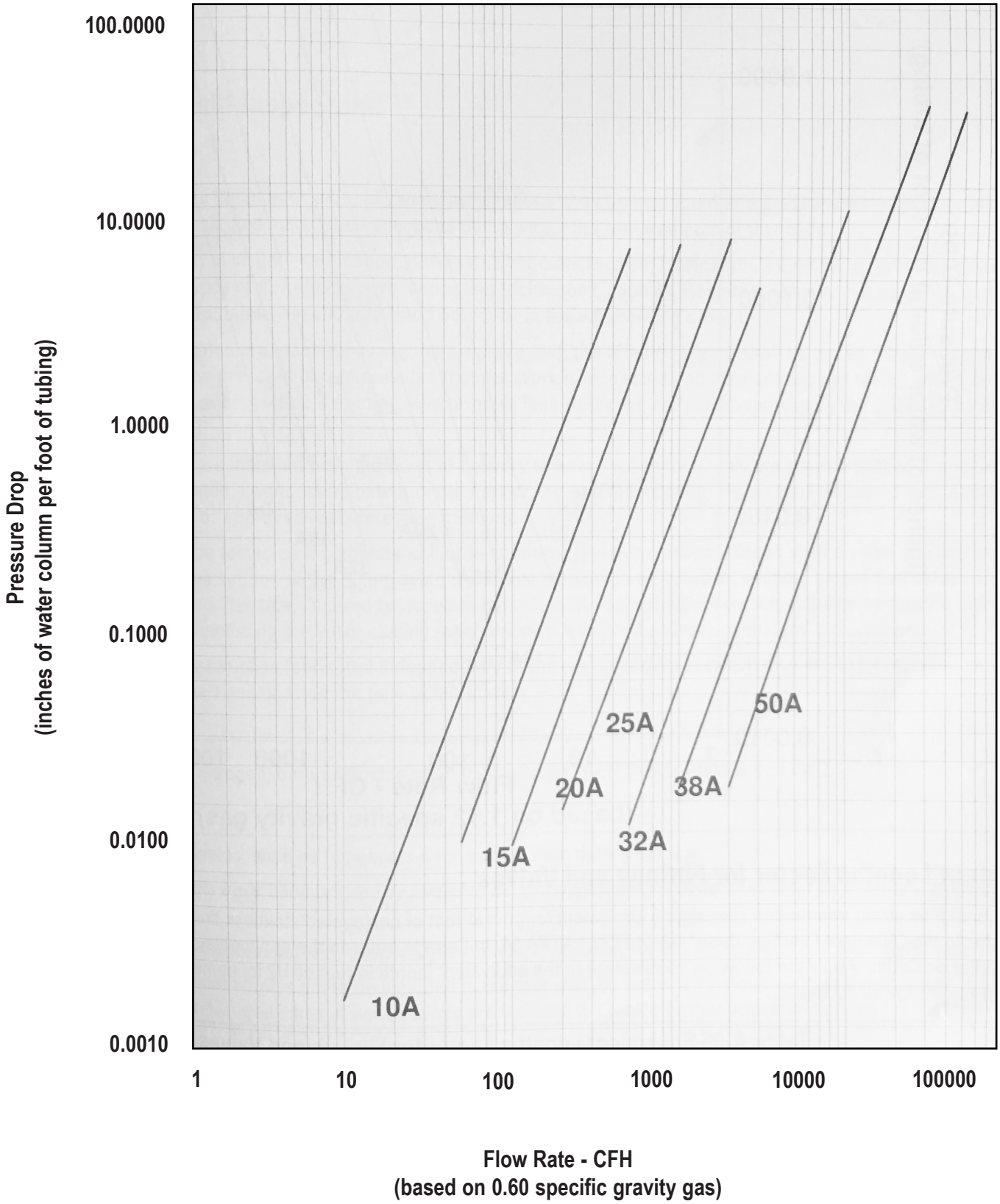

Table A-35 Propane Flow in CFH

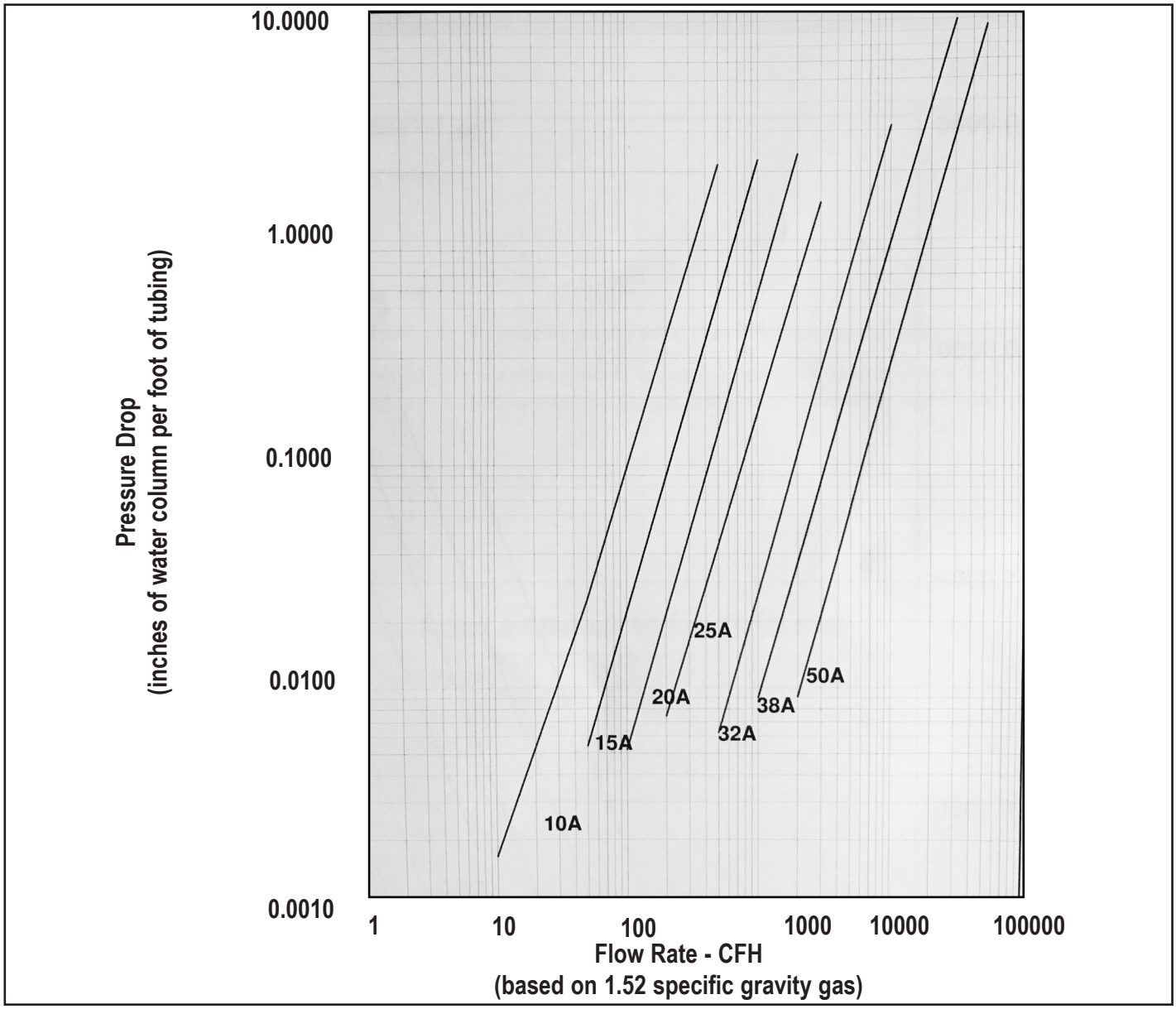

Equivalent Lengths Factor for Fittings and Valves

For additional pipe sizing information concerning equivalent lengths in feet of corrugated stainless steel tubing for fittings and valves refer to the "National Fuel Gas Code" ANSI Z223.1 NFPA 54. In Canada, refer to the applicable sections of the CAN/CGA B149 Installation Codes. Apply the following coefficients to the equivalent length in feet of 1/2 in. nominal schedule 40 straight pipe to convert to corrugated tubing.

Table A-36 Equivalent Lengths Factor for Fittings and Valves
10A Tubing L2[1] = L1[2] (0.08)n[3]
15A Tubing L2 = L1 (0.4)n
25A, 32A , 38A, 50A Tubing L2 = L1 (6.0)n
[1] L1 = Length in feet of 1/2 in. schedule 40 (standard weight) straight pipe.
[2] L2 = Equivalent length in feet of 10A/15, 15A/19, 20A/25, 25A/31, 32A/39, 38A/48 or 50A/62 tubing for fittings and valves.
[3] n = Number of fittings or valves.

CHAPTER 8 "INSPECTION, TESTING AND PURGING" OF THE NATIONAL GAS CODE, NFPA 54, ANSI Z223.1 In CANADA, refer to the applicable sections of the CAN/CGA B149 Installation codes.

National Fuel Gas Code

8.1 Pressure Testing and Inspection

8.1.1* General.

8.1.1.1 Prior to acceptance and initial operation, all piping installations shall be visually inspected and pressure tested to determine that the materials, design, fabrication, and installation practices comply with the requirements of this code.

8.1.1.2 Inspection shall consist of visual examination, during or after manufacture, fabrication, assembly, or pressure tests.

8.1.1.3 Where repairs or additions are made following the pressure test, the affected piping shall be tested. Minor repairs and additions are not required to be pressure tested, provided that the work is inspected and connections are tested with a noncorrosive leak-detecting fluid or other leak-detecting methods approved by the authority having jurisdiction.

8.1.1.4 Where new branches are installed to new appliance(s), only the newly installed branch(es) shall be required to be pressure tested. Connections between the new piping and the existing piping shall be tested with a noncorrosive leak-detecting fluid or approved leak-detecting methods.

8.1.1.5 Apiping system shall be tested as a complete unit or in sections. Under no circumstances shall a valve in a line be used as a bulkhead between gas in one section of the piping system and test medium in an adjacent section, unless a double block and bleed valve system is installed. A valve shall not be subjected to the test pressure unless it can be determined that the valve, including the valve closing mechanism, is designed to safely withstand the pressure.

8.1.1.6 Regulator and valve assemblies fabricated independently of the piping system in which they are to be installed shall be permitted to be tested with inert gas or air at the time of fabrication.

8.1.1.7* Prior to testing, the interior of the pipe shall be cleared of all foreign material.

8.1.2 Test Medium. The test medium shall be air, nitrogen, carbon dioxide, or an inert gas. OXYGEN SHALL NEVER BE USED.

8.1.3 Test Preparation

8.1.3.1 Pipe joints, including welds, shall be left exposed for examination during the test.
Exception: Covered or concealed pipe end joints that have been previously tested in accordance with this code.

8.1.3.2 Expansion joints shall be provided with temporary restraints, if required, for the additional thrust load under test.

8.1.3.3 Appliances and equipment that are not to be included in the test shall be either disconnected from the piping or isolated by blanks, blind flanges, or caps. Flanged joints at which blinds are inserted to blank off other equipment during the test shall not be required to be tested.

8.1.3.4 Where the piping system is connected to appliances or equipment designed for operating pressures of less than the test pressure, such appliances or equipment shall be isolated from the piping system by disconnecting them and capping the outlet(s).

8.1.3.5 Where the piping system is connected to appliances or equipment designed for operating pressures equal to or greater than the test pressure, such appliances or equipment shall be isolated from the piping system by closing the individual appliance or equipment shutoff valve(s).

8.1.3.6 All testing of piping systems shall be performed in a manner that protects the safety of employees and the public during the test.

8.1.4 Test Pressure.

8.1.4.1 Test pressure shall be measured with a manometer or with a pressure measuring device designed and calibrated to read, record, or indicate a pressure loss due to leakage during the pressure test period. The source of pressure shall be isolated before the pressure tests are made. Mechanical gauges used to measure test pressures shall have a range such that the highest end of the scale is not greater than 5 times the test pressure.

8.1.4.2 The test pressure to be used shall be no less than 1⁄2 times the proposed maximum working pressure, but not less than 3 psi (20 kPa), irrespective of design pressure. Where the test pressure exceeds 125 psi (862 kPa), the test pressure shall not exceed a value that produces a hoop stress in the piping greater than 50 percent of the specified minimum yield strength of the pipe.

8.1.4.3* Test duration shall be not less than 1⁄2 hour for each 500 ft3 (14 m3) of pipe volume or fraction thereof. When testing a system having a volume less than 10 ft3 (0.28 m3) or a system in a single-family dwelling, the test duration shall be a minimum of 10 minutes. The duration of the test shall not be required to exceed 24 hours.

8.1.5 Detection of Leaks and Defects.

8.1.5.1 The piping system shall withstand the test pressure specified without showing any evidence of leakage or other defects. Any reduction of test pressures as indicated by pressure gauges shall be deemed to indicate the presence of a leak unless such reduction can be readily attributed to some other cause.

8.1.5.2 The leakage shall be located by means of an approved gas detector, a noncorrosive leak detection fluid, or other approved leak detection methods.

8.1.5.3 Where leakage or other defects are located, the affected portion of the piping system shall be repaired or replaced and retested.

8.2 Piping System Leak Check.

8.2.1 Test Gases. Leak checks using fuel gas shall be permitted in piping systems that have been pressure tested in accordance with Section 8.1.

8.2.2 Turning Gas On. During the process of turning gas on into a system of new gas piping, the entire system shall be inspected to determine that there are no open fittings or ends and that all valves at unused outlets are closed and plugged or capped.

8.2 Piping System Leak Check.

8.2.1 Test Gases. Leak checks using fuel gas shall be permitted in piping systems that have been pressure tested in accordance with Section 8.1.

8.2.2 Turning Gas On. During the process of turning gas on into a system of new gas piping, the entire system shall be inspected to determine that there are no open fittings or ends and that all valves at unused outlets are closed and plugged or capped.

8.2.3* Leak Check. Immediately after the gas is turned on into a new system or into a system that has been initially restored after an interruption of service, the piping system shall be checked for leakage. Where leakage is indicated, the gas supply shall be shut off until the necessary repairs have been made.

8.2.4 Placing Appliances and Equipment in Operation. Appliances and equipment shall not be placed in operation until after the piping system has been checked for leakage in accordance with 8.2.3, the piping system is purged in accordance with 8.3, and connections to the appliance are checked for leakage.

8.3* Purging Requirements. The purging of piping shall be in accordance with 8.3.1 through 8.3.3.

8.3.1* Piping Systems Required to Be Purged Outdoors. The purging of piping systems shall be in accordance with 8.3.1.1 through 8.3.1.4 where the piping system meets either of the following:
(1) The design operating gas pressure is greater than 2 psig (14 kPag).
(2) The piping being purged contains one or more sections of pipe or tubing meeting the size and length criteria of Table 8.3.1.

8.3.1.1 Removal from Service. Where existing gas piping is opened, the section that is opened shall be isolated from the gas supply and the line pressure vented in accordance with 8.3.1.3. Where gas piping meeting the criteria of Table 8.3.1 is removed from service, the residual fuel gas in the piping shall be displaced with an inert gas.

Table 8.3.1 Size and Length of Piping*

Normal Pipe Size (in.)	Length of Piping (ft)
≥ 2 ½ < 3	>50
≥ 3 < 4	>30
≥ 4 < 6	>15
≥ 6 < 8	>10
≥ 8	Any length

8.3.1.2* Placing in Operation. Where gas piping containing air and meeting the criteria of Table 8.3.1 is placed in operation, the air in the piping shall first be displaced with an inert gas. The inert gas shall then be displaced with fuel gas in accordance with 8.3.1.3.

8.3.1.3 Outdoor Discharge of Purged Gases. The open end of a piping system being pressure vented or purged shall discharge directly to an outdoor location. Purging operations shall comply with all of the following requirements:

(1) The point of discharge shall be controlled with a shut off valve.

(2) The point of discharge shall be located at least 10 ft (3.0 m) from sources of ignition, at least 10 ft (3.0 m) from building openings and at least 25 ft (7.6 m) from mechanical air intake openings.

(3) During discharge, the open point of discharge shall be continuously attended and monitored with a combustible gas indicator that complies with 8.3.1.4.

(4) Purging operations introducing fuel gas shall be stopped when 90 percent fuel gas by volume is detected within the pipe.

(5) Persons not involved in the purging operations shall be evacuated from all areas within 10 ft (3.0 m) of the point of discharge.

8.3.1.4* Combustible Gas Indicator. Combustible gas indicators shall be listed and calibrated in accordance with the manufacturer's instructions. Combustible gas indicators shall numerically display a volume scale from 0 percent to 100 percent n 1 percent or smaller increments.

8.3.2* Piping Systems Allowed to Be Purged Indoors or Outdoors. The purging of piping systems shall be in accordance with the provisions of 8.3.2.1 where the piping system meets both of the following:

(1) The design operating pressure is 2 psig (14 kPag) or less.

(2) The piping being purged is constructed entirely from pipe or tubing not meeting the size and length criteria of Table 8.3.1.

8.3.2.1* Purging Procedure. The piping system shall be purged in accordance with one or more of the following:

(1) The piping shall be purged with fuel gas and shall discharge to the outdoors.

(2) The piping shall be purged with fuel gas and shall discharge to the indoors or outdoors through an appliance burner not located in a combustion chamber. Such burner shall be provided with a continuous source of ignition

(3) The piping shall be purged with fuel gas and shall discharge to the indoors or outdoors through a burner that has a continuous source of ignition and that is designed for such purpose.

(4) The piping shall be purged with fuel gas that is discharged to the indoors or outdoors, and the point of discharge shall be monitored with a listed combustible gas detector in accordance with 8.3.2.2. Purging shall be stopped when fuel gas is detected.

(5) The piping shall be purged by the gas supplier in accordance with written procedures.

8.3.2.2 Combustible Gas Detector. Combustible gas detectors shall be listed and calibrated or tested in accordance with the manufacturer's instructions. Combustible gas detectors shall be capable of indicating the presence of fuel gas.

8.3.3 Purging Appliances and Equipment. After the piping system has been placed in operation, appliances and equipment shall be purged before being placed into operation.

NOTICE: An asterisk (*) following the number or letter designating the paragraph indicates that explanatory material on the paragraph can be found in Appendix A of the Natural Fuel Gas Code.