INSTALLATION AND OPERATING INSTRUCTIONS

IBC®

Better Boilers

HC Series Boilers

HC 13-50, HC 23-84, HC 29-106, HC 20-125, HC 33-160

(Natural Gas or Propane)

WARNING: If the information in this manual is not followed exactly, a fire or explosion may result causing property damage, personal injury, or loss of life.

Do not store or use gasoline or other flammable vapours and liquids or other combustible materials in the vicinity of this or any other appliance.

WHAT TO DO IF YOU SMELL GAS:

- **Do not try to light any appliance.**
- **Do not touch any electrical switch; do not use any phone in your building.**
- **Immediately call your gas supplier from a nearby phone. Follow the gas supplier's instructions.**
- **If you cannot reach your gas supplier, call the fire department.**

Installation and service must be performed by a qualified installer, service agency or the gas supplier.

This Manual is also available in French - contact IBC or visit our web site www.ibcboiler.com

C US

ENERGY STAR

C US

NSF/ANSI 372
Low Lead Content

AHRI CERTIFIED™

WARNING

If the information in this manual is not followed exactly, a fire or explosion may result causing property damage, personal injury, or loss of life.

SAFETY CONSIDERATIONS

Installation, start-up and servicing of IBC boilers must be done with due care and attention, and should only be performed by competent, qualified, licensed and trained heating technicians. Failure to read and comply with all instructions and applicable National and local codes may result in hazardous conditions that could result in property damage and injury to occupants which in extreme cases might result in death.

HAZARDS & PRECAUTIONS

DANGER

Points out an immediately hazardous situation which must be avoided in order to prevent serious injury or death.

WARNING

Points out a potentially hazardous situation which must be avoided to prevent serious injury or death.

CAUTION

Points out a potentially hazardous situation which must be avoided to prevent possible moderate injury and/ or property damage

NOTE

Points out installation, maintenance and operation details that will result in enhanced efficiency, longevity and proper operation of your boiler.

BEST PRACTICES

Points out recommendations for better installation.

Supplied with the boiler - The IBC boiler is shipped with an accessory parts kit consisting of the following items:

- 1 x Wall Mounting Bracket, IBC Part # 250-647
- 1 x Condensate Assembly
- 1 x Pressure Relief valve, 3/4NPT, 30psi
- 1 x Outdoor Temperature Sensor
- Air Vent and Relief Valve fittings
- 1 x Automatic Air Vent
- 4 x Lag Screws, Hex Head, Zn-Pl, 1/4 x 2-1/2 and Washers
- 1 x HC Installation & Operating Instructions
- 1 x DC/HC User Manual

SPECIFICATIONS

SPECIFICATION	HC 13-50	HC 23-84	HC 29-106	HC 20-125	HC 33-160
CSA Input (Natural Gas or Propane) – MBH	13.5 - 51	23 - 84	28.5 - 106	20 - 125	33 - 160
CSA Input (Natural Gas or Propane) – KW	3.95 - 14.94	6.7 - 24.9	8.4 - 31.0	5.6 - 36.6	9.7 - 46.9
CSA Output – MBH	12.4 - 45.4	21.2 - 74.8	26.3 - 94.3	18.6 - 110.8	30.4 - 140.0
CSA Output - KW	3.64 - 13.3	6.2 - 21.9	7.7 - 27.6	5.4 - 32.5	8.9 - 41.0
A.F.U.E	94%	94%	94%	95%	94%
Min Gas Pressure (Nat. Gas or Propane) – inch w.c.	5	5	5	5	5
Max Gas Pressure (Nat. Gas or Propane) – inch w.c.	14	14	14	14	14
Power (120Vac/60Hz) - Watts @ full fire with internal pump	126	126	128	130	164
Weight (empty) – lbs/Kg	85 / 39	85 / 39	85 / 39	85 / 39	85 / 39
Pressure Vessel water content – USG/Liters	0.37 / 1.4	0.37 / 1.4	0.37 / 1.4	0.5 / 1.9	0.5 / 1.9
Max boiler flow rate - USgpm	9	9	10	11	11
Min boiler flow rate - USgpm	2	2	3	3	3
Max Operating Pressure – Space Heating Coil - psig	43.5	43.5	43.5	43.5	43.5
Approved installation altitude - ASL	12,000 ft	12,000 ft	12,000 ft	12,000 ft	12,000 ft
Ambient Temperature – Low (°F/°C)	32 / 0	32 / 0	32 / 0	32 / 0	32 / 0
Ambient Temperature – High (°F/°C)	122 / 50	122 / 50	122 / 50	122 / 50	122 / 50
Max relative humidity (non-condensing)	90%	90%	90%	90%	90%
Min water Temperature - Space Heating (°F/°C)	50 / 10	50 / 10	50 / 10	50 / 10	50 / 10
Max water Temperature – Space Heating (°F/°C)	194 / 90	194 / 90	194 / 90	194 / 90	194 / 90
Max equivalent vent length 3" (each side)	120'	120'	120'	120'	120'
Max equivalent vent length 2" (each side)	35'	35'	35'	35'	35'

* Natural Gas boilers require a Propane conversion kit (see page #3-2, Table 9) to be ordered separately if converting a Natural Gas boiler to Propane. Propane (LP) boilers require a Natural Gas conversion kit (see page #3-2, Table 9) to be ordered separately if converting a Propane boiler to Natural Gas.

† boilers are shipped with 30 psig pressure relief valve

PAGE INTENTIONALLY LEFT BLANK

CONTENTS

1.0 INSTALLATION . . . 1-1
1.1 GENERAL . . . 1-1
1.2 CODE REQUIREMENTS . . . 1-2
1.3 LOCATION . . . 1-2
1.4 EXHAUST VENTING AND AIR INTAKE . . . 1-3
1.5 CONDENSATE REMOVAL . . . 1-16
1.6 WATER PIPING - SPACE HEATING . . . 1-19
1.7 GAS PIPING . . . 1-27
1.8 ELECTRICAL CONNECTIONS . . . 1-28

2.0 BOILER SYSTEMS AND OPERATION . . . 2-1
2.1 GENERAL . . . 2-1
2.2 CONTROL . . . 2-2
2.3 INSTALLER INTERFACE . . . 2-2
2.4 TANKLESS DOMESTIC HOT WATER MODES . . . 2-7
2.5 ADDING DOMESTIC HOT WATER STORAGE . . . 2-7
2.6 SPACE HEATING . . . 2-8
2.7 SEQUENCE OF OPERATION . . . 2-9

3.0 STARTUP AND COMMISSIONING . . . 3-1
3.1 LIGHTING AND SHUTTING DOWN THE BOILER . . . 3-1
3.2 PRIOR TO START-UP . . . 3-2
3.3 COMMISSIONING . . . 3-2
3.4 FUEL CONVERSION . . . 3-4

4.0 MAINTENANCE . . . 4-1
4.1 BOILER MAINTENANCE . . . 4-1

5.0 TROUBLESHOOTING . . . 5-1
5.1 PRELIMINARY CHECKS . . . 5-1
5.2 ELECTRONIC COMPONENTS . . . 5-2
5.3 WARNINGS AND FAULTS . . . 5-5
5.4 OTHER FAULTS . . . 5-7

6.0 DIAGRAMS . . . 6-1
6.1 PARTS DIAGRAMS . . . 6-2
6.2 WIRING DIAGRAMS . . . 6-4

The Installer must carefully read this manual to ensure that all installation details can be adhered to. Special attention is to be paid to clearances and access, vent travel and termination, gas supply, condensate removal and combustion air supply.

The Installer should do a pre-installation check the to ensure that the following precautions can be observed:

- The boiler should be installed in areas where the combustion air source is not subject to chemical fouling or agricultural vapours. Exposure to corrosive chemical fumes such as chlorinated and/or fluorinated hydrocarbons can reduce the life of a boiler. Cleaners, bleaches, air fresheners, refrigerants, aerosol propellants, dry-cleaning fluids, de-greasers and paint-removers all contain vapours which can form corrosive acid compounds when burned in a gas flame. Airborne chlorides such as those released with the use of laundry detergents are also to be avoided.
- The boiler should be located where water leakage will not result in damage to the area. If a location such as this cannot be found, a suitable drain pan should be installed under the appliance. The boiler is not to be installed above carpeting.
- At a new construction site, or during renovations, action must be taken to protect the boiler from drywall dust or other construction related contaminants; combustion air should be drawn from a CLEAN source (e.g. outdoors) and the boiler should be isolated from interior dust sources.
- When the boiler is in operation, the impact of the steam plume normally experienced at the exhaust terminal of a condensing boiler should be assessed. Generally, intake and exhaust pipes should terminate at a rooftop or sterile wall location. Boiler condensate is corrosive. Protective measures must be taken to prevent corrosion damage to metal roofs or other metal building components in contact with the condensate. Keep exhaust plumes well away from all building air intakes including those of neighbouring properties.
- The exhaust outlet should be placed so as to reach 12" minimum above the down-turned intake - to avoid exhaust re-ingestion.
- For sidewall venting options: Both the inlet and exhaust terminations should normally be located on the same plane (side) of the building. The elevation of both pipes can be raised in “periscope style” after passing through the wall to gain required clearance above grade and snow level.
- Examine the condensate outlet to ensure proper disposal of condensate will occur during operation. If condensates are to be discharged into building drain piping materials that are subject to corrosion, a neutralization package must be used.
- Ensure that the pressure relief valve will be installed with no valves or other means of isolation between its inlet and the boiler. Make sure the relief valve outlet will be piped with unobstructed piping (minimum 3/4" diameter) to a safe discharge location.
- In locations where power supply quality varies or is unstable, installation of surge protection and power conditioners up to and including battery back-up uninterrupted power supply devices should be considered.
- Ensure the domestic hot water demands are considered before purchasing the HC Series boiler. The addition of a storage tank or an IBC Indirect Water Heater may be required in some cases.

⚠ DANGER

Should overheating occur or the gas supply fails to shut off, do not turn off or disconnect the electrical supply to the pump. Instead shut off the gas supply at a location external to the appliance.

⚠ WARNING

Do not use this boiler if any part has been under water. Immediately call a qualified service technician to inspect the boiler and to replace any part of the control system and any gas control that has been under water.

⚠ CAUTION

Care must be taken to properly size the boiler for its intended use. Prolonged full fire run time, over-sizing or under-sizing, and incorrect flow rates through the boiler can lead to increased maintenance costs, equipment stress and premature failure.

1.0 INSTALLATION

1.1 GENERAL

HC Series gas-fired modulating boilers are low pressure, fully condensing units having variable input ranges *(see specification chart - page 3).* The boilers are approved as “Category IV” vented appliances using Direct Vent (sealed combustion).

Figure 1 shows outer case dimensions and piping and electrical holes. Use this diagram to find a suitable location for the boiler. *See also Section 1.3 Location.*

MODEL NUMBER	HEIGHT
HC 13-50	26.6" [676]
HC 23-84	26.6" [676]
HC 29-106	29.0" [736]
HC 20-125	31.3" [796]
HC 33-160	31.3" [796]

	DESCRIPTION	HC SERIES BOILERS
A	Exhaust Outlet	3" Schedule 40
B	Combustion Air	3" Schedule 40
E	Heating Water Inlet (Return)	1" Male NPT
F	Heating Water Outlet (Supply)	1" Male NPT
G	Gas Inlet	1/2" Male NPT
H	Condensate Outlet	3/4" Hose
I	Knock-out (3)	1/2"

Table 1: Connections

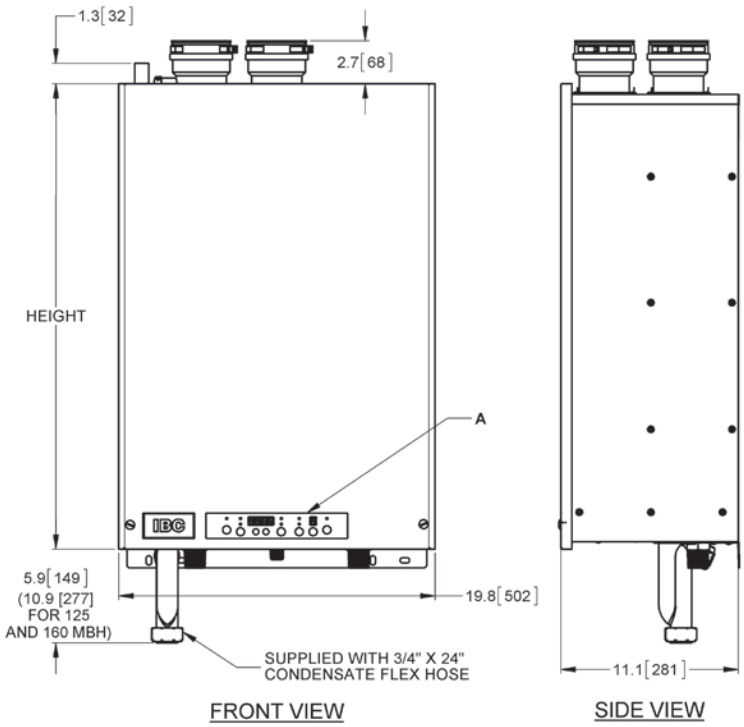

Figure 1a: Dimensions / Connections for HC Series

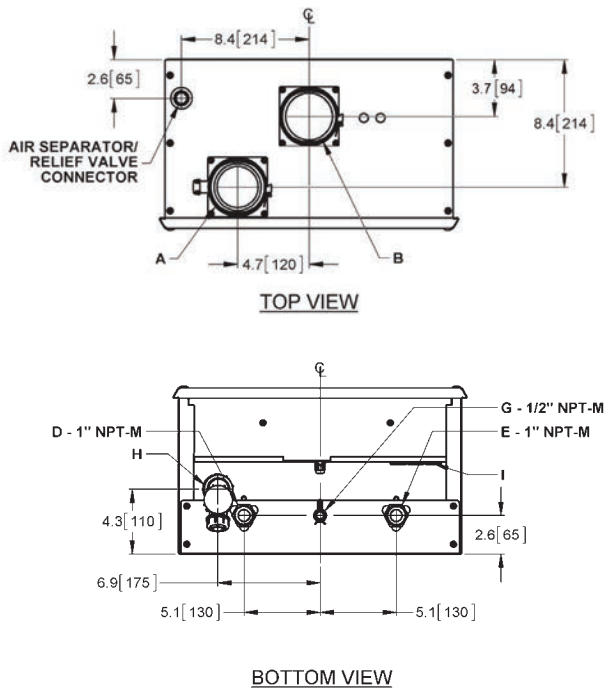

Figure 1b: Dimensions / Connections for HC Series

1.2 CODE REQUIREMENTS

The HC 13-50, HC 23-84, HC 29-106, HC 20-125, HC 33-160 models were tested to and certified under CSA 4.9-2014 / ANSI Z21.13-2014.

The installation must conform to the requirements of the authority having jurisdiction or, in the absence of such requirements, to the *National Fuel Gas Code, ANSI Z223.1/NFPA 54, and/or Natural Gas and Propane Installation Code, CAN/CSA B149.1.* The installation must also conform to the Canadian Electrical Code Part 1 CSA C22.2 No.1 and/or the National Electrical Code ANSI/NFPA 70. Where required by jurisdiction, installation must conform to the Standard for Controls and Safety Devices for Automatically Fired Boilers, ANSI/ASME CSD-1. If there is any conflict, then the more stringent will apply.

1.3 LOCATION

⚠ WARNING

Keep boiler area free and clear of combustible materials, gasoline, and other flammable vapours and liquids.

⚠ WARNING

Combustion air must not be drawn from areas containing corrosive air from swimming pools or spas, including air directly next to outdoor pools and spas.

⚠ WARNING

The boiler shall not be exposed to water leaks from piping or components located overhead. This includes condensation dropping from un-insulated cold water lines overhead.

⚠ WARNING

Ensure the gas ignition system components are protected from water (dripping, spraying, rain, etc.) during appliance operation and when servicing (pump replacement, condensate trap servicing, control replacement, etc.)

The HC series boilers are designed and approved for indoor installation (wall), with significant flexibility of location provided with the available venting options. The boiler can be placed in an alcove, basement, closet or utility room. Surrounding ambient conditions shall be 0°C to 50°C *and less than 90% relative humidity.*

Install the boiler in areas where the combustion air source is not subject to chemical fouling or agricultural vapours. Exposure to corrosive chemical fumes such as chlorinated and/or fluorinated hydrocarbons can reduce the life of a boiler. Cleaners, bleaches, air fresheners, refrigerants, aerosol propellants, dry-cleaning fluids, de-greasers and paint-removers all contain vapours which can form corrosive acid compounds when burned in a gas flame. Airborne chlorides such as those released with the use of laundry detergents are also to be avoided. Similarly, ensure any direct vent air source is not adjacent to a clothes dryer exhaust terminal. **Avoid agricultural applications where the boiler and/or the intake air source are affected by ammonia and/or dust.**

Locate the boiler where water leakage will not result in damage to the area. If a location such as this cannot be found, a suitable drain pan should be installed under the appliance. The boiler is not to be installed above carpeting.

Boiler Weight – approximately 85 lbs / 39 kg. For support fasteners, use the supplied 4 x 1/4" x 2-1/2" long lag screws. Installer to supply 1/4" bolts if metal mounting systems are used. Fasteners are to be attached to solid material capable of supporting the combined weight of the boiler and piping assembly components.

Other factors affecting potential mounting sites:

- Ensure minimum clearance requirements for combustible materials *(see Table 2)* are satisfied.
- Minimum 24" clearance at the front and 10" above is recommended for adequate servicing. Check local codes for additional access and service clearance requirements.
- **At a new construction site, or during renovations, action must be taken to protect the boiler from drywall dust or other construction related contaminants; combustion air should be drawn from a CLEAN source (e.g. outdoors) and the boiler should be isolated from interior dust sources.**

WARNING

Exposed water piping and associated components (relief valves, circulators, etc.) should not be in contact with combustible materials. Check local codes for required clearances and/or provide adequate insulation.

SURFACE	DISTANCE FROM COMBUSTIBLE SURFACES	RECOMMENDED DISTANCE FOR INSTALLATION AND SERVICE
Front	2"	24"
Rear	0"	0"
Left Side	1.5"	6" (labels may be difficult to read with reduced clearance)
Right Side	4"	6" (labels may be difficult to read with reduced clearance)
Top	2"	24"
Bottom	8"	24"

Table 2: Clearance from boiler cabinet

A minimum distance below the boiler of 10" is required to provide clearance for the supplied condensation trap assembly. More clearance will typically be required to accommodate associated water and gas piping.

WARNING

DO NOT MOUNT THIS BOILER TO HOLLOW WALL STRUCTURES - The combined weight of the boiler, its water contents and associated piping components can exceed 150 pounds. Fasteners must be rated for this strain, and must be firmly anchored into solid material that will support this weight.

Installers are to take all necessary precautions to avoid injury during the installation of this boiler.

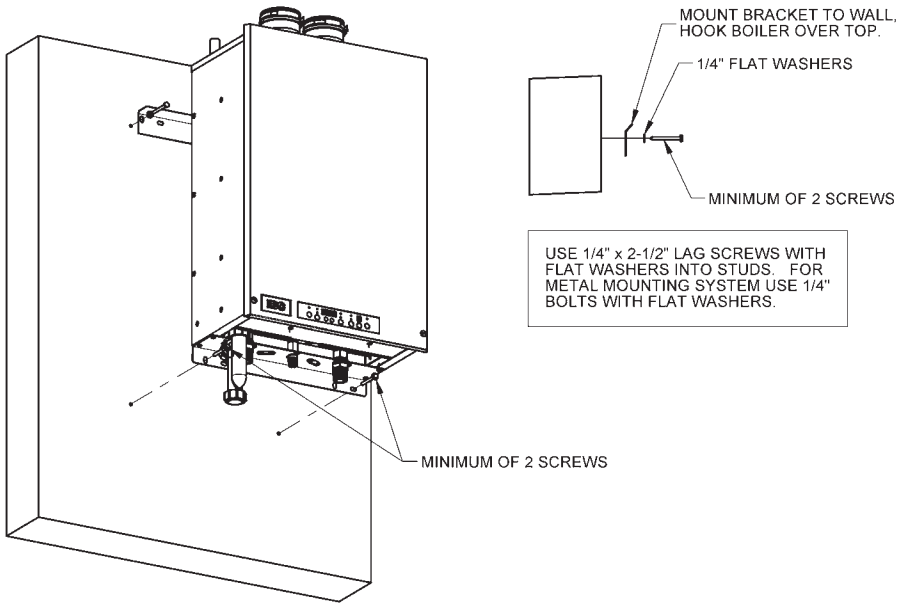

Figure 2: Wall mounting of boiler

1.4 EXHAUST VENTING AND AIR INTAKE

DANGER

Do not common vent the HC modulating series boilers with any other existing or new appliance.

It is important to carefully plan the installation to ensure the appropriate vent materials, travel and termination decisions are incorporated. Specific attention is warranted to manage the impact of the steam plume normally experienced at the exhaust terminal of a condensing boiler. Generally, intake and exhaust pipes should terminate at a rooftop or sterile wall location, to maximize customer satisfaction. Keep exhaust plumes well away from all building air intakes including those of neighbouring properties.

WARNING

Venting, condensate drainage, and combustion air systems for all IBC boilers must be installed in compliance with all applicable codes and the instructions of their respective Installation Manuals.

Inspect finished vent and air piping thoroughly to ensure all are airtight and comply with the instructions provided and with all requirements of applicable codes.

Failure to comply will result in severe personal injury or death.

All venting must be installed in accordance with the requirements of the jurisdiction having authority: in Canada, Part 8, *Venting Systems* of the B149.1-10 Code and any other local building codes are to be followed. In the USA the National Fuel Gas Code, ANSI 223.1, latest edition, prevails. Where there is a discrepancy between the installation instructions below, and the code requirements, the more stringent shall apply.

Provisions for combustion and ventilation air in accordance with the section “Air for Combustion and Ventilation,” of the *National Fuel Gas Code, ANSI Z223.1/ NFPA 54*, or Clause 8.2, 8.3 or 8.4 of *Natural Gas and Propane Installation Code, CAN/CSA B149.1*, or applicable provisions of the local building codes.

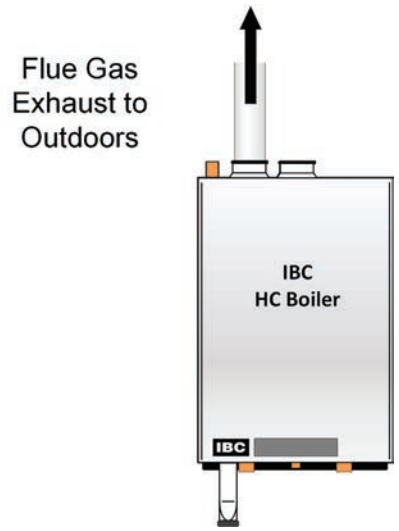

Figure 3: Basic exhaust vent assembly

IMPORTANT

When an existing boiler is removed from a common venting system, the common venting system is likely to be too large for proper venting of the appliances remaining connected to it.

When re-sizing any portion of the common venting system, the common venting system should be re-sized to approach the minimum size as determined using the appropriate tables in the National Fuel Gas Code, ANSI Z223.1 - latest edition. In Canada, use the B149.1 Installation Code - latest edition.

At the time of removal of an existing boiler the following steps shall be followed with each appliance remaining connected to the common venting system placed in operation, while the other appliances remaining connected to the common venting system are not in operation.

- Seal any unused opening in the common venting system.
- Visually inspect the venting system for proper size and horizontal pitch and determine there is no blockage or restriction, leakage, corrosion and other deficiencies which could cause an unsafe condition.
- Insofar as is practical, close all building doors and windows and all doors between the space in which the appliances remaining connected to the common venting system are located and other spaces of the building. Turn on clothes dryers and any appliance not connected to the common venting system. Turn on any exhaust fans, such as range hoods and bathroom exhausts, so they will operate at maximum speed. Do not operate a summer exhaust fan. Close fireplace dampers.

NOTE

The minimum wall thickness for venting is 1” and the maximum wall thickness for venting is 14”.

- Place in operation the appliance being inspected. Follow the lighting instructions. Adjust thermostat so appliance will operate continuously.
- After it has been determined that each appliance remaining connected to the common venting system properly vents when tested as outlined above, return doors, windows, exhaust fans, fireplace dampers and any other gas-burning appliance to their previous conditions of use.
- Any improper operation of the common venting system should be corrected so the installation conforms with the National Fuel Gas Code, ANSI Z223.1 - latest edition. In Canada, all installations must conform with the current CAN/CGA - B149.1 Installation Code and/or local codes.

1.4.1 Applications

All HC Series boilers must be installed as a Direct Vent venting system. The combustion air must be piped in from the outdoors and connected directly to the boilers combustion air connection. *See section 1.4.7 for air intake piping requirements.*

1.4.2 Exhaust Vent Material

WARNING

Covering non-metallic vent pipe and fittings with thermal insulation shall be prohibited.

EXHAUST VENT MATERIAL – CANADA

Only PVC, CPVC or Polypropylene (PPs) vent component systems approved under *ULC-S636 Standard for Type BH Gas Venting Systems*, or stainless steel Type BH venting systems* are to be used. Ensure compliance with exhaust temperature limitations for the respective materials. The vent temperature is limited with the use of a flue temperature sensor and software to ensure the maximum temperature of the PVC venting material is not exceeded.

- ULC-S636 PVC
- ULC-S636 CPVC
- ULC-S636 PPs

EXHAUST VENT MATERIAL – USA

PVC, CPVC, PPs venting materials are approved for use with this boiler in the USA. The vent temperature is limited with the use of a flue temperature sensor and software to ensure the maximum temperature of the PVC venting material is not exceeded. PVC venting material shall be certified to Sch. 40 ASTM D1785 or D2665. CPVC venting material shall be certified to Sch. 40 ASTM F441.

WARNING

Do not mix venting materials from different Manufacturers.

These venting materials are designed to be installed as part of a complete system.

Failure to comply may result in severe personal injury or death.

Do not use ABS or any cellular core pipe for exhaust venting.

Use of cellular core PVC (ASTM F891), cellular core CPVC, or Radel® (polyphenolsulfone) in venting systems shall be prohibited.

The boiler offers 3" venting connections. Fittings are to be used to adapt to the appropriate diameter *(see Vent Travel below).* CPVC or PVC Exhaust Venting is to be inserted directly into the 3" female stainless steel fitting on left side of the boiler's top panel. The clamp must be tightened to secure the pipe into the fitting. If PPs materials are being used, ensure the proper adapter is used to transition from the Schedule 40 diameter to the PPs size diameter.

For PPs material, use the 3" transition/ adaptor fitting (Sch 40 to PPs) offered by the respective PPs manufacturers Centrotherm / *Innoflue*™ (their part # ISAA0303) or M&G Dura Vent /PolyPro (#3PPS-AD). For PPs material exposed to outdoor weather, follow the venting suppliers' recommendations on UV protection.

Combustion air piping is inserted directly into the 3" female stainless steel fitting on the right *(see Section 1.4.7).*

Venting shall be supported in accordance with applicable code.

***Manufacturers of stainless steel Type BH venting systems must submit their approved transition fitting to IBC for evaluation and written approval.**

1.4.3 Vent Travel

CPVC or PPs (Rigid Single Wall) piping is the standard venting option; with this, the HC Series boilers, for example, can be vented up to 120 equivalent feet from the vent termination using 3". The actual vent travel allowance is reduced for fittings in accordance with *Table 3.* – e.g. for the models listed above using 6 x 90º CPVC long sweep elbows, the maximum lineal measure of pipe allowed using 3" pipe is 90 feet (120' – (6 x 5' = 30) = 90').

For 3" Flexible PPs, up to 35 actual lineal feet are allowed in a nominally vertical orientation (>45°). The equivalent length of 3" Flexible PPs shall be computed using a multiple of 1.4:1, e.g. 35' x 1.4 = 49' equivalent. The balance of the venting allowance is still available for use with rigid PPs piping material. 2" Flexible PPs is not allowed.

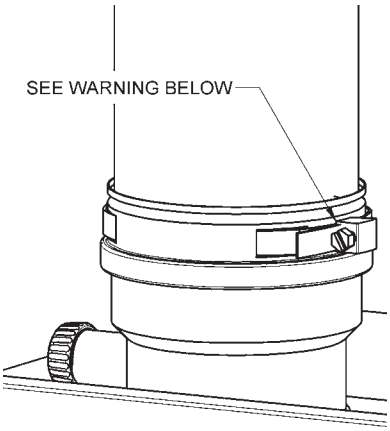

EXHAUST PIPE SIZE/FITTINGS	MAXIMUM EQUIVALENT LENGTH
Schedule 40 PVC, CPVC or PPs – Allowances are for each side separately.	
2"	35'
3"	120'
2" or 3" 90' Long Sweep Vent Elbow	Allow 5 equivalent feet
2" or 3" 90' Short Sweep Vent Elbow	Allow 8 equivalent feet
2" or 3" 45' Vent Elbow	Allow 3 equivalent feet
PPS	
PPs 87-90' Elbow	Allow 8 equivalent feet
Flex PPS	
3" PPs Flex	(Max. 35) actual feet times 1.4

Table 3: Maximum Exhaust Venting Length

WARNING

Fully insert the approved venting material into the boilers exhaust outlet and tighten clamp to ensure the venting connection is locked in place.

Exhaust venting must slope down towards the boiler with a pitch of at least 1/4" per foot (PPs vent: follow PPs manufacturer requirements) so condensate runs back towards the trap. Support should be provided for intake and vent piping, particularly so for horizontal runs (follow local code).

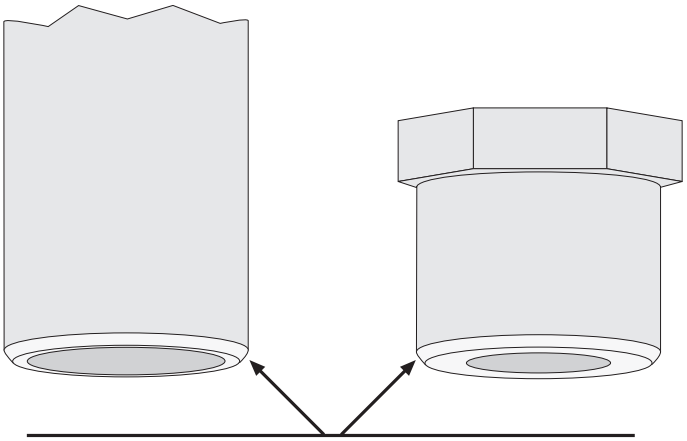

ENSURE PIPE AND FITTINGS ARE BEVELED FOR TROUBLE-FREE INSERTION THROUGH EXHAUST AND INTAKE PIPE GASKETS

WET GASKETS AND PIPE BEFORE INSERTION

Figure 4

Exhaust piping is inserted directly into the 3" female stainless steel fitting on the top, left side of the boiler and run horizontally or vertically to the outdoors. Bird screen of 1/4" stainless steel or plastic mesh (eg. IPEX System 636 drain grate for CPVC systems) is useful to guard against foreign objects.

Follow all installation instructions supplied by the pipe and fitting manufacturer.

Ensure all venting components are clean of burrs/debris prior to assembly. Care is to be taken to avoid ingestion into the fan of PVC/ABS debris left in the combustion air piping.

BEST PRACTICES

To reduce the possibility of expansion noise, allow a 1/4" gap around the exhaust and air intake piping.

All joints must be secured using appropriate solvent cement to bond the respective pipe material (Canada: CPVC cement approved under *ULC-S636, in accordance with its manufacturer instructions;* USA: PVC (ASTM D2564), or PVC/ABS (D2235) - Use transition glue anywhere that PVC and CPVC are joined. Follow the cement manufacturer's instructions closely when joining various components. For PPs, connections shall be secured using approved retainer clips supplied by the respective PPs manufacturer.

All vent connections must be liquid and pressure tight. Prior to firing the boiler, and before any of the venting run is concealed by the building construction, the installer must test the exhaust joints under fan pressure with the vent blocked, using a soap/water solution. Installer must fill condensate trap prior to test.

1.4.4 Venting Passage Through Ceiling and Floor

- Confirm material meets local codes including fire stopping requirements.
- Some local jurisdictions require a minimum initial length of pipe be exposed or accessible for inspection.
- Pipe clearances - no IBC requirements, but best practice allows a minimum 1/4" gap around the pipe to prevent binding and expansion noise; follow local codes.
- All piping must be liquid and pressure tight.

⚠ CAUTION

Vent termination clearances in this section are code minimum, or IBC recommended minimum requirements, and may be inadequate for your installation. Building envelope details must be examined carefully, and ingress of moisture into building structures is to be avoided. Serious structural damage may occur if adequate precautions and clearances are not allowed for.

These precautions are to be observed for neighbouring structures as well as for the structure the boiler(s) are installed in.

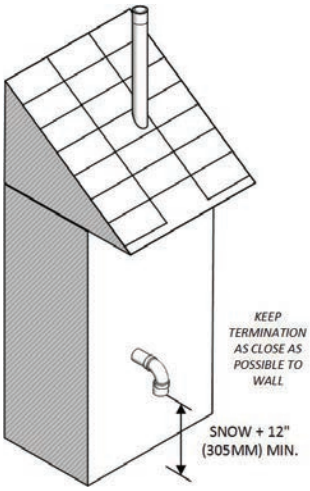

Figure 5a: Rooftop exhaust venting with sidewall combustion air.

⚠ WARNING

Condensate can cause corrosion of metal roofing components and other roofing materials. Check with the builder or roofing contractor to ensure that materials will be resistant to acidic condensate. pH levels can be as low as 3.0

1.4.5 Rooftop Vent Termination

DIRECT VENT - TWO PIPE

Rooftop vents must terminate as follows:

- The exhaust pipe can terminate in an open vertical orientation without concern about rain infiltration; rain will drain away through the condensate trap.
- The intake air pipe is not typically drained, so it must be terminated with a down-turned elbow *(see Figure 5).* The intake pipe does not need to penetrate the roof at the same elevation as the exhaust; lower down the roof is OK.
- The air intake pipe may terminate on the side wall of the building as long as the air intake terminal is turned down and the side wall of the building is not exposed to large wind loads i.e.: prevailing winds.
- Optional bird screen may be placed in a termination fitting. Leave unglued, and hold in place with a short nipple. This permits easy access for cleaning.
- For roof top venting of multiple boiler sets, group all intake terminals together for a common penetration through a custom cap. Alternatively, place in the closest proximity achievable using commonly available pipe flashing. Similarly group the exhaust pipes and place the 2 separate groups of pipes at least 3' apart (the closest intake and exhaust pipes shall be 36" - or more - apart). Use the same 12" (minimum) vertical separation for 2 pipe option. For alternate group terminations, contact the IBC Factory for written guidance.
- **DO NOT exhaust vent into a common venting system.**

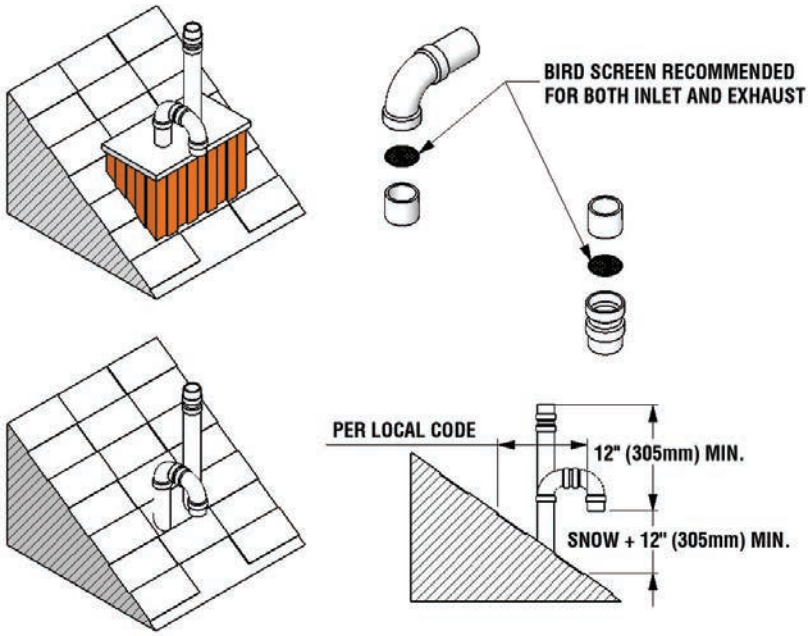

Figure 5: Rooftop vent terminal configurations

DIRECT VENT CONCENTRIC ROOF TOP TERMINATION

Roof Top Concentric Termination Kits are approved for use with this boiler model. The installation of the vertical roof top concentric termination must follow the installation instructions supplied with the venting material manufacturer. Care must be taken to install the termination kit a minimum horizontal distance of 10' (305cm) away from any portion of the building and a minimum of 18" (46cm) above the roof line plus the anticipated snow line. *See Figure 6 and 7 on page 1-9.*

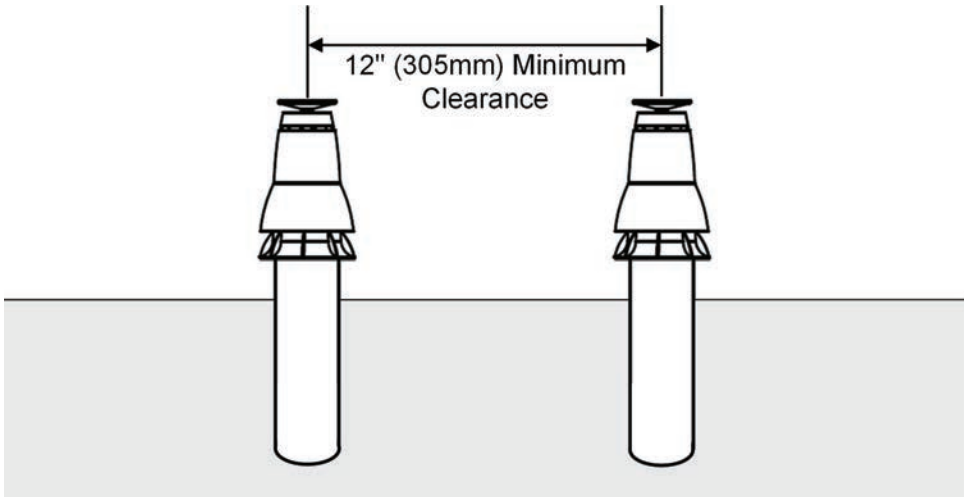

Figure 6: Vertical Concentric Termination - Two Kits

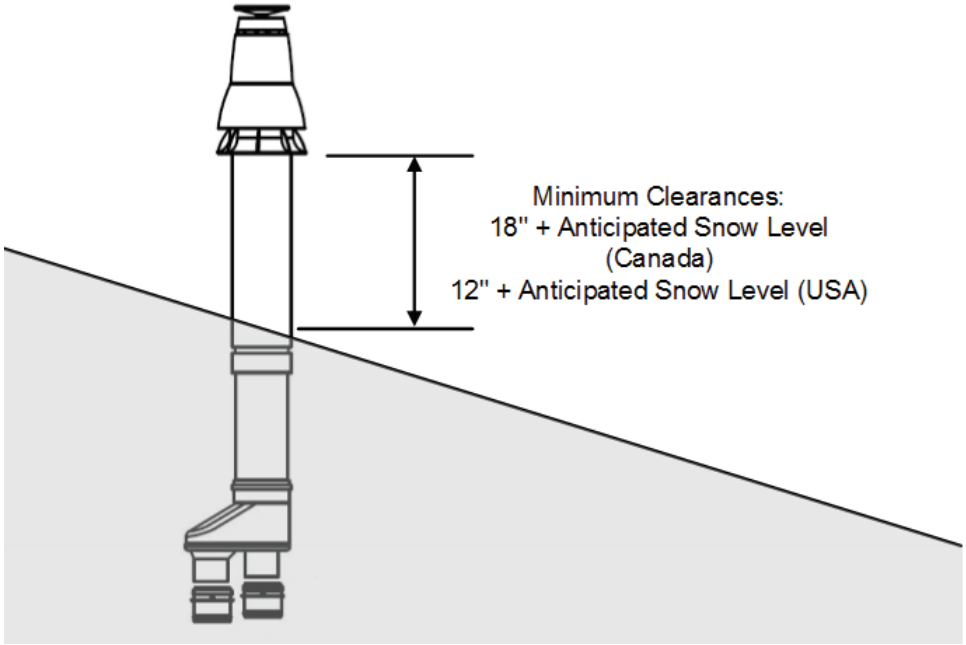

Figure 7: Vertical Concentric Termination - Single Kit

1.4.6 Sidewall Vent Termination

DIRECT VENT - TWO PIPE

Sidewall direct vent applications shall be vented as follows:

- Both the inlet and exhaust terminations should normally be located on the same plane (side) of the building.
- The exhaust outlet is to be placed so as to reach 12" minimum above the down-turned intake - to avoid intake re-ingestion of exhaust gases.
- The elevation of both pipes can be raised in “periscope style” after passing through the wall, then configured as in *Figure 8,* to gain required clearance.

⚠ WARNING

It is extremely important to maintain at least the minimum separation of exhaust vent termination from boiler intake air as illustrated in figures 5, 8 and 13. Failure to do so can result in a dangerous situation where exhaust gasses are re-ingested with combustion air. Damage to the boiler can result from a failure to maintain these separations. Improper installation will void the warranty.

- Use a 45° elbow on the exhaust termination to launch the plume up and off the sidewall, for protection of wall.
- Bird screen of 1/4" stainless steel or plastic mesh eg. (IPEX System 636 drain grate for CPVC systems) is useful to guard against foreign objects.

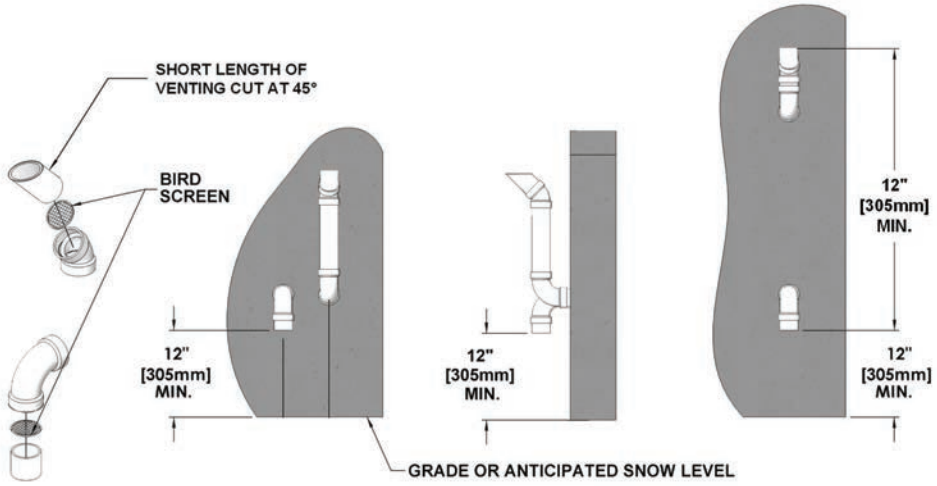

Figure 8: Sidewall vent termination - piping configuration

DIRECT VENT SIDE WALL TERMINATION KITS

The following Side Wall Termination Kits are approved for use with the HC series boilers and are subject to the following restrictions. NOTE: Some jurisdictions may not allow this type of side wall termination due to close proximity to the neighboring properties. *See Figures 9a, 9b and 10 on page 1-11.*

The installation instructions, clearances and wall thickness requirements of the approved vent termination manufactures must be followed.

Approved Side Wall Termination Kits are listed as follows: (Alternate vent termination kits must be submitted to IBC for approval prior to installation.)

- Ipex - #196984 – 2" PVC low profile termination kit (*see Figure 10*).
- Ipex - #196985 – 3" PVC low profile termination kit (*see Figure 10*).

⚠ WARNING

In areas of high snowfall, Users must be advised to check side wall vent and air intake terminations on a regular basis to ensure blockage does not occur.

Figure 9a: Horizontal Concentric Termination - Two Kits

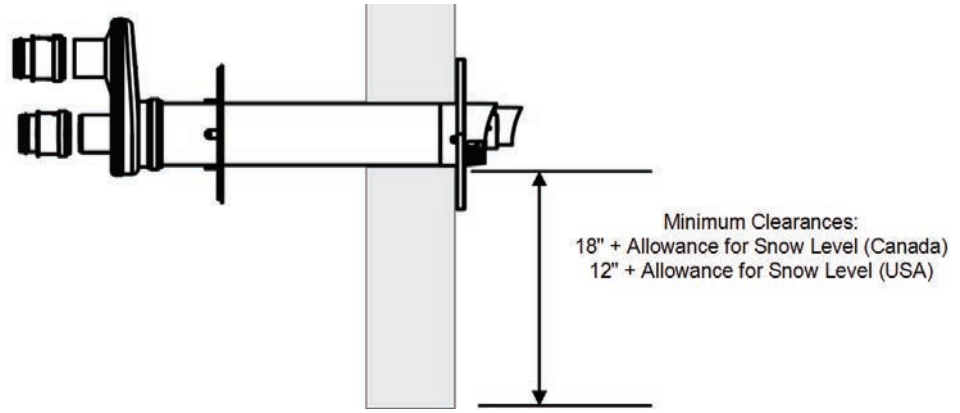

Figure 9b: Horizontal Concentric Termination - Single Kit

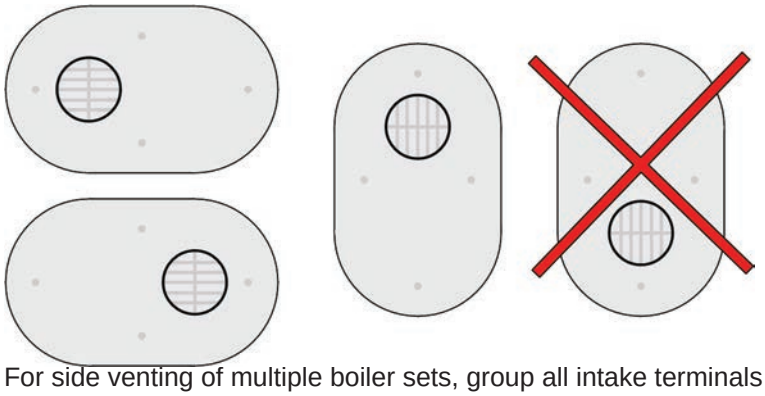

For side venting of multiple boiler sets, group all intake terminals together with

Figure 10: Ipex #196984 2" PVC and #196985 3" PVC

6" (minimum) lateral spacing, and similarly group the exhaust pipes. Place the 2 groups on the same plane of the building (e.g. north facing wall). Place the 2 groups of pipes at least 3' apart (the closest intake and exhaust pipes shall be 36" - or more – apart. Use same 12" (minimum) vertical separation (*See (A) in Figure 13*). Alternately, as long as the boilers are identical models - intake and exhaust terminals can maintain a minimum of 12" of separation horizontally from any exhaust or inlet termination of an adjacent boiler (*See (B) in Figure 13*). For alternate group terminations, contact the IBC Factory for written guidance.

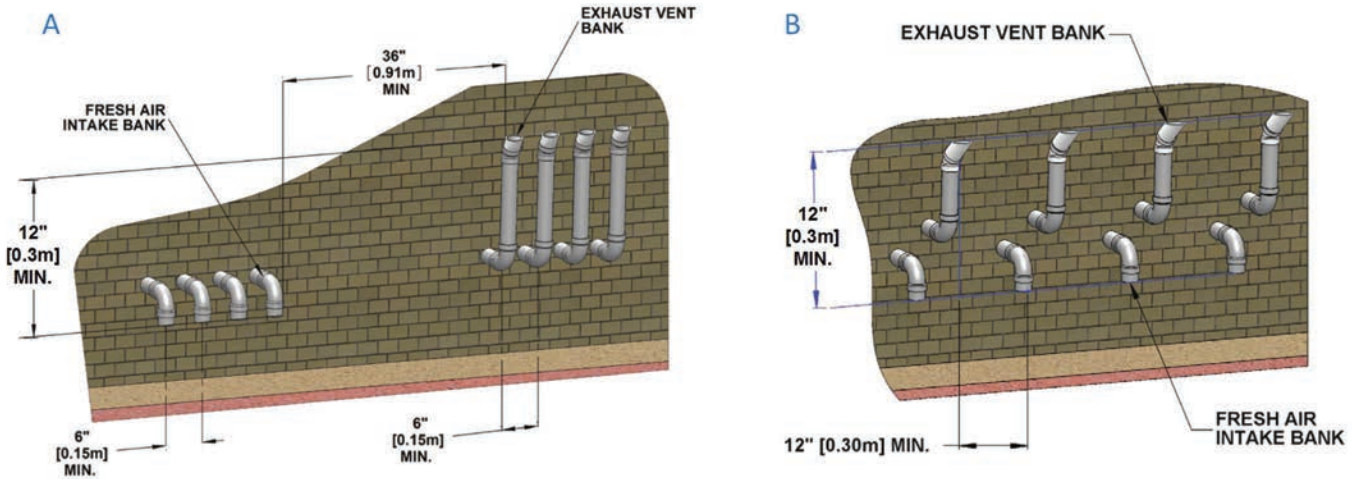

Figure 13: Sidewall vent termination - multiple vent piping configuration

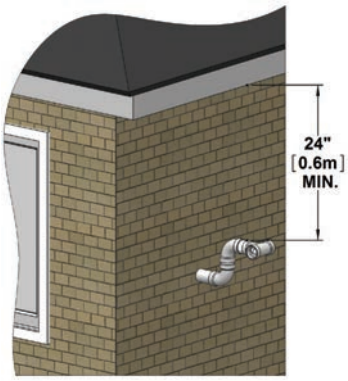

Figure 11: IBC recommended minimum vent terminal clearance under ventilated soffit

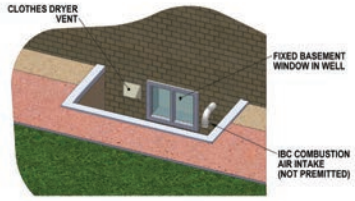

Figure 12: Prohibited installation

CONCENTRIC SIDE WALL TERMINATION KITS:

Must be installed on the same horizontal line (not stacked)

Must be installed with a min separation of 12” center to center

Use caution when installing Concentric Side Wall Termination Kits when the outdoor design temperature is below 5°F / -15°C. Possible blockage of the combustion air intake increases when the outdoor temperature drops below this temperature.

The clearances recommended by the vent termination manufacturer must be followed.

Approved Concentric Side Wall Termination Kits are listed as follows: (Alternate vent termination kits must be submitted to IBC for approval prior to installation.)

- Centrotherm – Innoflue #ICWT242 (2” termination) + ICTC0224 (2” concentric transition to 2 pipe)
- Centrotherm – Innoflue #ICWT352 (3” termination) + ICTC0335 (3” concentric transition to 2 pipe)
- Duravent – Polypro #3PPS-HK – Horizontal Termination Kit – Concentric
- Ipex - # 197009 – 3" CPVC concentric termination kit
- Ipex - # 196006 – 3” PVC concentric termination kit

VENT TERMINAL CLEARANCE MINIMUMS ARE AS FOLLOWS:

	CANADIAN INSTALLATIONS[1]	US INSTALLATIONS[2]
A= Clearance above grade, veranda, porch, deck, or balcony	12 in (30 cm)	12 in (30 cm)
B= Clearance to window or door that may be opened	6 in (15 cm) for appliances ≤ 10,000 Btuh (3 kW), 12 in (30 cm) for appliances > 10,000 Btuh (3 kW) and ≤ 100,000 Btuh (30 kW), 36 in (91 cm) for appliances ≤100,000 Btuh (30 kW)	6 in (15 cm) for appliances ≤ 10,000 Btuh (3 kW), 9 in (23 cm) for appliances > 10,000 Btuh (3 kW) and ≤ 50,000 Btuh (15 kW), 12 in (30 cm) for appliances > 50,000 Btuh (15 kW)
C= Clearance to window or door that may be opened	*	*
D= Clearance to permanently closed window	*	*

WARNING

In addition to preventing ingestion of chemical contaminants, care must be taken to ensure air intake terminals are not installed in locations where contamination might occur due to ingestion of particulate foreign material (dust, dirt and debris).

WARNING

Intake air openings must be configured such that rain or other forms of moisture cannot enter the air intake piping system. Otherwise serious damage to the boiler may result.

NOTE

Care must be taken when installing air intake piping to ensure that a "trap" is not formed in the piping so as to allow a build-up of water, and blockage of intake air.

Such blockage will result in a boiler safety shut-down.

E= Clearance to unventilated soffit	*	*
F= Clearance to outside corner	*	*
G= Clearance to inside corner	*	*
H= Clearance to each side of center line extended above meter/regulator assembly	3 ft (91 cm) within a height 15 ft above the meter/ regulator assembly	*
I= Clearance to service regulator vent outlet	3 ft (91 cm)	*
J= Clearance to nonmechanical air supply inlet to building or the combustion air inlet to any other appliance	6 in (15 cm) for appliances ≤ 10,000 Btuh (3 kW), 12 in (30 cm) for appliances > 10,000 Btuh (3 kW) and ≤ 100,000 Btuh (30 kW), 36 in (91 cm) for appliances ≤100,000 Btuh (30 kW)	6 in (15 cm) for appliances ≤ 10,000 Btuh (3 kW), 9 in (23 cm) for appliances > 10,000 Btuh (3 kW) and ≤ 50,000 Btuh (15 kW), 12 in (30 cm) for appliances > 50,000 Btuh (15 kW)
K= Clearance to a mechanical air supply inlet	6 feet (1.83 m)	3 ft (91 cm) above if within 10 ft (3 m) horizontally
L= Clearance above paved sidewalk or paved driveway located on public property	7 ft (2.13 m) †	*
M= Clearance under veranda, porch deck, or balcony	12 in (30 cm) ‡	*

1 In accordance with the current CSA B149.1 Natural Gas and Propane Installation Code

2 In accordance with the current ANSI Z223.1 / NFPA 54 National Fuel Gas Code

† A vent shall not terminate directly above a sidewalk or paved driveway that is located between two single family dwellings and serves both dwellings.

‡ Permitted only if veranda, porch, deck, or balcony is fully open on a minimum of two sides beneath the floor.

* Clearance in accordance with local installation codes and the requirements of the gas supplier.

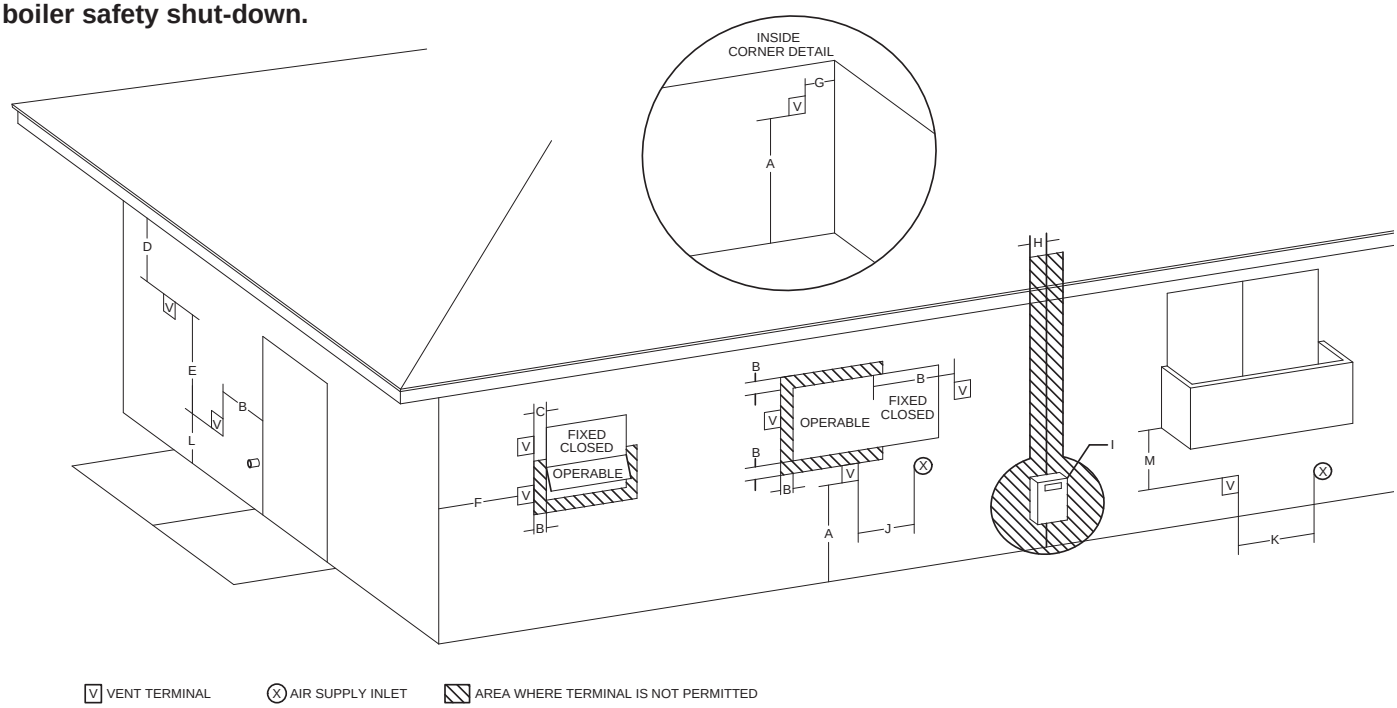

Figure 14: Vent Terminal Clearance

1.4.7 “Direct Vent” Combustion Air Intake Piping

The boiler must always be installed as a Direct Vent venting system with the combustion air piped directly from the outdoors to the boilers combustion air connection. Provisions for combustion and ventilation air in accordance with the section “Air for Combustion and Ventilation,” of the *National Fuel Gas Code, ANSI Z223.1/NFPA 54*, or Clause 8.2, 8.3 or 8.4 of *Natural Gas and Propane Installation Code, CAN/CSA B149.1*, or applicable provisions of the local building codes.

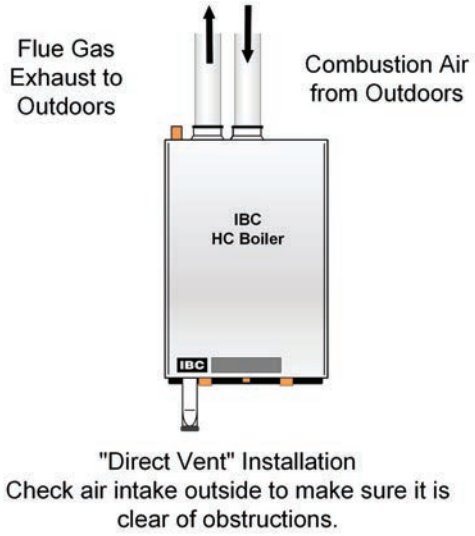

Figure 15: Direct vent combustion air intake

For 3" Flexible PPs, up to 35 actual lineal feet are allowed in a nominally vertical orientation (>45°). The equivalent length of 3" Flexible PPs shall be computed using a multiple of 1.4:1, e.g. 35' x 1.4 = 49' equivalent. The balance of the venting allowance is still available for use with rigid PPs piping material. 2" Flexible PPs is not allowed.

INTAKE PIPE SIZE/FITTINGS	MAXIMUM EQUIVALENT LENGTH
Schedule 40 PVC, ABS, CPVC or PPs – Allowances are for each side separately.	
2"	35'
3"	120'
2" or 3" 90' Long Sweep Vent Elbow	Allow 5 equivalent feet
2" or 3" 90' Short Sweep Vent Elbow	Allow 8 equivalent feet
2" or 3" 45' Vent Elbow	Allow 3 equivalent feet
PPS	
PPs 87-90' Elbow	Allow 8 equivalent feet
Flex PPS	
3" PPs Flex	(Max. 35) actual feet times 1.4

Table 4: Maximum intake piping length.

For the **inlet** air – Schedule 40 PVC, CPVC, ABS or PPs piping of any type is permitted. Use same diameter as Vent pipe.

Combustion air piping is inserted directly into the 3" female stainless steel fitting on the top, right side of the boiler and run horizontally or vertically to the outdoors. Bird screen of 1/4" stainless steel or plastic mesh (eg. IPEX System 636 drain grate for CPVC systems) is useful to guard against foreign objects.

Care must be taken to ensure adequate separation is maintained between the air intake inlet and the vent terminal. Refer to the vent terminal configuration drawings in the Vent Termination section above.

Support should be provided for intake piping, particularly so for horizontal runs (follow local code).

1.4.8 “Indoor Air” Combustion Air Intake

Using Indoor Combustion Air is not approved for use with the HC series boilers.

1.4.10 Closet Installations

For installations in a confined space (such as a closet), ventilation openings may be needed through a door or wall to prevent excessive heat from building up inside the space.

The boiler shall not be exposed to ambient conditions above 122°F (50°C) or below 32°F (0°C).

1.5 CONDENSATE REMOVAL

⚠ WARNING

Fill trap with water before boiler is first fired to prevent exhaust fumes from entering room. Never operate the boiler unless the trap is filled with water.

Failure to comply will result in severe personal injury or death.

IBC's specified vent configuration promotes the safe drainage of moisture from the boiler and exhaust venting without flowing liquids back through the heat exchanger.

Reliable system operation requires (1) proper design and installation of exhaust venting to allow condensate to run back to the drain/trap; (2) acid neutralization as appropriate. To achieve these:

1. Allow for a 1/4" per foot slope back to the vent connection, with appropriate hangers to maintain that gradient.
2. Ensure the supplied trap is correctly installed and filled with water.
3. When required, add (and maintain in good condition) a neutralization tank.

1.5.1 Condensate Trap

A condensate trap must be installed on the drain connection at the base of the boiler as shown in *Figure 18.*

1.5.2 Condensate Trap Assembly - Installation

1. Undo Drain Spout Compression Nut, remove Drain Hose from Trap Drain Outlet. Remove Upper Compression Nut and Washer and slide over Boiler Drain Outlet (A). Insert one Trap Hook barb into the back mounting hole.

Figure 17: Condensate Trap, disassembled

⚠ WARNING

The Trap Hook must be installed as instructed and all trap fittings must be tightened as instructed to prevent leakage of flue gasses.

Failure to comply may result in severe personal injury or death.

2. ***Fill Trap with water,*** and slide Trap Body over Boiler Drain Outlet (A). Swing Trap Hook (B) around the Drain Outlet connection threads. Insert remaining Trap Hook barb into the front hole. Pull the trap slightly downward to seat it against the hook and tighten Upper Compression nut.
3. Attach Drain Hose and tighten Drain Spout Compression Nut.

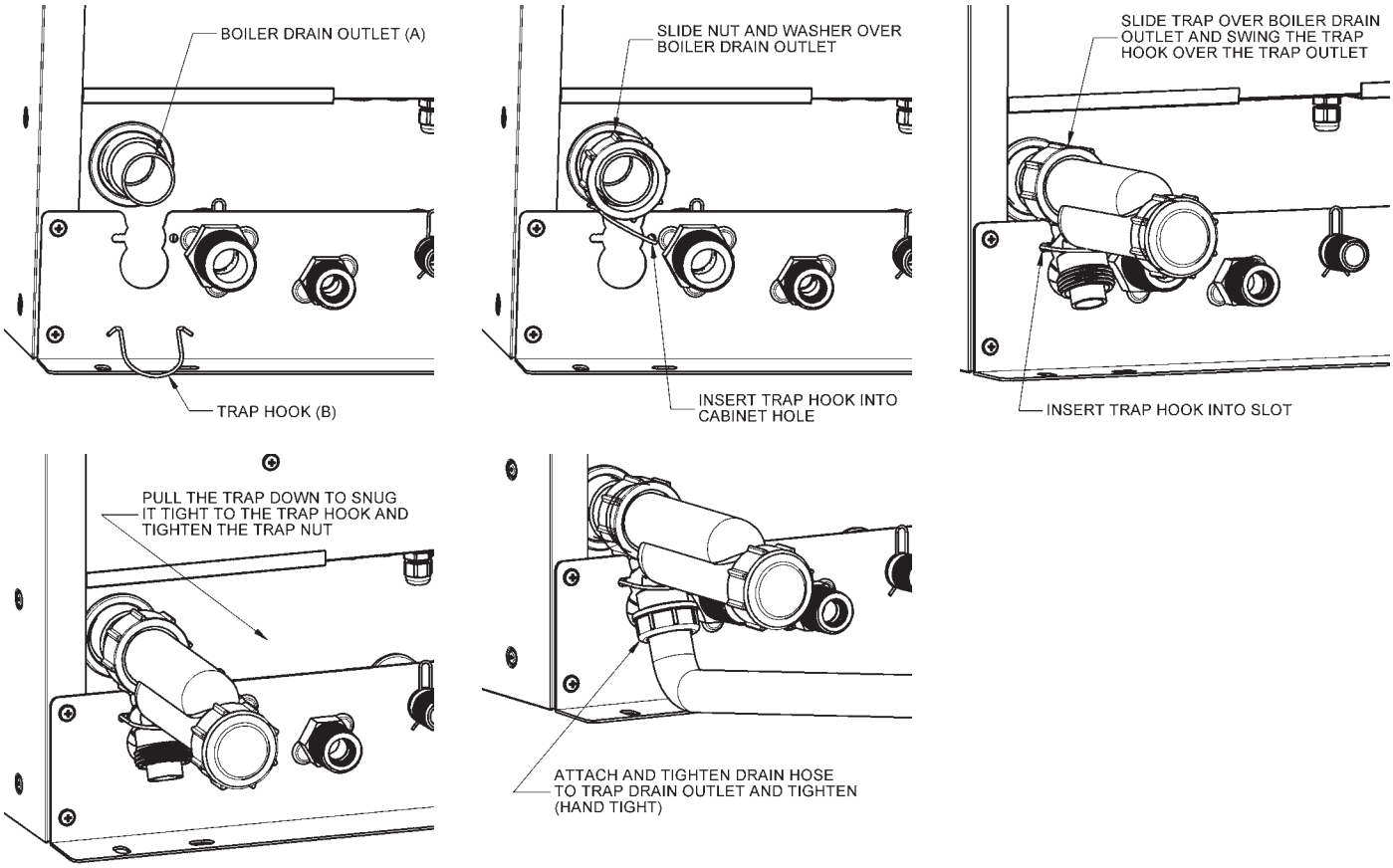

Figure 18: Condensate trap installation

⚠ NOTE

It is the responsibility of the installing and/or service Contractor to advise and instruct the end User in how to perform the Trap cleaning procedure, and to advise that the Trap be checked at least every two months and cleaned as required.

1.5.3 Condensate Trap Assembly - cleaning procedure

1. Turn off the power to the boiler and allow it to cool down.
2. Remove the trap from the boiler (reverse the installation procedure above).
3. Remove the Trap Cleanout Assembly, from the Trap Body and clean and flush the debris out.
4. Re-assemble trap components, re-fill trap, and replace on boiler as described in the installation instructions above.

1.5.4 Further installation details

- Condensate drain must be piped to within 1" of a drain or be connected to a condensate pump.
- Drainage line must slope down to the drain at a pitch of 1/4" per foot so condensate runs towards the drain.
- Condensate traps should be checked every 2 months, and cleaned and refilled as necessary.

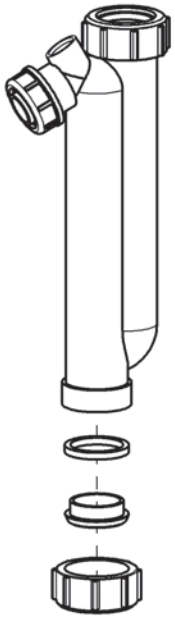

Figure 19: Condensate trap disassembly for cleaning

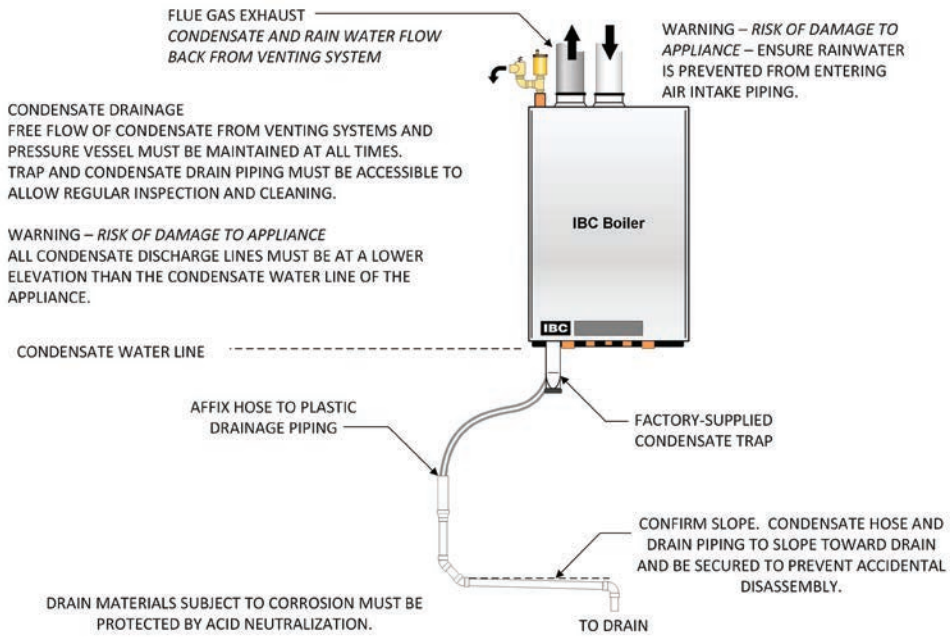

Figure 20: Condensate trap drainage

⚠ WARNING

If condensates are to be discharged into building drain piping materials that are subject to corrosion, a neutralization package must be used.

⚠ DANGER

The water in the condensate neutralizer can cause severe burns to the skin. Use extreme caution when servicing the condensate neutralizer. Wear protective gloves and eyewear.

⚠ CAUTION

When a condensate neutralization package is installed, the pH of the condensate discharge must be measured on a regular schedule to ensure the neutralizing agent is active and effective.

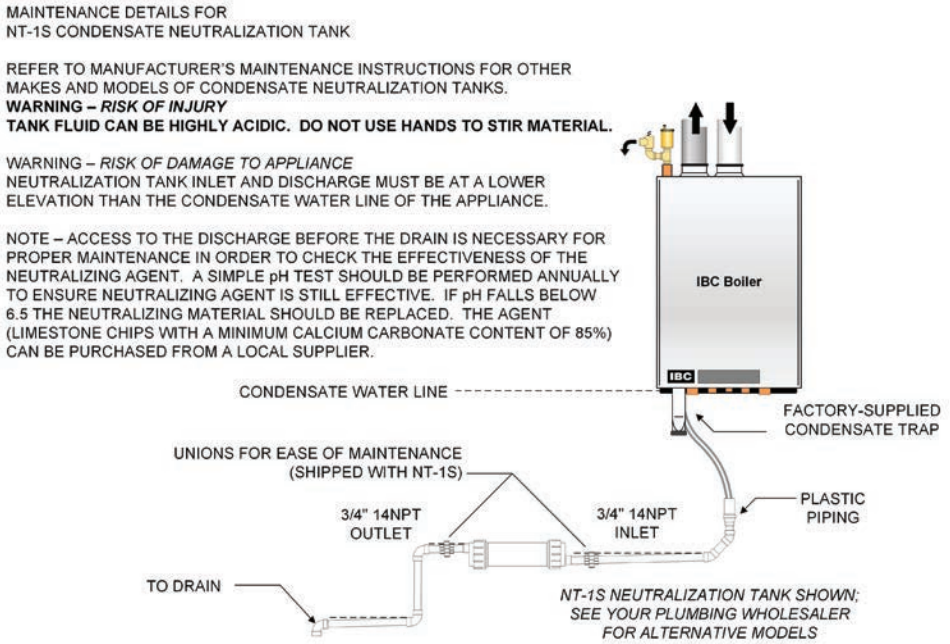

Figure 21: Condensate neutralization tank

1.6 WATER PIPING - SPACE HEATING

1.6.1 General Piping Considerations

The HC series boilers include a factory installed, integral Grundfos UP 15/58 heating pump. The pump is designed to provide adequate flow through the boiler and near boiler piping. The pump is pre wired.

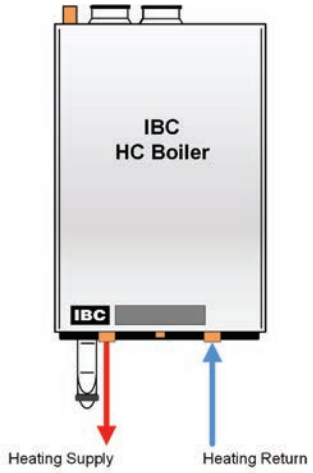

Figure 22: Overview of piping options

Primary/secondary piping or the use of a buffer tank / hydraulic separator is recommended for maximum flexibility in multi zone/load applications. Piping loads in parallel is only acceptable in systems where the minimum flow rate is guaranteed to be higher than the minimum for the boiler and the boilers pump is adequate to provide the required flow rate and pump head for the system.

There are some important details to consider however, and this section of the Installation and Operating Manual will walk you through them so you can enjoy a trouble-free installation.

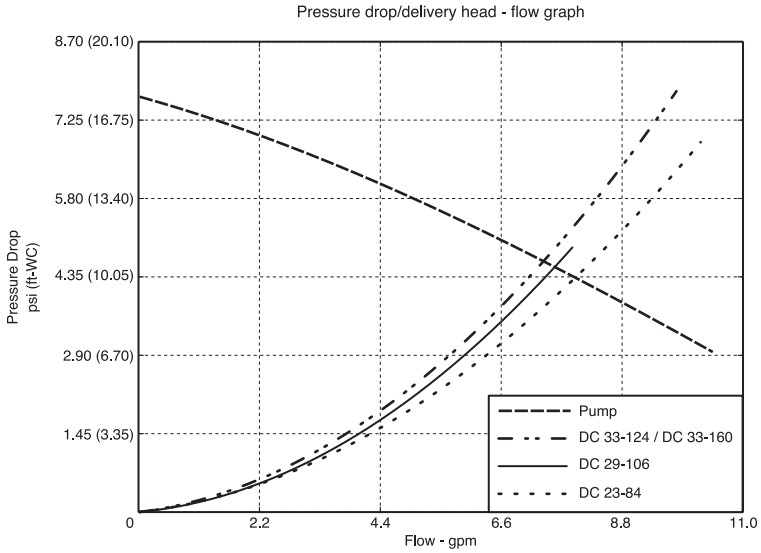

Table 5

⚠ WARNING

During operation, the relief valve may discharge large amounts of steam and/or hot water. Therefore, to reduce the potential for bodily injury and property damage, a discharge line MUST be installed that it:

1. **is connected from the valve outlet with no intervening valve and directed downward to a safe point of discharge.**
2. **allows complete drainage of both the valve and the discharge line.**
3. **is independently supported and securely anchored so as to avoid applied stress on the valve.**
4. **is as short and straight as possible**
5. **terminates freely to atmosphere where any discharge will be clearly visible and is at no risk of freezing.**
6. **terminates with a plain end which is not threaded.**
7. **is constructed of a material suitable for exposure to temperatures of 375°F or greater.**
8. **is, over its entire length, of a pipe size equal to or greater than that of the valve outlet.**

DO NOT CAP, PLUG OR OTHERWISE OBSTRUCT THE DISCHARGE PIPE OUTLET!

⚠ CAUTION

Installers should inquire of local water purveyors as to the suitability of their supply for use in hydronic heating systems. If water quality is questionable, a local water treatment expert must be consulted for testing, assessment and, if required, treatment.

Alternatively, water or hydronic fluid of known quality can be brought to the site.

The HC series modulating boilers are designed for use within a closed loop, forced circulation, low pressure system. A 30 PSI pressure relief valve (3/4" NPT) is supplied for field installation at the boilers top connection point. A Relief Valve and Air Vent Piping Kit is also included with each HC series boiler to aid in the proper installation of the relief valve and air vent.

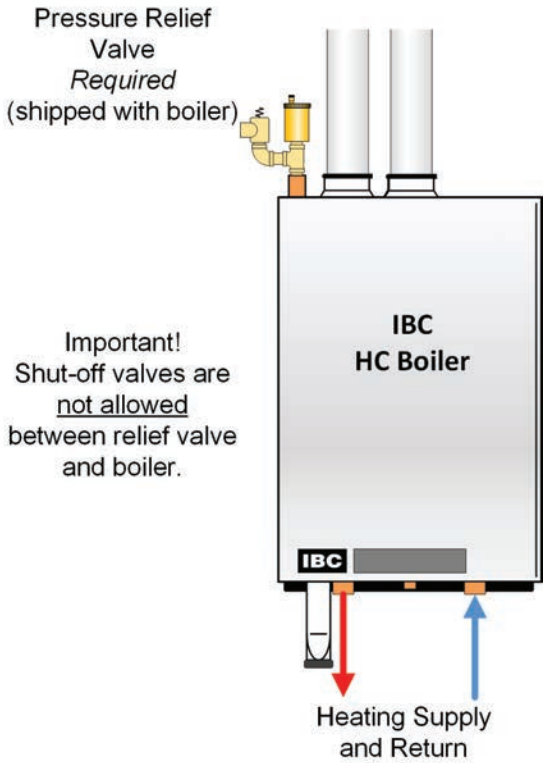

Figure 23: Relief Piping

System piping is connected to the boiler using the 1" NPT Male threaded fittings located on the bottom of the boilers. Unions and gate or ball valves at the boilers supply and return water connections are recommended to simplify servicing. Un-insulated hot water pipes must be installed with a minimum 1/4" clearance from combustible materials.

Fluid fill is most often accomplished by using a boiler regulator & fill valve set at 12 psig or more, with appropriate backflow prevention device as required by local code. This is acceptable in areas where municipal water or well water has been treated and filtered to remove excessive minerals and sediment, and water chemistry is known to be suitable for closed loop hydronic systems. In areas where water quality is in question, or when chemical treatment or glycol is required, other options should be considered. Follow applicable Codes and good piping practice.

There are a number of boiler feed and pressurization devices on the market today that may be a better choice than a raw water fill from the mains. When regular maintenance requires relief valve blow-off, the discharge may be directed back into the pressurization unit for recycling of boiler fluid and chemicals back into the system. In buildings that may be unoccupied for long periods of time, pressurization units are useful to prevent flood damage should leakage occur from any component in the system. An additional benefit is that backflow prevention devices are not required when using these devices.

WARNING

Close fill valve after any addition of water to the system, to reduce risk of water escapement.

NOTE

Application drawings can be downloaded from our web site.

www.ibcboiler.com

NOTE

The boiler, when used in connection with a refrigeration system, must be installed so the chilled medium is piped in parallel with the boiler with appropriate valves to prevent the chilled medium from entering the boiler.

NOTE

The boiler piping system of a hot water boiler connected to heating coils located in air handling units where they may be exposed to refrigerated air circulation must be equipped with flow control valves or other automatic means to prevent gravity circulation of the boiler water during the cooling cycle.

WARNING

Ensure the gas ignition system components are protected from water (dripping, spraying, rain, etc.) during appliance operation and when servicing (pump replacement, condensate trap servicing, control replacement, etc.)

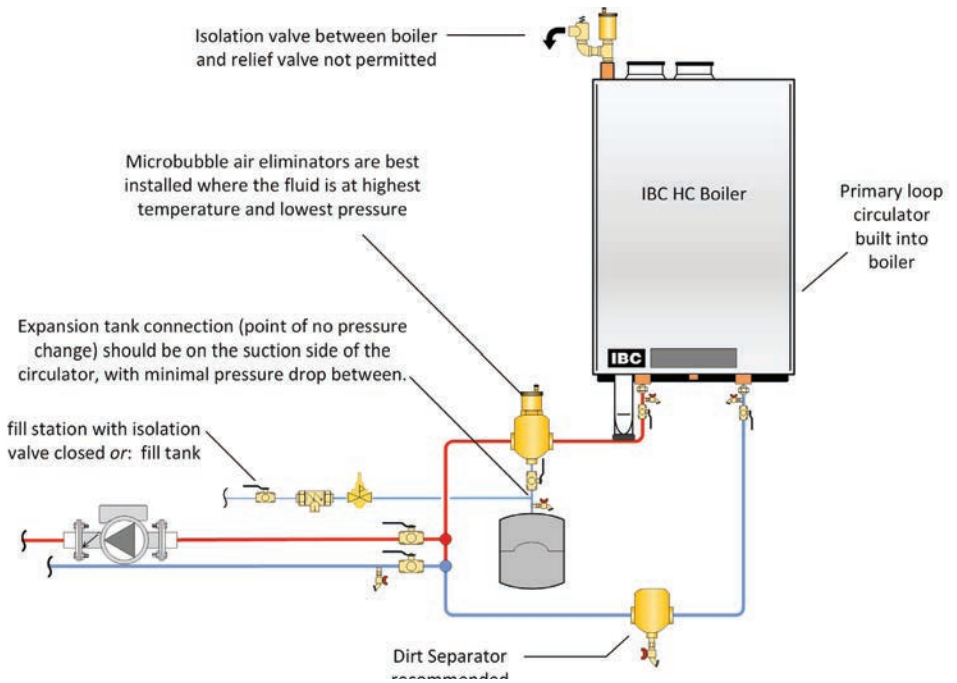

Figure 24: Boiler trim basic options – concept drawing. This drawing is only a simple schematic guide.

Do not place any water connections overhead the boiler; leaks can damage the fan and controls. If needed, create a shield over the top of the cover, but allow clearance for airflow and service access.

For best results, use a *Primary: Secondary* piping system, with a boiler loop using 1" (1-1/4" for the HC 33-160) piping for the HC Series Boilers. The boiler comes with the boiler (primary) pump installed in the boiler and will provide adequate flow for the boiler and primary loop piping only.

The minimum flow rate required through the heat exchanger is 2 USgpm with a maximum of 11 USgpm allowed. Primary/Secondary piping ensures adequate flow and de-couples Δ°T issues (boiler vs. distribution). Aim for a 20° to 30° F Δ°T across the heat exchanger at high fire.

The HC Series modulating boilers are designed to supply the heating load with temperatures within the range of 86°F to 194°F. Use closely spaced tee's to connect each pumped space heating load to the primary loop. As an option, a hydraulic separator or buffer tank can be used to separate the heating loads from the boiler.

Ensure the pump is rated for the design circulating water temperatures; some pumps have a minimum water temperature rating above the low temperature potential of the boiler. Following installation, confirm actual performance by measuring Δ°T (under high and low flow conditions) after establishing the correct firing rate.

A variety of application drawings showing basic design options are available from the IBC web site at ***www.ibcboiler.com***

⚠ WARNING

Water quality has a significant impact on the lifetime and performance of an IBC Boiler heat exchanger.

Improperly prepared water in a heating circuit may cause damage to the heat exchanger through corrosion or fouling. Repeated or uncontrolled water fills will increase the potential for damage.

High levels of dissolved solids or minerals may precipitate out of the fluid onto the hottest part of the heat exchanger, impairing heat transfer and resulting in overheating and premature failure. The amount of solids that may form on the heat exchanger will depend on the degree of hardness and the total water volume in the system. A high water volume system with a low hardness count may cause as much damage as a system with less volume and higher hardness, so it is recommended to treat water so as to remove all dissolved solids. Other water chemistry allowable limits are as follows:

- **Acidity pH is to be between 6.5 and 8.5**
- **Chloride is to be less than 125 mg/l**
- **Iron is to be less than 0.3 mg/l**
- **Cu less than 0.1 mg/l**
- **Conductivity is to be less than 400µS/cm (at 25°C)**
- **Hardness is to be 7 Grains or less**

IMPORTANT: Ensure that these limits are acceptable for the other water-side components in the system.

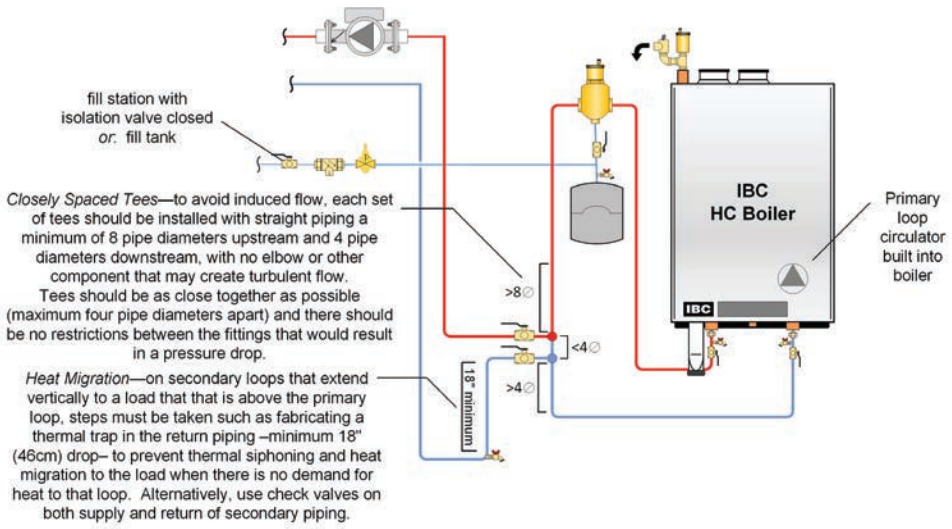

Figure 25: Basic Primary/Secondary piping with closely-spaced tees concept – concept drawing. This drawing is only a simple schematic guide.

We recommend water flow after burner shutdown to utilize legacy heat – this is significant due to the mass of the heat exchanger. The boiler pump is under the control of the boiler to allow pump purge after burner shut-down. Default software values will run the boiler's pump for 1 minute after the burner shuts down.

Schematics for several piping layouts are provided herein, and additional drawings are available at **www.ibcboiler.com**. Installers shall conform the piping design to one of the provided configurations to simplify the control application, promote good loads and flow management.

Propylene glycol solution is commonly used in a closed loop where freeze protection is required. Its density is lower than that of water, resulting in lower thermal performance at a given flow and pressure. As a rule of thumb, a 50%:50% solution of propylene glycol and water will require an increased system circulation rate (gpm up 10%), and system head (up 20%) to provide performance equivalent to straight water.

The HC series modulating boilers offer exceptional matching of heat generation to radiation. The low minimum firing is better suited to low thermal loads presented in a typical multi-zoned radiation system. However, where individual zones in a heating system have loads under 10,000 Btu/hr, the system will still benefit through use of a buffer tank to ensure a controlled supply temperature, and to prevent short cycling. Buffering should be added on the secondary piping of the relevant load, to avoid bulking up the thermal mass of the primary piping circuit (and potentially lengthen the duration of the transition from hot to cool loads).

HC modulating series boilers can be connected directly to a floor of non-oxygen barrier polybutylene material (PB tubing). The internal boiler piping, and connections are all non-ferrous with the exception of the corrosion resistant epoxy coated cast iron pump. For maintenance of warranty on such systems, we require evidence of a thorough flushing of all loops, plus installation of a dirt separator or side stream filter. A separator/filter maintenance routine shall be carried out after the retrofit, with filter clearing after the 1st day, 1st week, month and annually thereafter. **The installer must insure that all external piping components and pumps are non-ferrous when connecting the boiler to a system with non-oxygen barrier tubing.**

1.6.2 Basic Heating Piping Arrangements

PRIMARY / SECONDARY PIPING - BENEFITS AND INSTALLATION RULES

1. Good circulating water flow through the boiler irrespective of load or radiation system head
2. Allows flexible ΔT° control in secondary loops
3. Adds to the system's thermal buffering, to assist in handling small loads and temperature transition.

A Primary / Secondary piping configuration requires an extra pump, independant from any secondary load pumps. The HC series modulating boiler includes the boiler Primary Pump installed inside the boiler cabinet and is pre-wired. The pump's volute is epoxy coated to allow compatibility with the non-oxygen barrier tubing found in some older radiant heating systems.

For optimal performance, place pumps on the supply side of secondary loops to facilitate air evacuation. Use pumps with internal check valves to avoid ghost flows and thermal siphoning.

The HC series boilers are designed to be piped in a Primary/Secondary piping arrangement. In some cases the boiler can be piped in series with the heating load if the boiler's pump is capable of providing the flow and head the system requires. For example a HC series boiler and an IBC Air Handler series can be installed together without the use of an additional pump if the air handler is installed within close proximity of the boiler and with properly sized supply and return piping (*see figure 29a*).

Propylene Glycol mixtures of 25% - 50% are acceptable for use within the boiler and piping system. In general, the use of propylene glycol will reduce the heating capacity of the heating system and increases the pump head required for adequate boiler flow.

If the installation involves small loads, as in typical zoned baseboard heating applications, use of a buffer tank is recommended. To aid in temperature transition from hot to cool loads, a 3-way mixing valve can be placed at the entrance to the cool load (this will also provide floor protection). This will permit immediate circulation of mixed flow into the cool loop.

⚠ WARNING

Do not use automotive-type ethylene or other types of automotive glycol antifreeze, or undiluted antifreeze of any kind. This may result in severe boiler damage. It is the responsibility of the Installer to ensure that glycol solutions are formulated to inhibit corrosion in hydronic heating systems of mixed materials. Improper mixtures and chemical additives may cause damage to ferrous and non-ferrous components as well as non-metallic, wetted components, normally found in hydronic systems. Ethylene glycol is toxic, and may be prohibited for use by codes applicable to your installation location. For environmental and toxicity reasons, IBC recommends only using non-toxic propylene glycol.

NOTE

The piping drawings in this manual are simple schematic guides to a successful installation. There are many necessary components not shown, and details such as thermal traps are left out so the drawings have greater clarity. We require that our boilers be installed by licensed and experienced trades people who are familiar with the applicable local and national codes. System design is to be completed by an experienced hydronic designer or Engineer. It is necessary to carefully read and follow these installation instructions along with the application drawing that fits your system.

MULTIPLE BOILER PIPING - BENEFITS AND INSTALLATION RULES

Multiple IBC HC Series boilers can be installed in a single heating system to provide redundancy, increased output, and greater heating plant turn-down capabilities. Primary/Secondary piping must be employed. This approach provides constant head and flow at each boiler, regardless of flow variations in the main building loop.

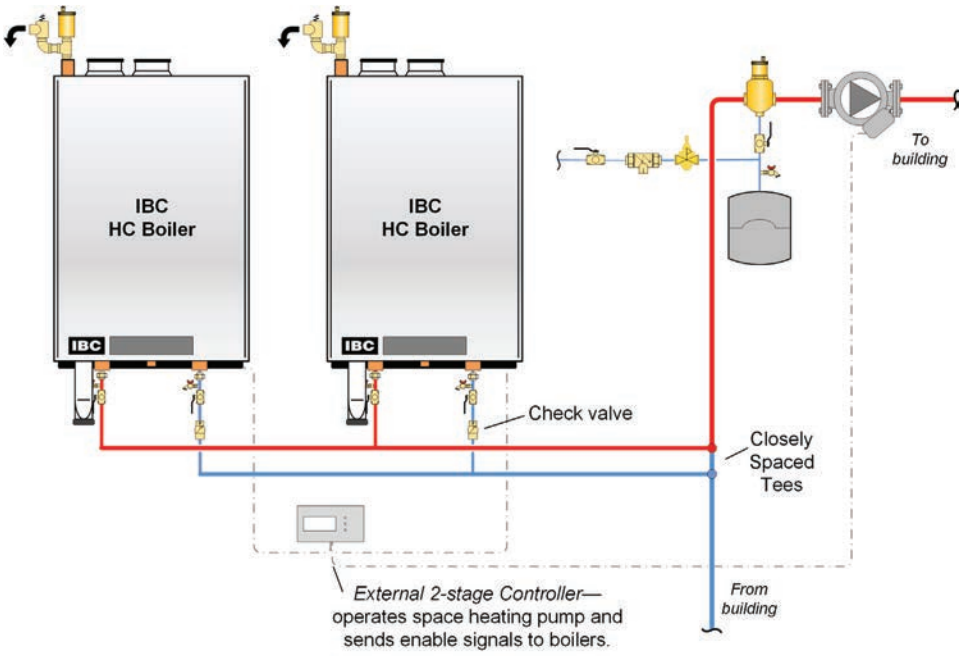

Figure 26: Multiple boiler piping concept – concept drawing. This drawing is only a simple schematic guide.

Each boiler will control its own pump, turning it off or on when heat is required. This approach saves electricity by reducing the pumping power required as load conditions are reduced. A multiple boiler system can be controlled by installing an external boiler staging controller with dry contacts for each boiler. These controllers are available from your local heating wholesaler.

Check valves are to be used in each boilers piping to prevent reverse flow when the boiler is off.

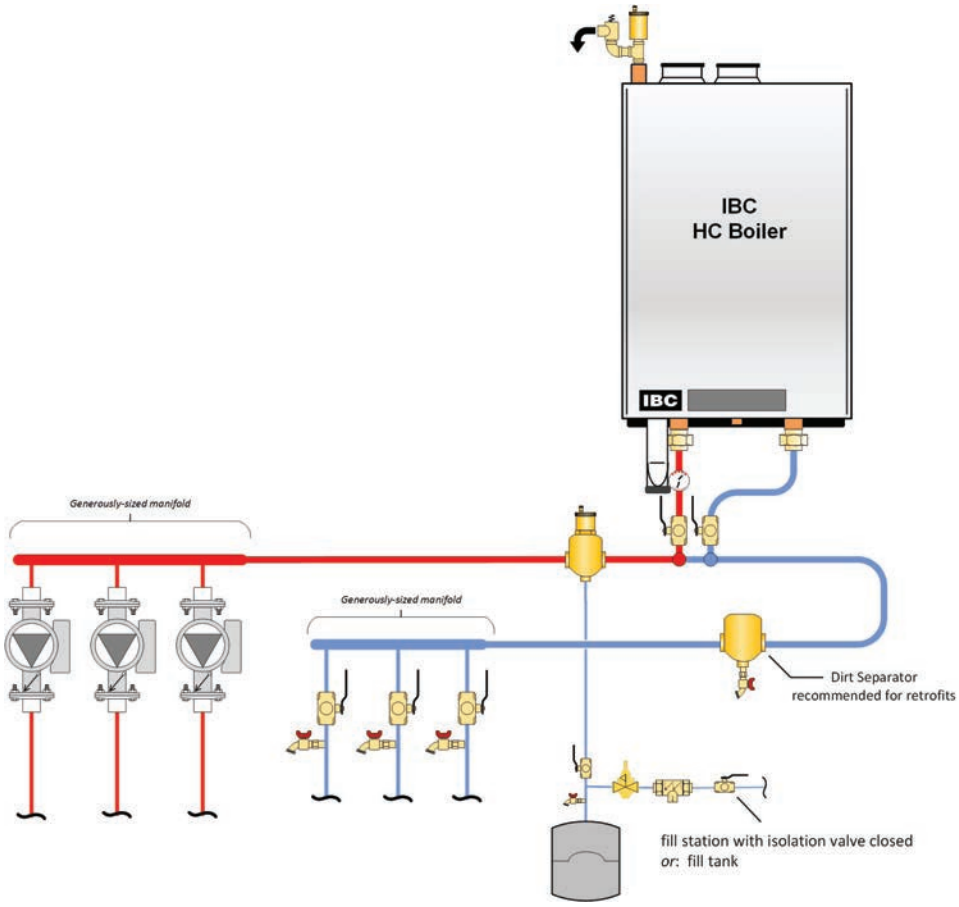

Figure 26a: EZ Manifold Concept Drawing

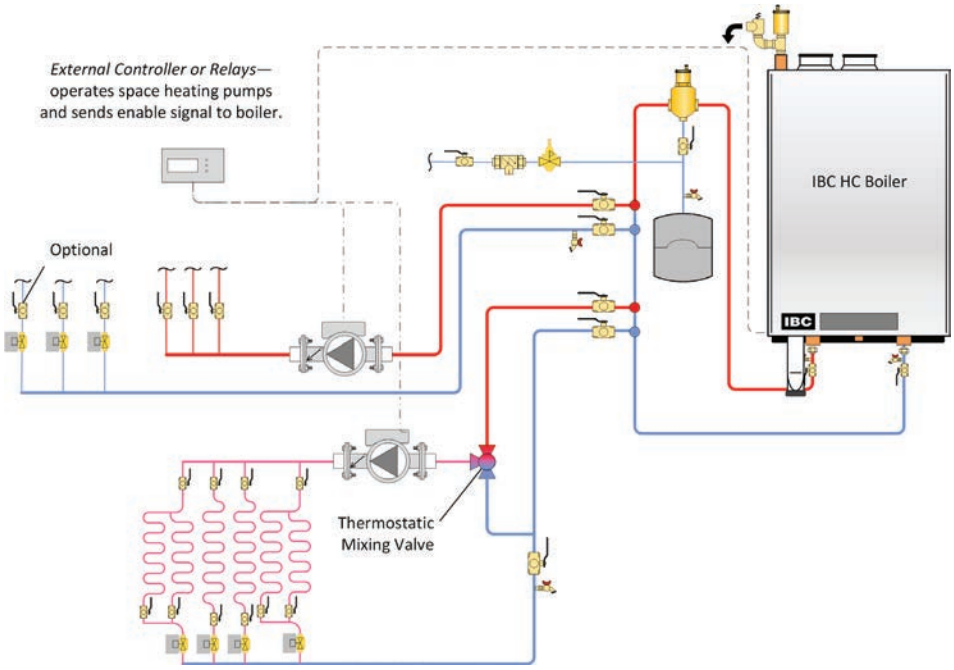

Figure 27: Typical two temperature space heating piping concept with direct domestic hot water – concept drawing. This drawing is only a simple schematic guide.

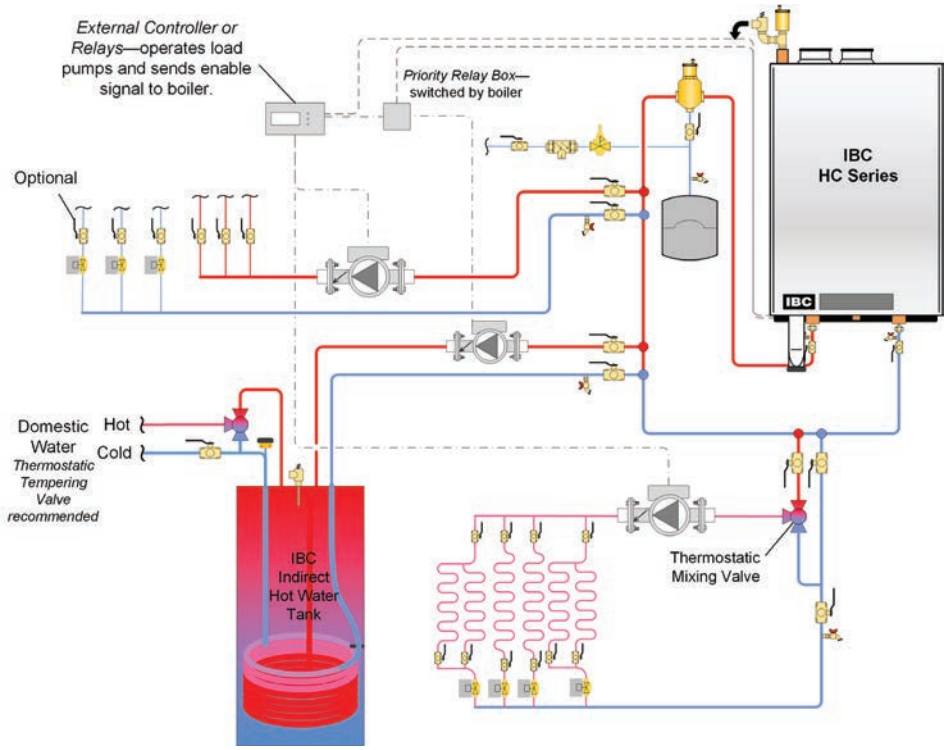

Figure 28: Typical two temperature space heating piping concept with indirect domestic hot water – concept drawing. This drawing is only a simple schematic guide.

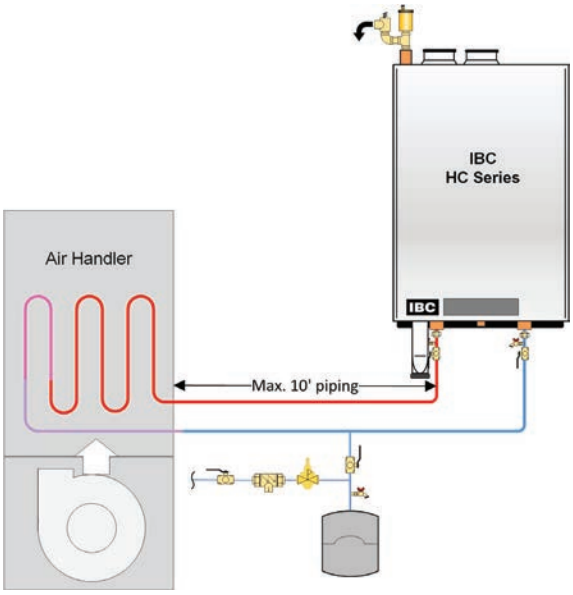

Figure 29a: Air handler and direct domestic hot water – parallel piping concept drawing. This drawing is only a simple schematic guide.

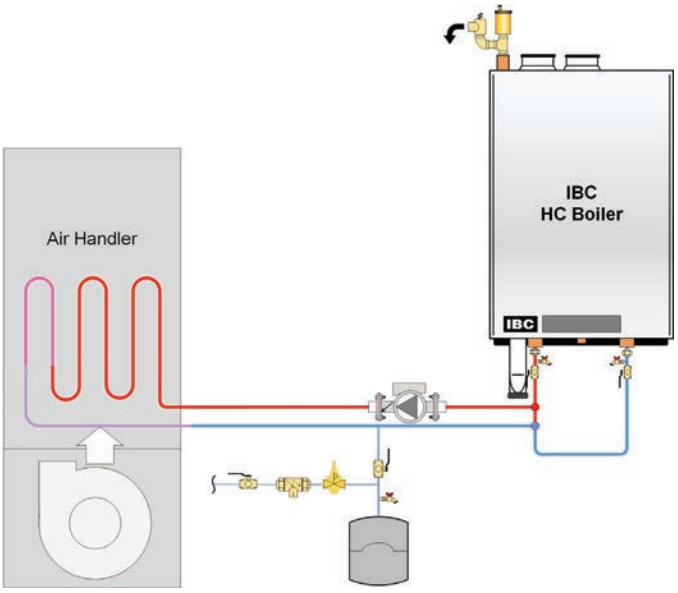

Figure 29b: Air handler and direct domestic hot water – primary/secondary concept drawing. This drawing is only a simple schematic guide.

1.7 GAS PIPING

WARNING

This boiler model can burn either Natural gas or Propane. Refer to section 3.3 for further instruction.

If a boiler is to be converted from one fuel to another, a conversion kit must be ordered prior to the conversion. The conversion kit must be installed according to the detailed instructions supplied with the kit.

Failure to perform the required fuel conversion correctly can result in serious injury or death.

NOTE

It is essential to check gas supply pressure to each boiler with a manometer or other high-quality precision measuring device. Pressure should be monitored before firing the boiler, when the regulator is in a "lock-up" condition and during operation, throughout the boiler's full modulation range.

Pay special attention to retrofit situations where existing regulators may have an over-sized orifice and/or worn seats, causing pressure "creep" and high lock up pressures.

The boiler should normally have an inlet gas pressure of at least 7.0" w.c. for natural gas and 11" w.c. for propane gas. For either fuel, the inlet pressure shall be no greater than 14.0" w.c. Confirm this pressure range is available with your local gas supplier.

The inlet gas connection of the boiler's gas valve is 1/2" NPT (male).

Adequate gas supply piping shall be provided with no smaller than 1/2" Iron Pipe Size (e.g. Iron Pipe Size (IPS) and using a 1" w.c. pressure drop, in accordance with the following chart:

MODEL	1/2" IPS	3/4" IPS	1" IPS
HC Series (Natural Gas)	20'	70'	200'
HC Series (Propane)	50'	200'	600'

Table 6: Maximum Pipe Length (ft) – HC series 33-160 boiler

Gas piping must have a sediment trap ahead of the boiler's gas valve *(see Figure 31).* A manual shutoff valve must be located outside the boiler, in accordance with local codes/standards. All threaded joints in gas piping should be made with an approved piping compound resistant to the action of natural gas/propane. Use proper hangers to support gas supply piping as per applicable codes.

The boiler must be disconnected or otherwise isolated from the gas supply during any pressure testing of the system at test pressures in excess of 1/2 psig. Dissipate test pressure prior to reconnecting. The boiler and its gas piping shall be leak tested before being placed into operation.

- The boiler and its individual shutoff valve must be disconnected from the gas supply piping system during any pressure testing of that system at test pressures in excess of 1/2 psi (3.5 kPa).
- The boiler must be isolated from the gas supply piping system by closing, disconnecting and capping its individual manual shutoff valve during any pressure testing of the gas supply piping system at test pressures equal to or greater than 1/2 psi (3.5 kPa).

The gas valve is provided with pressure taps to measure gas pressure upstream (supply pressure) and downstream (manifold pressure) of the gas valve *(see Figure 30).* Note that manifold pressure varies slightly in accordance with firing rates with the modulating series boilers, but will always be close to 0" w.c.

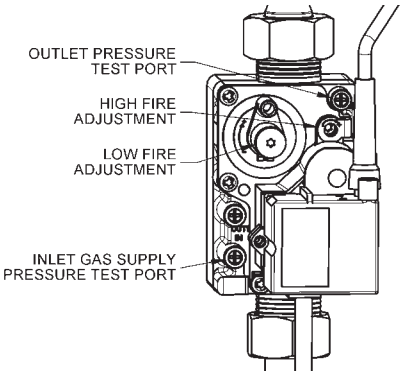

Figure 30: Gas Valve

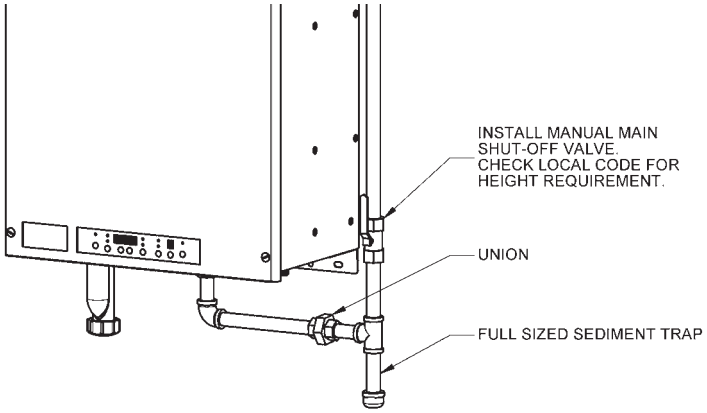

Figure 31: Gas Piping

1.8 ELECTRICAL CONNECTIONS

NOTE

Some features of the control are not available with the HC Series boilers. The Direct Domestic Hot Water functions are not available however the Indirect Domestic Hot Water functions are available.

NOTE

The IBC boiler (like any modern appliance that contains electronic equipment), must have a "clean" power supply, and can be disabled by power surges and spikes, lightning strikes and other forms of severe electrical "noise". Power conditioning equipment (surge protectors, APC or UPS devices) may be required in areas where power quality is suspect.

WARNING

Do not apply power to any connection point on the controllers terminal strips. A potentially hazardous situation could occur which must be avoided to prevent possible serious injury or death.

NOTE

The IBC control only recognizes a true dry contact closure as a call for heat. Thermostats and other devices that use a "Triac" output cannot be used as a call for heat without the installation of an intervening relay with dry contacts to connect to the IBC terminal strip.

All Electrical wiring to the boiler (including grounding) must conform to local electrical codes and/or National Electrical Code, ANS/NFPA No. 70 – latest edition, or The Canadian Electrical Code, C22.1 - Part 1.

If an external electrical source is utilized, the boiler, when installed, must be electrically bonded to ground in accordance with the requirements of the authority having jurisdiction or, in the absence of such requirements, with the *National Electrical Code, ANSI/NFPA 70, and/or the Canadian Electrical Code Part I, CSA C22.1, Electrical Code.*

1.8.1 120VAC Line Voltage Hook-up

Line-voltage wiring is done within the field-wiring box. *(Refer to Section 6.2.Wiring Diagram on page 6-4).* Connect the boiler to the grid power using a separate, fused circuit and on/off switch within sight of the boiler. Use 14-gauge wire in BX cable or conduit properly anchored to the boiler case for mains supply and pump circuits.

The boiler is equipped with 3 x 1/2" electrical knock-outs located behind the power supply terminal strip.

Connect the 120 VAC /15 amp power supply to the AC in connections located to the right side of the controller. To access the terminal strip, remove the boiler cover and slide open the controller drawer. Ensure 120 VAC polarity is correct and that the boiler is properly grounded.

The HC Series boilers include a factory installed and pre-wired pump. The pump is intended to supply adequate flow for the boiler's primary heating circuit only. The system heating pump will need to be switched through a separate relay or control box.

A second set of contacts is available to connect a DHW pump. This pump will allow the connection of an indirect fired storage water heater to heating circuit to take full advantage of the boilers heating capacity. The maximum amperage rating of the connected pump is 1.0 amps. If the connected pump has a rating higher than 1.0 amps, an external isolation relay is required to protect the boilers controller.

A field supplied, external safety device can be connected to the boiler by connecting the safety device in series with the boilers 120 VAC power supply. Ensure the external safety device is rated to accept 120 VAC and the total load connected to the boiler. For an interlock designed for the sole purpose of protecting the heating circuit of the boiler, the Auxiliary Safety interlocks can be wired in series with the Call for heat (X4.6 and X4.7). Do not apply power to the X4 terminal strip. The Auxiliary Safety interlocks must be a Dry Contact.

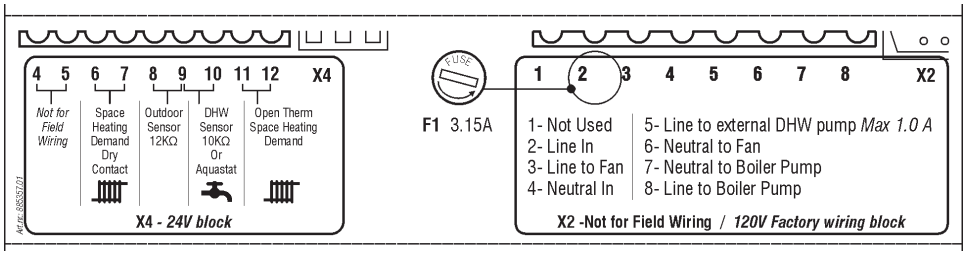

Figure: 32: X4 Terminal Strip for connection of the DHW Aquastat (optional), Thermostat or end switch's (mandatory), Outdoor Sensor (optional)

NOTE

A hot water boiler installed above radiation level or as required by the Authority Having Jurisdiction, must be provided with a low water cut-off device at the time of boiler installation. If a low water cut-off is not factory installed, instructions shall be provided for the installation and wiring of a low water cut-off.

EXTERNAL PROBE TYPE LOW WATER CUT OFF DEVICE

If an external low water cut-off device is required, an electronic probe style device is recommended.

- The probe type low water cut-off device must be installed in the boiler supply water piping, with a tee connection, at a level above the top of the boiler.
- The probe type low water cut-off device must be wired in series with the 120Vac power supply so that when the device trips on a low water condition the power supply to the boiler is interrupted.

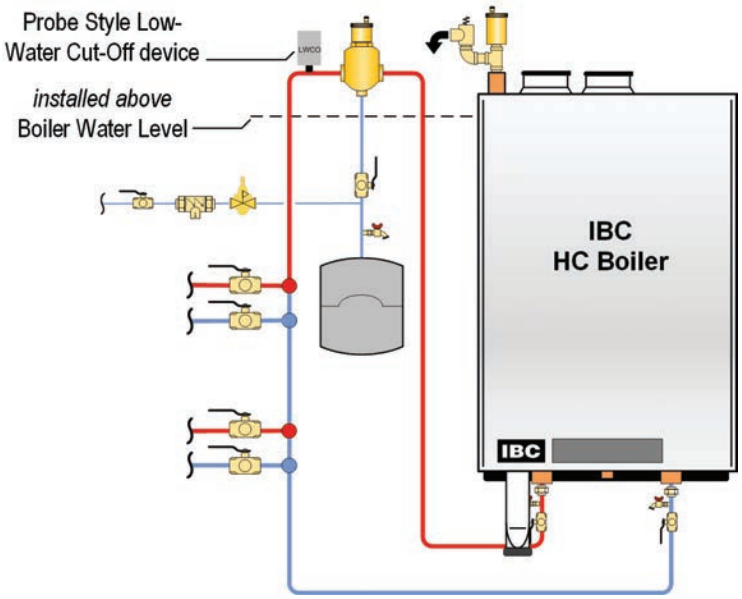

Figure 34: External Probe Type Low Water Cut Off Device

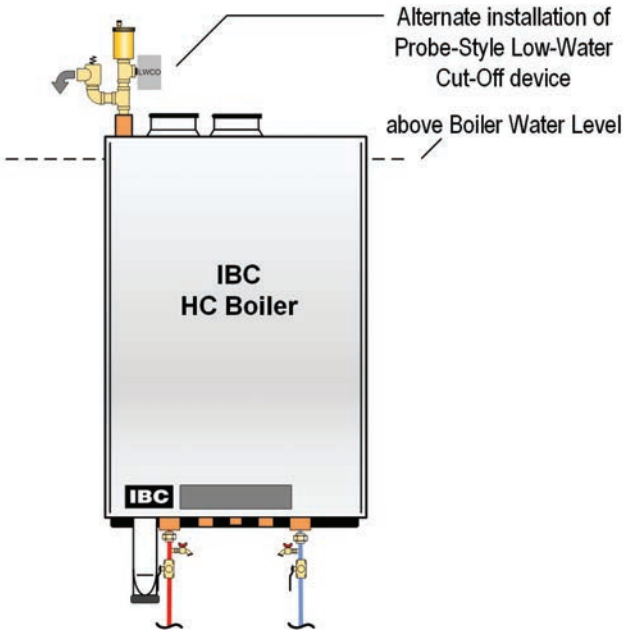

Figure 34a: Alternate Probe Type Low Water Cut Off Device Location

1.8.2 Power Quality and Electrical Protection

In areas of unreliable power, appropriate surge protectors and or power conditioning equipment should be installed to protect the boiler.

1.8.3 Zone Valve and Zone Pump Connections

Zoning can be accomplished with either zone pumps or zone valves. In either case the controls and relays that may be required to accomplish this will need to be installed externally.

Zone Valve end switches can be wired to together in parallel and connected to a fan center relay. *See Figure 36 and 37.* Do not apply power to the X4 terminal strip. Alternately the zone valves and thermostats can be connected to a zoning panel control system available from your local heating wholesaler.

Zone Pumps can be connected to the boiler with a zone pump control available from your local heating wholesaler.

1.8.4 Thermostat / Sensor Wiring

A Thermostat from a single zone heating system can be connected directly to the controller's terminals X4.6 and X4.7. Do not apply power to the X4 terminal strip.

The Outdoor Sensor is not required for the boiler to operate. If the outdoor sensor is not connected, the boiler will operate at the designated maximum space heating water temperature. If outdoor reset functionality and the Summer Shut Down feature is required then the Outdoor Sensor must be connected to X4.8 and X4.9. The Outdoor Sensor is a 12K ohm thermistor type sensor. The sensor should be installed on the exterior of the building on the north side. The sensor should be installed so that it is not effected by any heat sources from the building such as a dryer or exhaust fan outlet, relief air or combustion air grill above a window or door, or mounted directly under a deck or soffit overhang.

DHW Aquastat or 10KΩ sensor can be connected to the controller's terminals X4.9 and X4.10. Do not apply power to the X4 terminal strip.

HC series Schematic Wiring Diagram

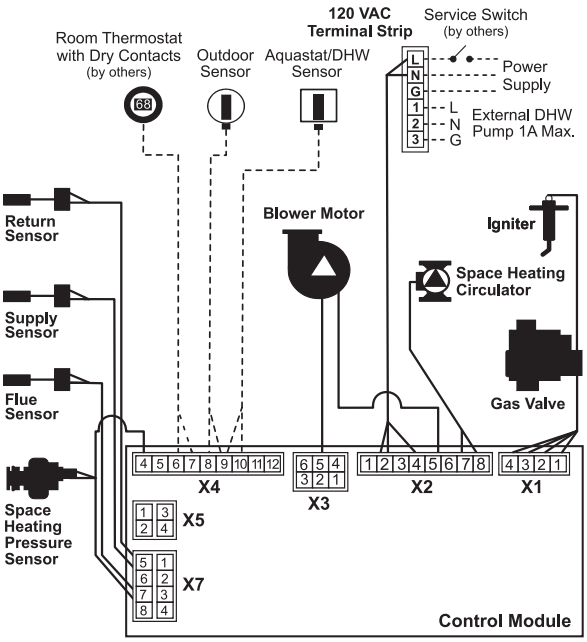

HC series Ladder Wiring Diagram

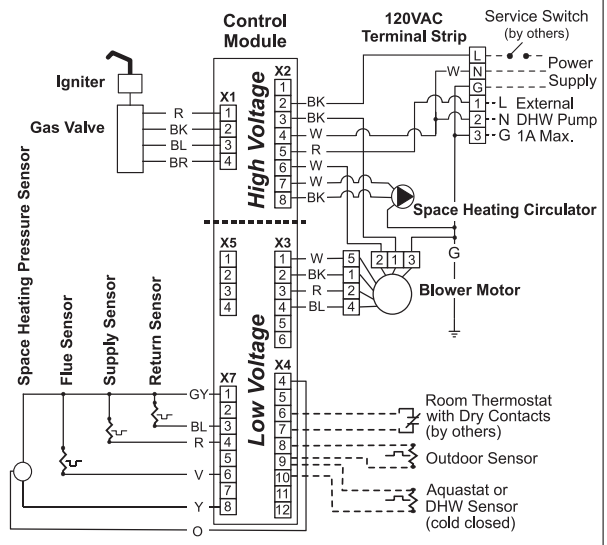

Notes:
- Original wire as supplied with the appliance must be replaced with type T wire or its equivalent.
- The wiring for 120V field connections to the appliance shall have a minimum size of 14 AWG and a temperature rating of at least 194°F (90°C).

Wire Color Code Key
BK - Black
W - White
G - Green
BL - Blue
R - Red
O - Orange
V - Violet
Y - Yellow
BR - Brown
GY - Gray

Wire Terminal Key
——— Factory Wiring
------ Field Wiring

120V Wire Terminal Key
L - Incoming Supply L
N - Incoming Supply N
G - Incoming Supply G
1 - Lp (1A max.)
2 - N
3 - G

24V X4 Wire Terminal Key
X4-6 - Thermostat
X4-7 - Thermostat
X4-8 - Outdoor Sensor
X4-9 - Outdoor Sensor
X4-9 - DHW Sensor/Thermostat
X4-10 - DHW Sensor/Thermostat

80-145A

Figure 34: Electrical Wiring Connections (full page ladder diagram at back of this manual)

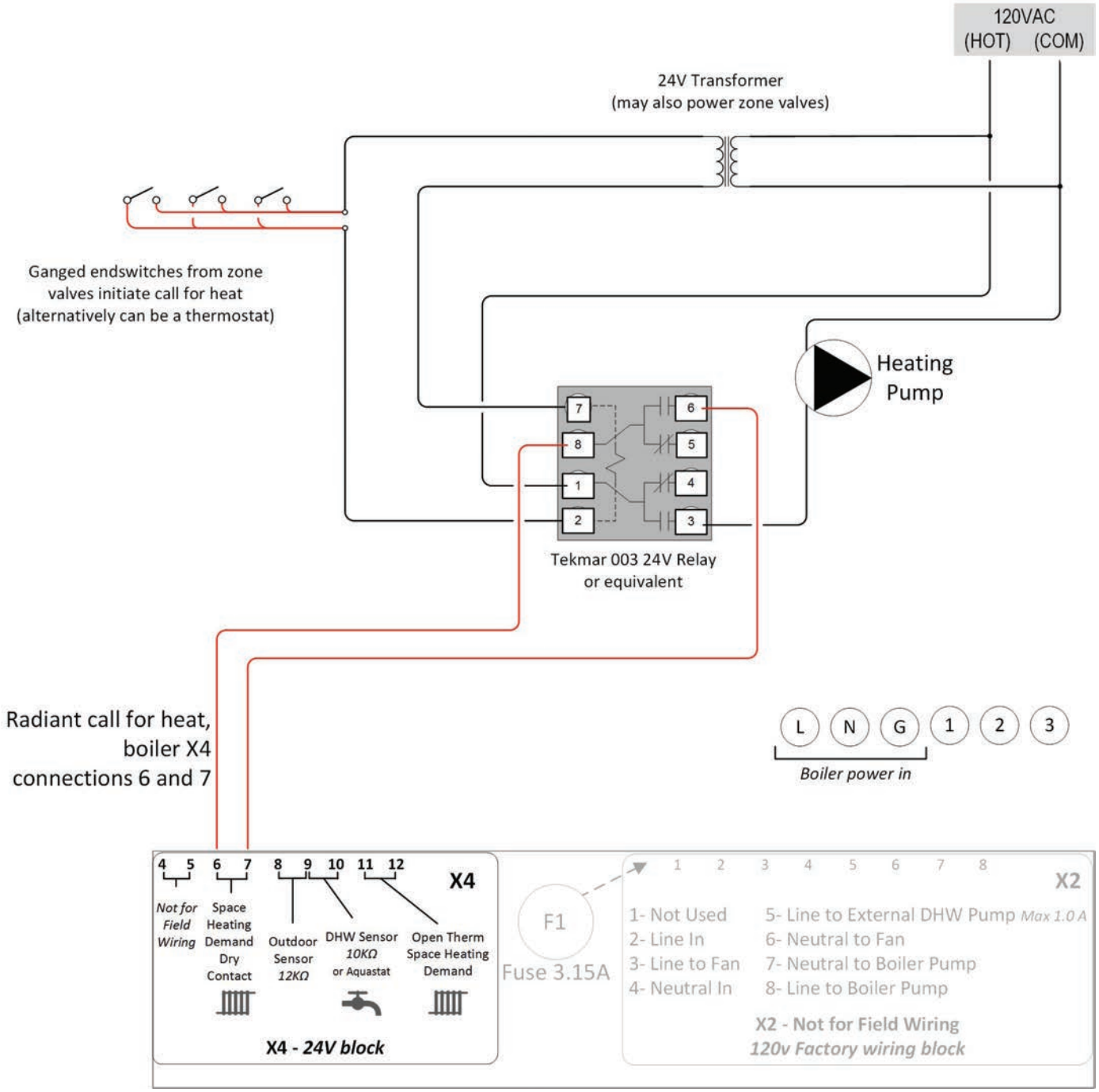

Figure 36: Suggested Field Wiring for Space Heating

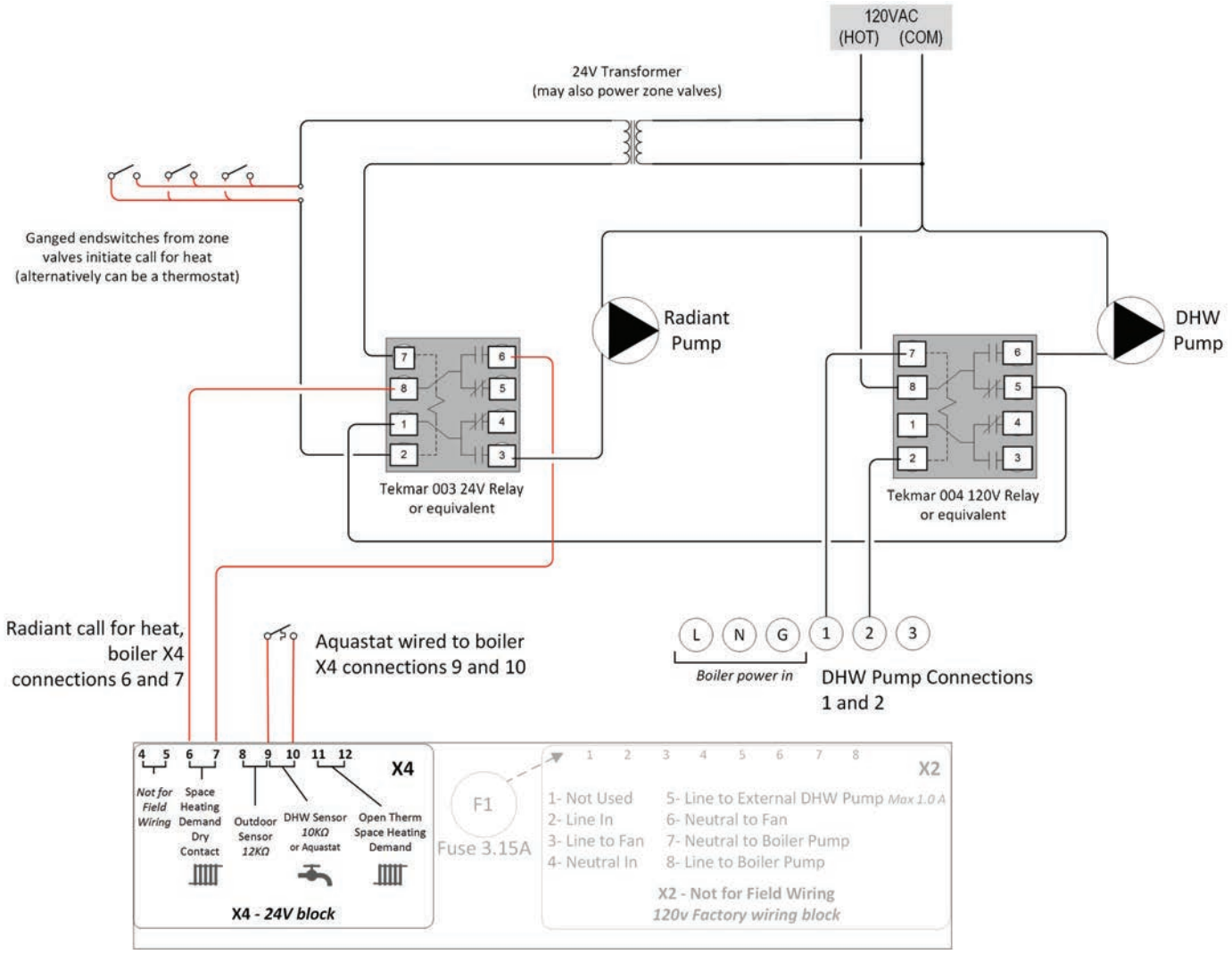

Figure 37: Suggested Field Wiring for Space Heating

PAGE INTENTIONALLY LEFT BLANK

2.0 BOILER SYSTEMS AND OPERATION

2.1 GENERAL

The HC series modulating condensing boilers are designed to heat both the indoor space and an indirect domestic hot water tank. The boiler's unique heat exchanger design incorporates separate copper water ways for space heating and for domestic hot water generation.

The boiler's control is equipped to provide outdoor reset control for the space heating load and also can provide a set-point water temperature for the space heating load. Installing the outdoor sensor is optional but recommended for additional efficiency.

The boiler is equipped with a factory installed pump. The pump is pre-wired and will operate with any call for space heating and when heating an IBC indirect water heater.

The boiler pump will operate for 10 seconds every 24 hours to help prevent pump from seizing. The pump will be energized 24 hours after the last call for heat and every 24 hours after that until the next call for heat.

The boiler is equipped with an electronic boiler controller, which ignites the burner and continuously monitors the flame throughout each call for heat. The control also displays the current operating conditions of the boiler and any error messages should a problem occur.

The boiler's controller also provides frost protection. When the boiler's heat exchanger becomes too cold the burner switches on to keep the heat exchanger warm. Please ensure that the condensate trap is protected from freezing. The boiler must be installed indoors in a heated space.

DANGER

- **Water temperture over 125°F (52°C) can cause severe burns instantly or death from scalds.**
- **Children, disabled, and elderly are at highest risk of being scalded.**
- **See instruction manual before setting temperature at boiler.**
- **Feel water before bathing or showering.**
- **Temperature limiting valves are available, see manual.**

2.2 CONTROL

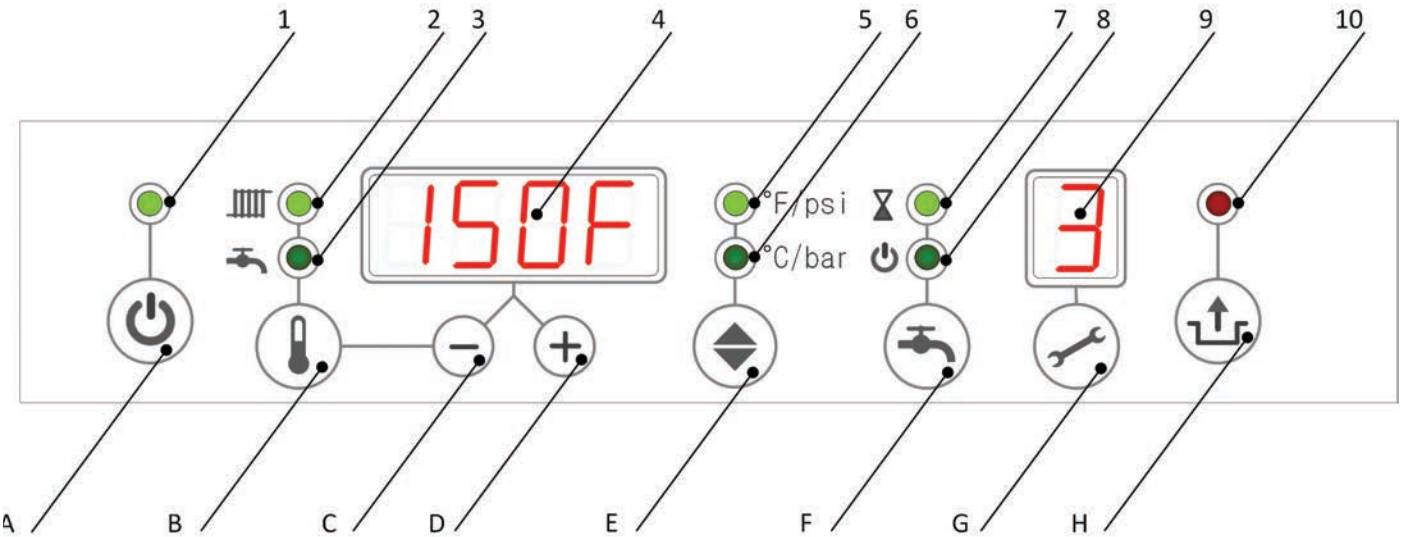

1	Power Indicator	A	Power - ON / OFF
2	Space Heating	B	Space Heating / DHW Toggle
3	Domestic Hot Water	C	Minus
4	Main Display	D	Plus
5	Fahrenheit and PSI	E	Fahrenheit/Celsius
6	Celsius and Bar	F	Domestic Hot Water Comfort / Eco
7	Comfort / ECO / OFF - Indicator	G	Service
8	Comfort / ECO / OFF - Indicator	H	Reset Button
9	Service Display		
10	Flashes to indicate a fault		

Table 7: Controller Indicators and Buttons

NOTE: The control displays codes that include upper and lower case letter and a combination with a period after the letter. Example: C, c., c are all valid parameter codes. When adjusting settings, double check that you are in the correct parameter. *See DC / HC Controller Manual for details.*

2.3 INSTALLER INTERFACE

2.3.1 Appliance ON/OFF

The boiler can be switched on and off with the On/Off button. When the boiler is “ON”, the green LED above the On/Off button will be on. When the boiler is on and there is no call for heat or DHW the displays are blank. When the boiler is “OFF” the main display reads the system pressure, e.g. “14P” for 14 psi.

If the boiler is being powered up after a power outage, the boiler will return to heating as it was when the power was removed from the boiler.

2.3.2 PSI and Fahrenheit / Bar and Celsius

PSI and Fahrenheit are the default setting as shipped from the factory. To change to Bar and Celsius simply press the ◆ to toggle Fahrenheit and Celsius.

⚠ NOTE

Some features of the control are not available with the HC Series boilers. The Direct Domestic Hot Water functions are not available however the Indirect Domestic Hot Water functions are available.

2.3.3 Programing Mode

There are 2 parameters available in the User Set-Up Menu.

USER MENU

Adjusting the Space Heating Water Temperature

To enter the User Menu simply hold down the Space Heating /DHW Toggle button for 2 seconds. The LED beside the will illuminate and the current maximum heating system water temperature will be displayed in the 4 digit display. To alter this value simply press the Plus + or the Minus − buttons.

Adjusting the Domestic Hot Water Temperature

Press the Space Heating /DHW Toggle button a second time and the LED beside the will illuminate and the current tankless domestic hot water temperature target is displayed in the Main Display. To alter this value simply press the Plus + or Minus − buttons.

⚠ NOTE

See separate publication DC / HC Controller Manual (supplied with the boiler) for discussion of displayed codes.

Saving the Changes

To exit from the User Menu and save the changes press the Reset button. Pressing the On/Off button will also exit the User Menu but will NOT save the changes.

2.4 TANKLESS DOMESTIC HOT WATER MODES

2.4.1 Tankless Domestic Hot Water - Standard, Comfort and ECO Comfort Modes

Section Reserved for the DC Series Boilers.

2.5 ADDING DOMESTIC HOT WATER STORAGE

2.5.1 Tankless Domestic Hot Water with a Storage Tank

Section Reserved for the DC Series Boilers.

2.6 SPACE HEATING

2.6.1 Overview

The HC series boiler is designed to be installed in a primary/secondary type piping system. The boiler comes complete with a factory installed boiler pump. The pump is designed to circulate heating system water through the boiler's heat exchanger and primary loop piping only. The building's distribution piping system requires a dedicated pump or pumps to provide circulation of the space heating water through the heating system. The building pump or pumps will require a separate control system or relays to operate the pumps.

Zoning of the space heating system can be accomplished many ways. Several control packages are available from your local wholesaler and offer an easy method of connecting the zoning system to the boiler. Example piping and electrical drawing are available at **www.ibcboiler.com**

The boiler supplies heat to the space using an Outdoor Reset Curve. With an outdoor sensor installed the boiler will automatically adjust its space heating water temperature based on the parameters programmed into the boiler. *See separate publication DC / HC Controller Manual for parameter information.* If the Outdoor Sensor is not installed, the boiler will use the temperature set in the User Set Up menu "Boiler Supply Temperature" to supply hot water to the space heating system.

2.7 SEQUENCE OF OPERATION

NOTE

The boiler is equipped with a Frost Protection feature. This feature will operate the boiler pump and the burner to help protect the boiler from freezing. If the boiler is in a hard lock-out condition the burner will not operate, however the boiler pump will operate. IBC is not responsible for damages to the boiler, and/or related components, nor property damages that may result from freezing conditions.

The boiler will operate in a similar way for both a space heating and a domestic hot water call for heat. When the boiler is powered up the controller enters a self diagnostic mode and displays 2 in the Service Display.

The Sequence of Operation is as follows:

1. The boiler receives a call for heat from closing terminals X4.6 and X4.7 (24 volts). The boiler can also receive a call from Domestic Hot Water heating from the closing terminals, X4.9 and X4.10 (24 volts) (10KΩ sensor or aquastat)
2. The boiler does a safety check and energizes the fan for a pre-purge (Service Display = 3)
3. Once the 5 second pre-purge is compete, the boiler enters a 5 second trial for ignition (Service Display = 4). If the boiler fails to ignite, the boiler will compete a 5 second inter-purge then another 5 second trial for ignition. This is repeated 4 times before a hard lock out occurs. The Reset button must be pressed to reset the controller and allow for another attempt.
4. Once the burner is lit and flame has been proven the boiler operates as it is programmed (Service Display = 5 for Space Heating or 6 for Domestic Hot Water)
5. If the boiler reaches its target temperature and there is still a call for heat or hot water. (Service Display = 1)
6. After the call for heat is satisfied, the boiler pump will operate for an adjustable amount of time (Service Display = 0)
7. If the burner is on to maintain the heat exchanger temperature for DHW Comfort mode or for Freeze Protection mode (Service Display = 7)
8. If the burner is on for Frost Protection (Service Display = 9)

MAIN DISPLAY	SERVICE DISPLAY	DESCRIPTION
[Pressure]	-	The boiler is OFF. Press the On/Off button to turn on the boiler
(blank)	(blank)	No Call for Heat - Standby
XXX	0	Boiler pump running – pump post purge
XXX	1	Boiler water temperature reached target – boiler pump is energized, call for heat still present
XXX	2	Self-test – When power is applied to the boiler the controller enters a self diagnostic mode for 5 seconds
XXX	3	Fan Pre-purge , Inter-purge and Post-purge
XXX	4	Trial for Ignition and Flame Proving
XXX	5	Heating – Space Heating
XXX	6	Heating – DHW
XXX	7	Burner on for Comfort mode or Freeze Protection mode

Table 8: Operating Display and Service Display Codes.

3.0 STARTUP AND COMMISSIONING

3.1 LIGHTING AND SHUTTING DOWN THE BOILER

FOR YOUR SAFETY READ BEFORE OPERATING

WARNING: If you do not follow these instructions exactly, a fire or explosion may result causing property damage, personal injury or loss of life

A. This appliance does not have a pilot. It is equipped with an ignition device which automatically lights the burner. Do not try to light the burner by hand.

B. BEFORE OPERATING smell all around the appliance area for gas. Be sure to smell next to the floor because some gas is heavier than air and will settle on the floor.

WHAT TO DO IF YOU SMELL GAS

- **Do not try to light any appliance.**
- **Do not touch any electric switch; do not use any phone in your building.**
- **Immediately call your gas supplier from a neighbor's phone. Follow the gas supplier's instructions.**
- **If you cannot reach your gas supplier, call the fire department.**

C. Use only your hand to turn the gas control valve. Never force using tools. If the valve will not turn by hand, don't try to repair it, call a qualified service technician. Force or attempted repair may result in a fire or explosion.

D. Do not use this appliance if any part has been under water. Immediately call a qualified service technician to inspect the appliance and to replace any part of the control system and any gas control which has been under water.

OPERATING INSTRUCTIONS

1. **STOP! Read the safety information above on this label before doing anything.**
2. **Set the thermostat to lowest setting.**
3. **Turn off all electric power to the appliance by selecting main power switch to OFF.**
4. **This appliance is equipped with an ignition device which automatically lights the burner. Do not try to light the burner by hand.**
5. **Locate manual gas shut-off valve (see pictures below) and turn clockwise to "CLOSE".**
6. **Wait five (5) minutes to clear out any gas. Then smell for gas, including near the floor. If you smell gas, STOP! Follow step "B" in the safety information above on this label. If you don't smell gas, go to the next step.**
7. **Turn gas control valve to OPEN.**
8. **Turn on electric power to appliance by selecting main power switch to ON.**
9. **Set thermostat to desired setting.**
10. **If the appliance will not operate, follow the instructions "TO TURN OFF GAS APPLIANCE" and call your service technician or gas supplier.**

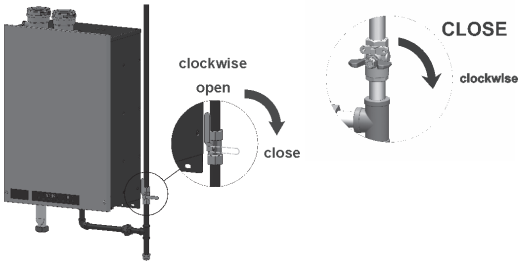

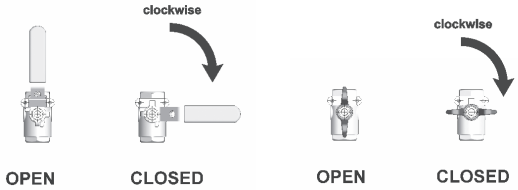

TO TURN OFF GAS APPLIANCE

1. **Set the thermostat to lowest setting.**
2. **Turn off all electric power to the appliance by selecting main power switch to OFF.**
3. **Turn gas control valve to CLOSE.**

3.2 PRIOR TO START-UP

⚠ DANGER

Fill trap with water before boiler is first fired to prevent exhaust fumes from entering room. Never operate the boiler unless the trap is filled with water.

Failure to comply will result in severe personal injury or death.

⚠ DANGER

Making adjustments to the IBC gas valve without a properly calibrated gas combustion analyzer and by persons who are not trained and experienced in its use is forbidden. Failure to use an analyzer can result in an immediate hazard.

3.2.1 Pre-Ignition Checks

1. Fill condensation trap. Ensure venting system is complete and seal tested. Confirm any common venting system at the installation site is isolated and independent of the HC boiler, that any holes left from removal of a previous boiler have been sealed, and that any resizing of the old flue has been done.
2. Check water piping system is fully flushed and charged, and that all air has been discharged through loosened bleed caps. Use a minimum water pressure of 12 psig and confirm pressure relief valve is installed and safely drained.
3. Check to see that adequate gas pressure is present at the inlet gas supply test port. With the boiler gas valve shut off, open the test port (using a small (1/8" or 3 mm) flat screwdriver, open the test port by turning its center-screw 1 full turn counterclockwise. Connect a manometer and open the gas control valve. Requirements are minimum 5" w.c and maximum 14" w.c. Check to ensure no gas leaks.
4. Perform a final check of electrical wiring and provide power to the boiler to initialize operation.

3.2.2 Test Ignition Safety Shutoff

With the boiler in operation, test the ignition system safety shutoff device by shutting the manual gas valve immediately outside the boiler case. Ensure boiler has shut off and the appropriate Error information is displayed on the Main Display screen. To restart boiler, reset power.

3.3 COMMISSIONING

The HC Series modulating boilers are factory calibrated to operate with natural gas at sea level. ***The Low Fire (Zero Offset) screw is not to be adjusted in the field.*** The High fire (Gas : Air Ratio Adjustment) screw may have to be adjusted to attain optimum combustion results if required, however, **no mixture adjustment shall be performed unless done by a qualified technician using properly functioning and calibrated combustion analyzing equipment.**

This boiler model can burn either Natural gas or Propane if equipped with the correct specified orifice. Examine the rating plate of the boiler to ensure it is configured for the fuel you are using. If the boiler is to be converted from Natural Gas to Propane or from Propane to Natural Gas a Fuel Conversion Kit must be installed. The correct Fuel Conversion Kit part number can be found in Table 9.

MODEL NUMBER	NATURAL GAS TO PROPANE	PROPANE TO NATURAL GAS
HC 13-50	P-704	P-705
HC 23-84	P-700	P-701
HC 29-106	P-700	P-701
HC 20-125	P-737	P-738
HC 33-160	P-702	P-703

Table 9: Fuel Conversion Kits

⚠ WARNING

Check the rating plate of the boiler to ensure it is configured for the fuel you are using. If the fuel is incorrect for the appliance, a conversion kit must be ordered from IBC and the gas valve adjusted accordingly.

Failure to perform the required fuel conversion can result in an immediate hazard.

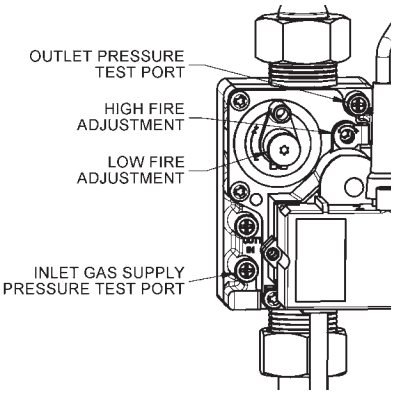

Gas Valve Adjust

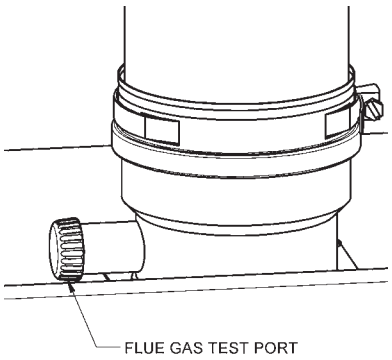

Flue gas test port plug

The gas valve will automatically de-rate the maximum input in accordance with the density altitude, by approximately 2% per 1,000' above sea level. The gas valve's zero governor will ensure that the gas:air mixture is not be affected at altitude.

To verify the proper operation of the gas valve in the field, the following procedure can be carried out by a qualified technician *(diagrams on this page).*

1. Turn off the boiler's gas shut off valve. With a small (1/8" or 3 mm) flat screwdriver, open the inlet gas supply pressure test port by turning its center-screw 1 full turn counterclockwise. Attach a manometer to the pressure test port and turn on gas to appliance. Static manometer reading should be ideally 7" w.c., for Natural Gas and 11" w.c. for Propane. Minimum and maximum static pressure should be between 7" and 14" w.c. Monitor pressure throughout the commissioning procedure. Pressure may droop up to 1" to 2" w.c. at high fire.
2. Allow the boiler to ignite / run against a large load, to maintain high fire. Enter the High Fire Manual Mode by pressing both the Service and Plus + buttons together twice. "H" will be showing in the service display. NOTE: Do not make any adjustments if an "h" is showing in the service display. Allow the boiler to operate at High Fire for 3 minutes to stabilize. (The boiler will operate in manual mode for 10 minutes then switch back to the normal operating mode. To extend manual mode operation, press the Service and Plus + together twice while the boiler is operating in manual mode to reset the timer for 10 more minutes.) Pressing and holding + for more than 2 seconds while in the Service Mode will display the Flame Current in DC microamps. Expect approximately 9.8µA at High Fire (8.7µA at Low).
3. With a combustion analyzer probe in the flue gas test port, turn the High Fire (Gas : Air Ratio Adjustment) screw *(see diagrams on this page)* to achieve results. This screw offers very fine adjustment, and may require several turns. Clockwise richens, i.e. raises the CO_2 value.
   NOTE: Clock the gas meter to confirm full maximum rating plate input. Check the measured results with Table 10 - High Fire.
4. Switch the boiler to low fire by pressing both the Service button and Minus − buttons at the same time. The boiler will drop to low fire. "L" will be showing in the service display. Compare the readings with Table 10 - Low Fire.
5. Switch off the boiler by pressing the On/Off button. Turn off the gas at the boiler gas shut off valve. Remove the flue gas analyzer from the test port and reinstall the test port cap. Remove the gas pressure manometer from the gas valve and close the test port. Turn on the gas at the boiler's gas shut off valve. Ensure there are no gas leaks and reinstall the front cover. Turn on the boiler by pressing the On/Off button.

CO_2 VALUE (%) AT HIGH FIRE WITH THE FRONT COVER OPEN		
	NATURAL GAS	PROPANE
Max. CO_2 value	10.1%	11.5%
Min. CO_2 value	9.1%	9.8%
CO_2 VALUE (%) AT LOW FIRE WITH THE FRONT COVER OPEN		
Max. CO_2 value	= value at High	= value at High – 0.3%
Min. CO_2 value	9.1%	9.5%

Table 10: CO_2 Values and High and Low Fire

3.4 FUEL CONVERSION

⚠ DANGER

Operating any IBC boiler using a fuel other than the fuel listed on its rating plate is prohibited. If the information in this section related to conversion to alternate fuels is not followed exactly, a dangerous situation can result, leading to fire or explosion, which may cause property damage, personal injury, or loss of life.

PROPANE ORIFICE CHART	
MODEL NUMBER	ORIFICE SIZE
HC 13-50	330
HC 23-84	505
HC 29-106	505
HC 20-125	460
HC 33-160	580

NATURAL GAS ORIFICE CHART	
MODEL NUMBER	ORIFICE SIZE
HC 13-50	480
HC 23-84	650
HC 29-106	650
HC 20-125	550
HC 33-160	725

The HC Series modulating boiler is factory fire-tested to operate with natural gas. The rating plate will be marked to indicate which fuel the particular boiler has been set up with. Firing a boiler with a fuel other than what is listed on the rating plate is prohibited unless the following conversion procedure is completed by a qualified technician.

Refer to the preceeding section 3.3 - COMMISSIONING. The Low Fire (Zero Offset) valve adjustment cap on the gas valve has been factory set. ***This cap must not be tampered with. The Zero-offset screw is not to be adjusted in the field.***

Fuel conversion requires hardware adjustments (Orifice Replacement) as well as measurement and possible tuning of the gas :air mixture. Detailed instructions including parts and labeling are found in Fuel Conversion kits: *Refer to Table 9 for the correct kit number.*

CO_2 VALUE (%) AT HIGH FIRE WITH THE FRONT COVER OPEN		
	NATURAL GAS	PROPANE
Max. CO_2 value	10.1%	11.5%
Min. CO_2 value	9.1%	9.8%
CO_2 VALUE (%) AT LOW FIRE WITH THE FRONT COVER OPEN		
Max. CO_2 value	= value at High	= value at High – 0.3%
Min. CO_2 value	9.1%	9.5%

Table 11: CO_2 Values and High and Low Fire

The following procedure must be carried out by a qualified technician.

1. Select the correct Fuel Conversion Kit for your boiler from Table 9.
2. Ensure the fuel conversion instructions supplied with the fuel conversion kit are read, understood and followed carefully.
3. Ensure that the gas supply is turned off at the gas control valve.
4. Disconnect the gas valve harness plug from the gas valve.
5. Disconnect the nut at the gas valve outlet (top of the gas valve) and remove the orifice and O-ring.
6. Insert the correct orifice into the O-ring and re-install into the nut at the gas valve outlet (top of the gas valve) and tighten the nut.
7. Restore gas supply by opening the gas control valve, and using an approved leak detection solution, soap test all joints.
8. Place the conversion labels associated with the new fuel onto the boiler at the positions indicated on the applicable conversion kit instruction sheet.
9. Carefully follow the *"Prior to Start-Up" – Section 3.2 and "Commissioning" – Section 3.3 procedures on the preceeding pages 3-2 and 3-3.*

3.5.1 Gaining access to combustion chamber, burner removal instructions

DIS-ASSEMBLY

1. Turn off the main power switch to the boiler.
2. Turn off the gas supply valve to the boiler.

WARNING

Fan Outlet Orifice (25mm) must be installed in the DC 23-84 model. If the fan is being replaced the orifice must be reinstalled in the new fan.

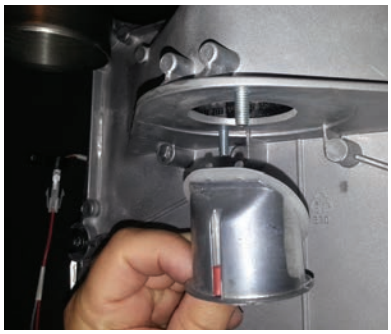

Back Flow Insert

WARNING

When converting a Natural Gas boiler to Propane, the Back Flow Flapper must be replaced with the Propane Back Flow Flapper (see instructions in fuel conversion kit). Failure to replace the Flapper may result in damage to the boiler, serious injury or death.

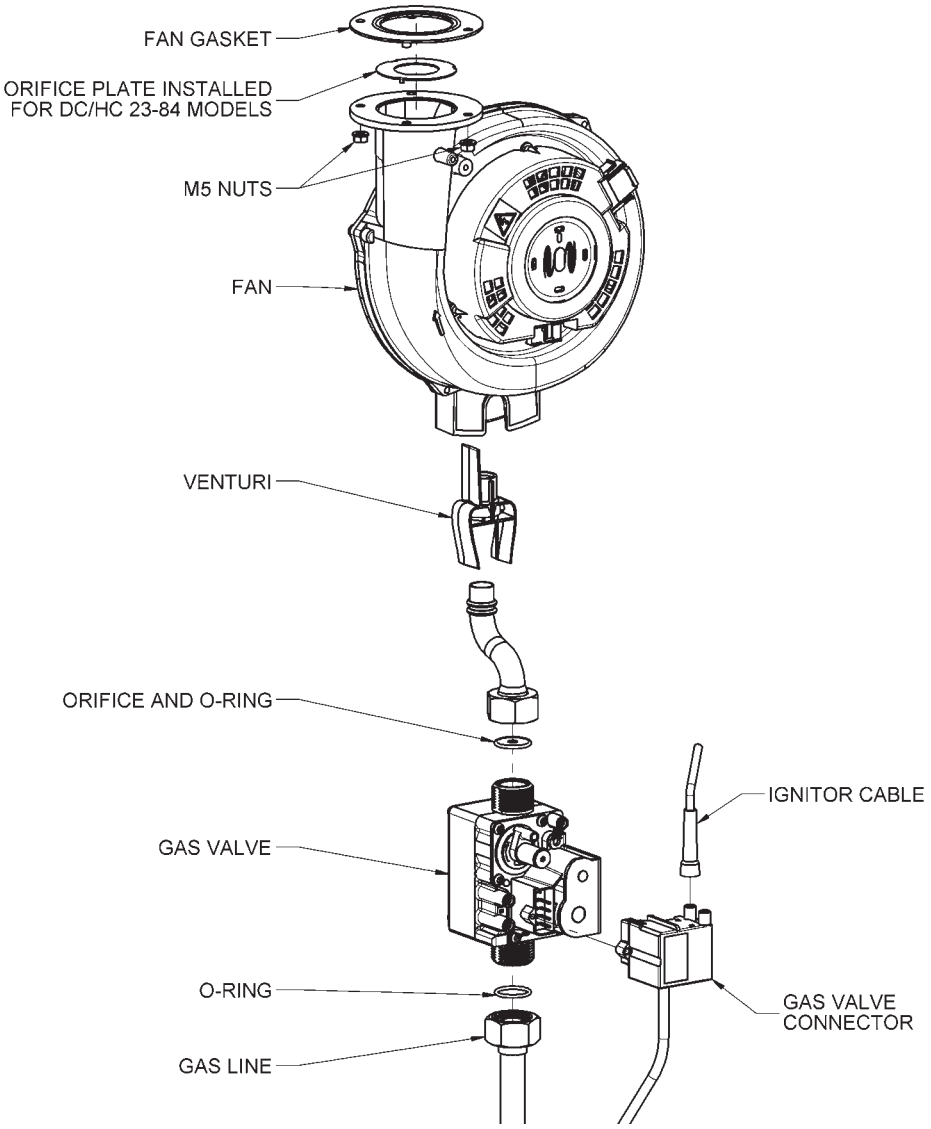

Figure 35: Blower and Gas Valve Assembly

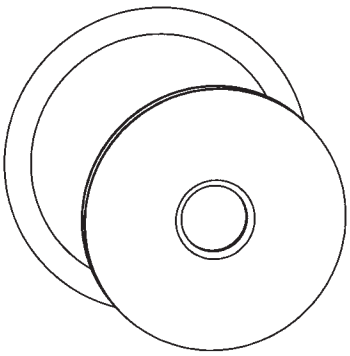

Figure 36: Orifice and O-ring

NOTE

The safety warning regarding burner refractory on page 4-2 of this manual must be observed.

3. There is no need to drain the boiler's water unless the boiler will be subject to freezing conditions while the boiler is off.
4. Remove the front cover and allow the boiler to cool.
5. Disconnect the flue pipe from the condensate tray by rotating the nut counter-clockwise about 1/4 turn. Slide the flue pipe up and dis-engage the bottom of the flue pipe from the condensate tray and slide down to remove.
6. Unplug the electrical connector at the gas valve.
7. Loosen both the lower gas valve connection nut. NOTE: There is an O-ring in the lower gas connection and an O-ring and orifice in the upper gas valve connection. Place these in a safe location to be used for re-assembly. Cover the gas piping connections to prevent debris from entering the gas piping.
8. CAUTION: When removing the heat exchanger cover in step 9, be careful not to damage the burner and refractory material located on the opposite side of the heat exchanger cover. Use caution when handling refractory materials. *See Caution on page 4-2.*
9. Remove all 9 or 11 – 6mm hex bolts and lock washers from the heat exchanger cover and carefully remove the front cover complete with the fan and the gas valve attached. Carefully inspect the gasket sealing the heat exchanger to the heat exchanger cover for damage, hardness, cracks, and or discoloration. If damaged in any way the gasket must be replaced.
10. Place the heat exchanger cover in a safe location.

RE-ASSEMBLY

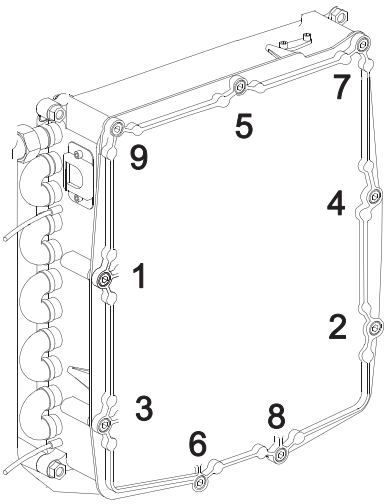

1. Carefully inspect the gasket sealing the heat exchanger to the heat exchanger cover for damage, hardness, cracks, and/or discoloration. If damaged in any way the gasket must be replaced. Inspect and clean if necessary the mating gasket surface.
2. Place the heat exchanger cover onto the heat exchanger and loosely install the 9 or 11 – 6mm hex bolts and lock washers removed in step 9. Tighten the 6mm hex bolts in a cross pattern as shown in *diagram on this page.*
3. Connect the gas line to the gas valve ensuring the O-ring is in place. Tighten the gas valve nut. Ensure the upper gas valve connection is tight. Re-connect the gas valve electrical connection.
4. Re-connect the electrical connections to the fan.
5. Re-install the flue pipe to the vent connector at the top of the boiler and to the condensate tray. Tighten the nut clockwise about 1/4 turn. Ensure the nut is properly engaged. Hand tighten only, Do Not Use any tools to tighten the flue pipe nut.
6. Inspect the condensate trap for debris. Remove and clean if necessary. Fill the condensate trap with water.
7. Turn on the gas supply valve to the boiler and inspect for gas leaks. Use an approved leak detection solution; soap test all joints.
8. Ensure the boiler is full of water and purged of air if the boiler was drained during dis-assembly - step 3.
9. Turn on the power to the boiler and create a call for heat or for domestic hot water.
10. Inspect the gasket around the heat exchanger cover and flue pipe connections for leaks.
11. Check flue gases for proper combustion. *See Section 3.3 Commissioning* for proper adjustments.
12. Re-install the boiler cover and set the boiler into normal operation.

4.0 MAINTENANCE

4.1 BOILER MAINTENANCE

⚠ CAUTION

The owner is responsible for general care of the boiler. Improper maintenance of the boiler may result in a hazardous condition.

⚠ CAUTION

Label all wires prior to disconnection when servicing controls. Wiring errors can cause improper and dangerous operation.

⚠ CAUTION

Periodic inspection of Low Water Cut-Off Device including flushing of float types is required, if installed as an accessory to the boiler.

⚠ WARNING

Fill trap with water before boiler is first fired to prevent exhaust fumes from entering room. Never operate the boiler unless the trap is filled with water.

Failure to comply will result in severe personal injury or death.

⚠ WARNING

Whenever the burner is removed for inspection or boiler servicing, the sealing gaskets must be examined and replaced if damaged. Upon re-assembly, an approved leak test solution must be applied around the burner flange sealing area to ensure there is no leakage of combustible gas/air premix.

4.1.1 General Care

- Keep combustible materials and flammable liquids and vapours away from the boiler.
- Keep vent terminals clear of obstructions (snow, dirt, etc.).

4.1.2 Inspection

Inspection of the boiler is to be performed annually by a qualified service technician.

4.1.3 Venting

- Check vent terminals for and remove any obstructions (e.g. leaves, dust, other debris).
- Check, and clean or replace intake air filters or screens as required.
- Check for holes or leaks in venting. Replace venting as needed.
- Examine for any signs of moisture caused by sweating intake air pipes; insulate as required.
- Ensure proper resealing or reinstallation of venting on each servicing.

4.1.4 Condensate Traps

- Condensate trap must be examined every two months to see if cleaning is necessary *(refer to trap cleaning instructions, section 1.5.3 of this manual).* Ensure that trap has been re-filled completely before firing boiler.
- If condensate neutralization is used, check pH level of condensate discharge.

4.1.5 Burner

- Annually, remove burner to inspect for extent of fouling *(refer to burner removal and reassembly instructions, section 3.5.1 of this manual).* Blow clear using compressed air. Evaluate the magnitude of clearing required, and establish a reasonable burner inspection schedule. Some boiler / locations may call for annual service, others showing clean burners will only need attention every 2 – 5 years. Consider adding air filtration if burner requires cleaning every year. In alternate years, visually inspect burner through sight glass. Ensure flame is stable and without excessive fluttering. Normal flame pattern is evenly distributed over the burner surface.
- If burner is operating improperly, remove and clean or replace. Use a CO_2 analyzer to determine proper combustion. *See Table 11, page 3-3 for correct values.*

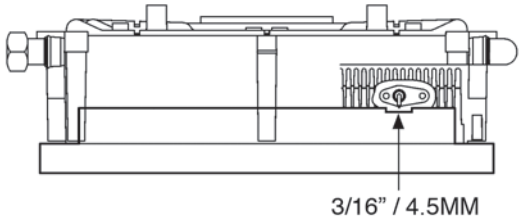

Figure 37: Ignitor Gap - 3/16" / 4.5mm

⚠ CAUTION

The heat exchanger has a small amount of combustion chamber insulation (refractory), which contains ceramic fibers.

When exposed to extremely high temperatures, the ceramic fibers, which contain crystalline silica, can be converted into cristobalite - which is classified as a possible human carcinogen.

Care should be taken to avoid disturbing or damaging the refractory. If damage occurs, contact the factory for directions.

Avoid breathing and contact with skin and eyes and follow these precautions:

1. **For conditions of frequent use or heavy exposure, respirator protection is required. Refer to the "NIOSH Guide to the Selection and Use of Particulate Respirators Certified under 42 CFR 84" for selection and use of respirators certified by NIOSH.**

   For the most current information, NIOSH can be contacted at 1-800-356-4676 or on the web at

   www.cdc.gov/niosh.
2. **Wear long sleeved, loose fitting clothing, gloves and eyes protection.**
3. **Assure adequate ventilation.**
4. **Wash with soap and water after contact.**
5. **Wash potentially contaminated clothes separately from other laundry and rinse washing machine thoroughly.**
6. **Discard used insulation in an air tight plastic bag.**

NIOSH stated first aid:

- **Eye contact - Irrigate and wash immediately.**
- **Breathing - Provide fresh air.**

4.1.6 Heat Exchanger

During annual inspection (with the heat exchanger cover removed), examine the heat exchanger for signs of contamination and clean if necessary. In areas of poor gas quality or contaminated combustion air, there may be a buildup of black plaque (typically sulfur). Other fouling agents: airborne dust, debris and volatiles. Clean the heat exchanger surface with a stiff plastic bristle brush only.

Refer to heat exchanger cover removal instructions in Section 3.5.1 for access to combustion chamber and heat exchanger. ***Note that the safety warning regarding burner refractory on this page must be observed.***

4.1.7 Pump

Check that the pump is on in normal space heating operation and that the water Delta T is reasonable for the heating application.

4.1.8 Gas Piping

Check for damage or leaks and repair as needed.

4.1.9 Control Module

- Check that boiler operation is consistent with the steps in *Section 2.7* **Sequence of Operation**.
- Check that water temperature targets and setpoint are satisfactory and have not been adversely amended.
- Check that the domestic hot water generation is performing as expected. Fouling of the interior of the domestic heating coil can cause poor performance.

4.1.10 Water Heating System

- Check water pressure and temperature. There should be no noticeable change if boiler and system components are functioning normally. Check for any noise in the system.
- Check heating system water piping for damage or leaks and repair as needed.
- Check for 12-15 psig in normal operation, and look to ensure pressure does not run up toward 30 psig at high temperature. If pressure rises sharply, consider replacement of expansion tank. Check also for noise at high fire, which may signal water quality problems.
- Water chemistry shall be of a quality generally accepted as suitable for hydronic applications. *See Section 1.6 for details.*
- Ensure any direct "city fill" water connections are left in the **closed** position to minimize exposure to leaks and flooding.

4.1.11 Freeze Protection

The boilers control will operate the boiler to protect the boiler from freezing. If the boiler and system components are subject to possible freezing condition then a freeze protection solution is recommended. Check freeze protection. Use only antifreeze made specifically for hydronic systems. Inhibited propylene glycol is recommended. Antifreeze concentration must be between 25% and 50% of the total volume of water in the system.

WARNING

Do not use automotive-type ethylene or other types of automotive glycol antifreeze, or undiluted antifreeze of any kind. This may result in severe boiler damage. It is the responsibility of the Installer to ensure that glycol solutions are formulated to inhibit corrosion in hydronic heating systems of mixed materials. Improper mixtures and chemical additives may cause damage to ferrous and non-ferrous components as well as non-metallic, wetted components, normally found in hydronic systems. Ethylene glycol is toxic, and may be prohibited for use by codes applicable to your installation location. For environmental and toxicity reasons, IBC recommends only using non-toxic propylene glycol.

NOTE

Installers should inquire of local water purveyors as to the suitability of their supply for use in hydronic heating systems.

If water quality is questionable, a local water treatment expert must be consulted for testing, assessment and, if required, treatment.

Alternatively, water or hydronic fluid of known quality can be brought to the site.

CAUTION

Before testing the relief valve, make certain the discharge pipe is properly connected to the valve outlet and arranged to contain and safely dispose of equipment discharge.

4.1.12 Boiler Treatment

- Check consistency of any boiler treatment used, for appropriate mixture. Chemical inhibitors are consumed over time, lowering their density.
- Verify proper operation after servicing.

4.1.13 Relief Valve - Maintenance and Testing

The relief valve manufacturer requires that under normal operating conditions a “try lever test” must be performed every two months. Under severe service conditions, or if corrosion and/or deposits are noticed within the valve body, testing must be performed more often. A “try lever test” must also be performed at the end of any non-service period.

Test at or near maximum operating pressure by holding the test lever fully open for at least 5 seconds to flush the valve seat free of sediment and debris. Then release the lever and permit the valve to snap shut.

If the lever does not activate, or there is not evidence of discharge, discontinue use of equipment immediately and contact a licensed contractor or qualified service personnel.

If the relief valve does not completely seal, and fluid continues to leak from the discharge pipe - perform the test again to try and flush any debris that may be lodged in the valve. If repeated tries fail to stop the leakage, contact a licensed contractor or qualified service personnel to replace the valve.

While performing a “try lever test”, a quantity of heat transfer fluid will be discharged from the piping system and the system pressure will drop. This fluid must be replaced. It is highly recommended that a system pressurization unit, such as an *Axiom Industries model MF200* be employed to refill and pressurize your system. Capture the discharged fluid in a container and recycle it by returning it to the system feeder unit. This is particularly important when your system contains treatment chemicals or glycol solutions. If the system employs plain water, the boiler auto fill valve must be turned on in order to recharge the lost fluid.

4.1.14 Domestic Hot Water System

Section Reserved for the DC Series Boilers.

⚠ DANGER

When servicing or replacing the fan the following parts must be moved from the old fan to the new fan.

- **Venturi**
- **Back Flow Valve**
- **Fan Outlet Orifice (HC 23-84 model only)**

Failure to relocate these parts to the new fan may cause an immediately hazardous situation which must be avoided in order to prevent serious injury or death.

4.1.15 Fan and gas valve removal instructions

1. Turn off the power and the gas supply to the boiler
2. Remove the front cover and allow the boiler to cool down
3. Disconnect the 2 electrical plugs attached to the fan
4. Loosen the union nut at the top of the gas valve. Carefully remove the Orifice and O-ring and keep in a safe place for re-installation later. Ensure you protect the gas valve outlet from dust and debris.
5. Remove the 2 hex nuts connecting the fan to the burner housing and carefully remove the fan. You will find a gasket attached to the fan outlet as well as a back flow valve above it, inserted in the heat exchanger. Keep these items in a safe place for re-installation.
6. If the removed fan is to be re-installed, ensure the fan and venturi are clean and dust free.

4.1.16 Fan and gas valve re-assembly instructions

1. If the fan is being replaced, move the venturi to the new fan. Note that the fit is tight.
2. Place the fan gasket on the outlet of the fan housing. The gasket has 2 locator pins to ensure the gasket does not move during installation.
3. Attach the fan to the burner housing and install the 2 hex nuts. Tighten the 2 hex nuts with a wrench.
4. Insert the Orifice and O-ring between the gas valve outlet and the gas line to the fan. Tighten the gas valve union nut with a wrench. Ensure the gas valve inlet (lower) nut is tight.
5. Connect the 2 electrical plugs to the fan
6. Restore gas supply to the boiler and test the gas valve inlet for gas leaks.
7. Restore power to the boiler and create a call for heat or hot water.
8. Check for leaks at the gas valve outlet and the connection between the fan and the burner housing.
9. Install the cover to the boiler.
10. Reset the boiler to normal operation.

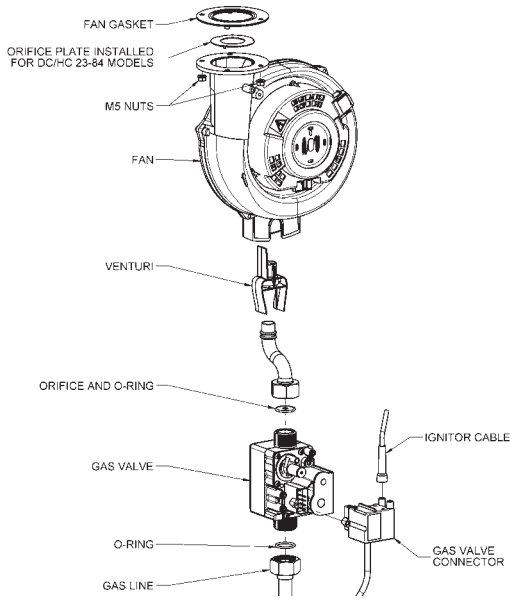

Figure 38

5.0 TROUBLESHOOTING

NOTE

This boiler is equipped with a blocked vent shutoff system, which closes the gas supply upon detection of an irregular venting condition.

The troubleshooting section is divided into 4 sections:

5.1 Preliminary Checks

5.2 Electronic Components

5.3 Warnings and Faults

5.4 Other Faults

Often, a problem can be identified and solved through simple checks of the basics: confirming the electrical power supply, gas flow and resetting the thermostat control. To extend the cover of such preliminary checks, the boiler's control module offers a clear visual display of the status of the various control circuit components.

Should a problem remain unsolved after applying the preliminary checks, proceed to the detailed system review, using the Troubleshooting Guide. The Guide covers potential error conditions as grouped into the following categories:

5.3.1 Warning Codes

5.3.2 Fault Codes

5.4.1 Burner does not Ignite

5.4.2 Burner Ignites Noisily

5.4.3 Burner Resonating

5.4.4 The Power is Reduced

5.4.5 No Space Heating

5.4.6 Indoor Temperature Does Not Reach Desired Temperature

5.4.7 No Hot Water (DHW)

5.4.8 Hot Water Does Not Reach Temperature

Below each section is a list of Symptoms, Diagnoses, and Remedies.

Also provided with this manual are a number of diagrams *(see Section 6.0)* for use with troubleshooting including:

- Electrical Wiring Diagrams
- Boiler Component Layout Diagrams

5.1 PRELIMINARY CHECKS

The first step in troubleshooting this system should be a review of the Controller's display screen. There are a number of diagnostic features incorporated in the software that evaluate system integrity, display error conditions and provide initial suggested remedial actions.

In addition to checking the display, the following list is a guideline for troubleshooting:

1. Confirm power to the boiler: check that control module display is on (e.g. display is lit).
2. Check that boiler is not in a safety lockout.
3. Ensure wiring is clean and secure.
4. Check that gas is reaching the unit.
5. Confirm water system is properly charged to 12 psig and pump is serviceable.

5.2 ELECTRONIC COMPONENTS

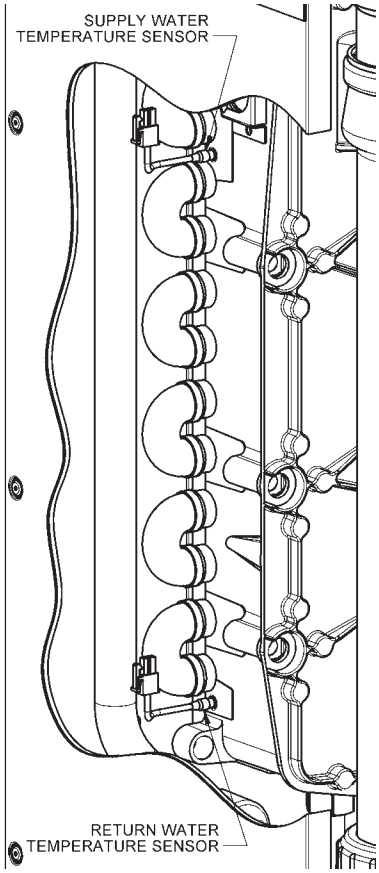

Water temperature sensors

This section details the method for troubleshooting the non-standard electronic components on the boiler including the electronic water pressure sensor – type LWCO and the temperature sensors.

5.2.1 Temperature Sensors

The resistance of the temperature sensors varies inversely with temperature. To test, measure the temperature of the sensed environment and compare with the value derived from the measurement of the resistance (obtained by connecting a good quality test meter capable of measuring up to 5,000 kΩ (5,000,000Ω) at the controller end of the sensor lead).

To obtain a resistance reading, remove power to the boiler. For the supply water and return water temperature sensors, remove the wire leads by disconnecting their respective Molex connectors. Place multi-meter probes into sensor's male Molex connector socket. Do not apply voltage to the sensor (damage may result).

12KΩ Temperature Sensors supplied with boiler. See Table 12 for resistance values.

SENSOR	TYPE	PURPOSE	LOCATION
S1	NTC 12KΩ	Supply Water Temperature	Upper Left of Heat Exchanger
S2	NTC 12KΩ	Return Water Temperature	Lower Left of Heat Exchanger
S3	NTC 12KΩ	Domestic Hot Water	DHW Supply Pipe
S4	NTC 10KΩ	Hot Water Tank	External Water Heater
S5	NTC 12KΩ	Outdoor Sensor	Outdoors (North side)
	NTC 12KΩ	Flue Gas Temperature	Bottom of Heat Exchanger at Flue outlet
		Water Pressure	Heating Supply Pipe

Temperature and Pressure Sensors

TEMPERATURE	RESISTANCE	TEMPERATURE	RESISTANCE	TEMPERATURE	RESISTANCE
F / C	Ω - ohm	F / C	Ω - ohm	F / C	Ω - ohm
5F / -15C	76,020	77F / 25C	12,000	149F / 65C	2,752
14F / -10C	58,880	86F / 30C	9,805	158F / 70C	2,337
23F / -5C	45,950	95F / 35C	8,055	167F / 75C	1,994
32F / 0C	36,130	104F / 40C	6,653	176F / 80C	1,707
41F / 5C	28,600	113F / 45C	5,522	185F / 85C	1,467
50F / 10C	22,800	122F / 50C	4,609	194F / 90C	1,266
59F / 15C	18,300	131F / 55C	3,863	203F / 95C	1,096
68F / 20C	14,770	140F / 60C	3,253	212F / 100C	952

Table 12: Temperature Sensor Resistance Values – 12KΩ sensors.

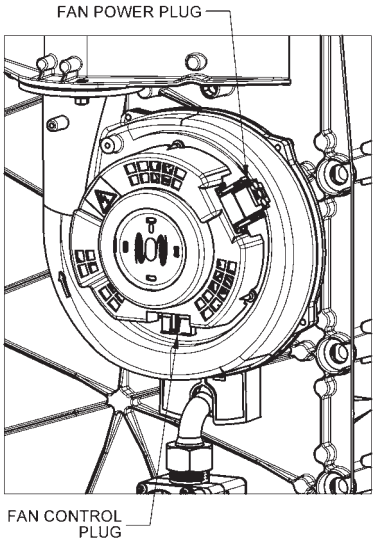

Fan Power and Control Plugs

5.2.2 Fan/Blower

Operating power is provided by means of a separate 120 VAC connector at the upper right side of the fan (white/black/green). Control of the fan is provided via a four lead connector at the bottom of the fan.

5.2.3 Thermostat Connections

The boiler controller is designed to heat a single space heating load. The load can consist of a single zone or several zones. In either case the 'Call for Heat' must be from a device providing a DRY CONTACT and connected to X4.6 and X4.7. The use of power robbing thermostats directly will cause the boiler to operate erratically. If a power robbing thermostat is to be used it will have to be isolated through a relay.

5.2.4 Water Pressure Sensor-Type Low Water Cut Off (LWCO)

The HC boiler is equipped with a pressure sensor which serves as a low-water cut-off. The water pressure is displayed in the main display when the pressure is low. For example a system water pressure of 4.6psi would be displayed as 4.6P. If the pressure is too low the controller will flash an error message in the main display by toggling between the actual pressure and LO. Simply increase the system pressure to correct this error. The water pressure in the heating system must be higher than 8psi for the boiler to reach maximum firing rate. When the water pressure less than 8psi, the boiler will restrict its firing rate. If the pressure is less than 4psi then the boiler will not fire at all.

TO TEST THE OPERATION OF THE PRESSURE SENSOR – TYPE LWCO

1. Turn off the boiler at the controller by pressing the ⏻ button. The current system pressure will be displayed.
2. Isolate the space heating circuit and reduce the water pressure. The displayed water pressure should drop as the system water is being removed. If the pressure is remaining steady then the pressure sensor may be blocked or faulty. If so, drain boiler and replace sensor, or dislodge any blocking debris from sensor inlet channel and reinsert.
3. If the pressure sensor is OK then simply refill the boiler and open the closed valves. Ensure the system pressure is adequate for the heating system.

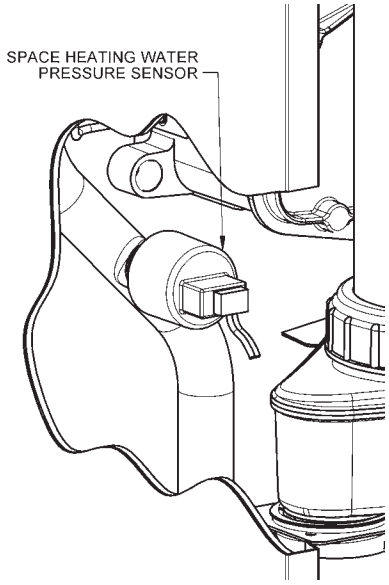

Water Pressure Sensor Type LWCO

PRESSURE SENSOR LWCO REPLACEMENT

1. Turn off the power to the boiler.
2. Isolate and drain the boiler.
3. Remove the Vent Stack.
4. Disconnect the electrical connection to the sensor.
5. Carefully remove the clip at the base of the sensor.
6. Twist the sensor as you are pulling to remove from the socket. There may be some water leakage at this point. Ensure the water does not spill into the controller.
7. Push the new sensor into the socket while twisting slightly. Careful not to damage the O-ring.
8. Reinstall the clip at the base of the sensor to ensure the sensor does not come out when the boiler is pressurized.
9. Connect the electrical connector to the sensor.
10. Reinstall the vent stack.

11. Restore water pressure to the boiler.
12. Restore power to the boiler.

5.2.5 Vent High-Limit

This sensor has been installed to ensure the boiler is shut down safely if the heat exchanger or the venting system becomes blocked.

The Vent Hi-Limit is located at the bottom of the heat exchanger just to the left of the vent outlet and above the condensate tray. For access, remove the vent stack and the condensate tray.

5.2.6 Domestic Hot Water Flow Sensor

Section Reserved for the DC Series Boilers.

5.2.7 Domestic Hot Water Sensor

Section Reserved for the DC Series Boilers.

5.2.8 Outdoor Sensor

An Outdoor Sensor is supplied with each boiler. The sensor should be mounted on the north side of the building away from any direct sunlight. The sensor must also be kept away from any heat sources such as exhaust fan outlets, dryer outlets, mechanical room ventilation grills etc.

The Outdoor Sensor is a 12KΩ sensor with resistance values as listed in Table 12. If the sensor is not connected to the boiler, the boiler will operate at the Boiler Supply Temperature set in the User Set Up menu and operate as a Set Point load.

5.2.9 DHW Tank Sensor

The DC and HC Series boilers allow the use of a tank sensor for controlling the domestic hot water tank temperature. IBC Indirect water tanks come with a 10KΩ sensor. An Aquastat may also be used.

If a field supplied domestic hot water sensor is used, it must be a 10KΩ sensor matching the following table.

TEMPERATURE		RESISTANCE	TEMPERATURE		RESISTANCE
°F	°C	Ω	°F	°C	Ω
0	-18	85,362	100	38	5,828
5	-15	72,918	105	41	5,210
10	-12	62,465	110	43	4,665
15	-9	53,658	115	46	4,184
20	-7	42,218	120	49	3,760
25	-4	39,913	125	52	3,383
30	-1	34,558	130	54	3,050
35	2	29,996	135	57	2,754
40	4	26,099	140	60	2,490
45	7	22,763	145	63	2,255
50	10	19,900	150	66	2,045
55	13	17,436	155	68	1,857
60	16	15,311	160	71	1,689
65	18	13,474	165	74	1,538
70	21	11,883	170	77	1,403
75	24	10,501	175	79	1,281
80	27	9,299	180	82	1,172
85	29	8,250	185	85	1,073
90	32	7,334	190	88	983
95	35	6,532	195	91	903

Temperature Sensor resistance values – 10KΩ sensor

5.3 WARNINGS AND FAULTS

5.3.1 Warning Codes

During operation the controller can detect unusual situations and can take action to avoid damage to the heat exchanger or other unsafe operations. During these situations the controller will limit the temperature and power output of the burner, or temporarily disable operation entirely.

These warnings are shown flashing and visible on the main display, and only displayed when an unusual reading is currently detected.

MAIN DISPLAY	DISPLAY FAULT	POSSIBLE SOLUTION
E1	Flue gas temperature approaching limit	• Supply water temperature too high • Ambient temperature too high • Check positioning of flue gas sensor • Heat exchanger front panel loose, check bolt torque • Check heat exchanger for contamination or debris • Replace flue gas temperature sensor
E2	Direct DHW Tank Error - No flow detected when enabling the external DHW pump	• Pump failed – Replace pump • DHW piping loop air locked – Bleed Air • Flow Sensor / Flow Restrictor blocked – Remove and Clean • Flow Sensor Faulty – Replace
E3	S3 – DHW Sensor Open	• Check HC not defined as DC in Installer Menu • Check wiring • Replace Sensor
E4	S3 – DHW Sensor Short	• Check wiring • Replace Sensor
E5	S5 – Outdoor Sensor Short	• Check wiring • Replace Sensor
E6	No pressure sensor detected (voltage < 0.25V on orange sense wire, space heating is disabled)	
E7	Pressure sensor out of range (above 4.25Bar/47psi, space heating is disabled)	
[pressure] P	Boiler loop pressure too low	• Bring the system back up to pressure • Check pressure sensor • Replace pressure sensor
POLE	Polarity detection fault	• Switch the Line and Neutral wire on the power supply • Check grounding • Check for high potential on Neutral wire • Replace controller

5.3.2 Fault codes

If the fault LED is flashing, the controller has detected a fault. A fault code will be displayed on the main display. Once the fault has been corrected the burner controller can be restarted. Press the Reset button on the operating panel to restart the burner controller.

MAIN DISPLAY	DISPLAY FAULT	POSSIBLE SOLUTION
10, 11, 12, 13, 14	Sensor fault S1 Supply Sensor (upper left side of the heat exchanger)	• See below, 1 – Temperature too high • Check the positioning of S1 • Check wiring for break • Replace S1
20, 21, 22, 23, 24	Sensor fault S2 Return Sensor (lower left side of the heat exchanger)	• Check the positioning of S2 • Check wiring for break • Replace S2
0	Sensor fault after self check	Replace S1 and/or S2
1	Temperature too high	• Air in system. Bleed the system of any remaining air • Pump not running, check and/or replace the pump • Insufficient flow in installation, radiators closed
2	S1 and S2 interchanged	• Check wiring harness • Replace S1 or S2
4	No flame signal	• Gas valve closed • Gas supply pressure too low or drooping under load • Gas valve or ignition unit not powered • No or incorrect ignition gap • Condensate drain blocked • Check grounding of all parts
5	Poor flame signal	• Condensate drain blocked • Gas supply pressure too low or drooping under load • Check ignitor and ignition cable • Check gas valve adjustment • Check grounding of all parts of the installation • Check combustion air supply and flue gas exhaust piping and terminations, possible flue gas recirculation in the system
6	Flame detection fault	• Replace ignition cable + ignitor cap • Replace ignition module • Replace controller
8	Incorrect fan speed	• Fan rubbing on casing • Wiring between fan and casing • Check wiring for poor wire contact • Replace fan • Replace controller
18	Flue Gas Temperature Sensor Open – Lockout Condition	• Inspect heat exchanger for fouling and clean as required • Check wiring • Replace Sensor
19	Flue Gas Temperature Sensor Short – Lockout Condition	• Inspect heat exchanger for fouling and clean as required • Check wiring • Replace Sensor
29,30	Gas valve relay faulty	Replace controller

5.4 OTHER FAULTS

5.4.1 Burner Does Not Ignite

POSSIBLE CAUSES	SOLUTION
Gas valve is closed.	Open gas valve.
Air in gas line.	Remove air form gas line.
Gas supply pressure too low.	Contact the gas supply company.
No ignition.	Replace ignition electrode.
No spark. Ignition module on gas valve faulty.	Check the cabling. Check the ignitor cap. Replace the ignition module.
Gas/air adjustment not correctly set.	Check adjustment. See gas/air adjustment.
Fan faulty.	Check the wiring. Check the fuse (3.15A), if necessary, replace the fan.
Fan dirty.	Clean the fan.
Gas valve faulty.	Replace the gas valve. Re-adjust the gas valve, see gas/air adjustment

5.4.2 Burner Ignites Noisily

POSSIBLE CAUSES	SOLUTION
Gas supply pressure too high.	Gas pressure regulator may be faulty. Replace the regulator or contact the gas company.
Incorrect ignition gap.	• Replace the ignitor. • Check the ignitor gap (3/16” / 4.5mm).
Gas/air adjustment not correctly set.	Check the setting. See gas/air adjustment.
Weak spark.	• Check the ignition spark gap. • Replace the ignitor. • Replace the ignition module on the gas valve.

5.4.3 Burner Resonating

POSSIBLE CAUSES	SOLUTION
Gas supply pressure too low.	Gas pressure regulator may be faulty. Replace the regulator or contact the gas company.
Recirculation of combustion gasses.	Check combustion air supply and flue gas exhaust piping and terminations, possible flue gas recirculation in the system.
Gas/air adjustment not correctly set.	Check the setting, see gas/air adjustment.

5.4.4 The Power is Reduced

POSSIBLE CAUSES	SOLUTION
At high rpm the power has fallen by more than 5%.	• Check appliance and flue system for fouling. • Clean the appliance and flue system

5.4.5 No Space Heating

POSSIBLE CAUSES	SOLUTION
Room thermostat (end switches or zone controller) / Outdoor sensor faulty.	• Room thermostat must be a DRY CONTACT style thermostat • Check the wiring • Check and/or Replace the thermostat (end switches or zone controller) • Replace the outdoor sensor
No voltage (24V DC).	• Check the wiring against the diagram. • Check the connector terminals X4.6 and X4.7 for 24V DC with thermostat wires disconnected. • Check the Fuse. • Replace the controller.
Internal Pump not running.	• Check the power supply. • Check connector X2.7 and X2.8 for 120VAC while the pump should be running. • Replace faulty pump if 120VAC is present when the pump should be running. • Replace the controller if 120V is not present when the pump should be running.
Burner not firing on space heating: sensor S1 or S2 faulty.	Replace sensor S1 or S2. See fault code.
Burner does not ignite.	See 5.4.1 Burner Does Not Ignite

5.4.6 Indoor Temperature Does Not Reach Desired Temperature

POSSIBLE CAUSES	SOLUTION
Room thermostat setting incorrect.	Check the setting and if necessary adjust: Set heat anticipator to 0.1A. Thermostat must be a DRY CONTACT style thermostat
Water temperature is too low.	Increase the space heating water temperature. See Table of Programmable Parameters in DC / HC Controller Manual. Check outdoor sensor and wiring for short-circuit.
Water temperatures are set incorrectly	Target water temperature is set higher than the maximum water temperature.
Pump not running correctly. Pump setting is too low (variable speed pumps only).	Increase pump setting, or replace the pump.
No circulation in the heating system.	Ensure the zone valves are open and there are no air blockages.
No heat transfer as a result of lime scale or fouling in the heat exchanger.	De-scale or flush the heat exchanger on the space heating side.

5.4.7 No Hot Water (DHW) (this section is used with the DC Series Boilers only)

POSSIBLE CAUSES	SOLUTION
Flow sensor not functioning.	• DHW flow < 2.0 l/min – .5 GPM. • Clean or replace the flow sensor.
No voltage at the flow sensor (5V DC).	Check the wiring according to the diagram.
Burner not firing on DHW: S3 faulty.	Replace S3.
Burner does not ignite.	See 5.4.1 Burner Does Not Ignite

5.4.8 Hot Water Does Not Reach Temperature (this section is used with the DC Series Boilers only)

POSSIBLE CAUSES	SOLUTION
DHW flow too high.	Adjust the inlet assembly, insert a flow restrictor.
Temperature setting for water circuit too low.	Adjust the hot water circuit, depending on the desired temperature and system configuration. See Table of Programmable Parameters in DC / HC Controller Manual.
No heat transfer as a result of lime scale or fouling in the heat exchanger DHW side.	Descale or flush the exchanger DHW side.
Cold water temperature <5°C.	

6.0 DIAGRAMS

6.1 - PARTS DIAGRAMS

6.2 - WIRING DIAGRAMS

6.1 PARTS DIAGRAMS

HC Series Modulating Boiler - Parts assembly

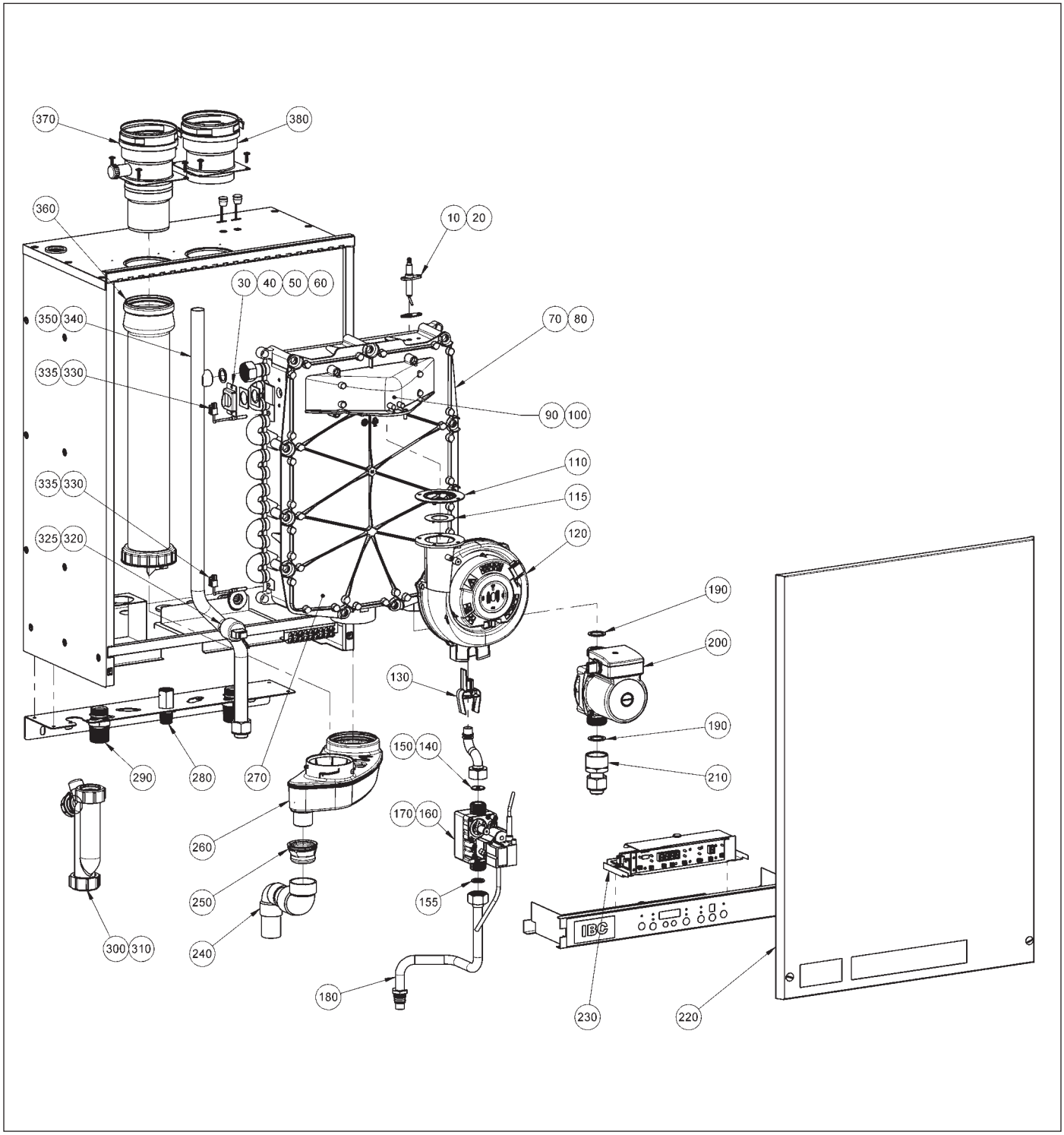

Diagram 6.1-1: Boiler assembly parts

ITEM NO.	PART NO.	DESCRIPTION	QTY
10	240-067	IGNITOR	1
20	250-622	GASKET, IGNITOR	1
30	250-623	VIEWPORT HOLDER	1
40	250-624	GASKET, VIEWPORT HOLDER	1
50	250-625	GASKET, VIEWPORT GLASS	1
60	250-626	VIEWPORT GLASS	1
70	170-020	HEAT EXCHANGER, HC 50	1
	170-021	HEAT EXCHANGER, HC 84	
	170-022	HEAT EXCHANGER, HC 106	
	170-023	HEAT EXCHANGER, HC 124, 125	
	170-024	HEAT EXCHANGER, HC 160	
80	250-687	GASKET, H.Ex., FRONT PANEL, HC 50, DC/HC 84	1
	250-688	GASKET, H.Ex., FRONT PANEL, DC/HC 106	
	250-689	GASKET, H.Ex., FRONT PANEL, DC/HC 124, 125, 160	
90	180-114	BURNER	1
100	250-646	GASKET, BURNER	1
110	250-627	GASKET, FAN	1
115	180-122	ORIFICE, FAN OUTLET, DC/HC 84 ONLY	1
120	240-068	FAN	1
130	180-111	VENTURI, 406, DC/HC 84, 106	1
	180-112	VENTURI, 362, DC/HC 124, 160	
	180-133	VENTURI, 541, HC 50	
	180-141	VENTURI, 471, HC 125	
135	250-731	GAS LINE, UPPER, HC 50, DC/HC 84	
	250-732	GAS LINE, UPPER, DC/HC 106	
	250-733	GAS LINE, UPPER, DC/HC 124, 125, 160	
140	180-119	ORIFICE, 480, NATURAL GAS, DC/HC 50	1
	180-107	ORIFICE, 650, NATURAL GAS, DC/HC 84, 106	
	180-142	ORIFICE, 550, NATURAL GAS, HC 125	
	180-108	ORIFICE, 725, NATURAL GAS, DC/HC 160	
	180-118	ORIFICE, 330, PROPANE, DC/HC 50	
	180-095	ORIFICE, 505, PROPANE, DC/HC 84, 106	
	180-143	ORIFICE, 460, PROPANE, HC 125	
	180-096	ORIFICE, 580, PROPANE, DC/HC 160	
150	150-175	ORIFICE, O-RING	1
155	150-206	GASKET, GAS VALVE, INLET	1
160	180-097	GAS VALVE	1
170	240-069	GAS VALVE CABLE/IGNITION MODULE	1
180	250-628	GAS LINE, LOWER	1
190	250-634	GASKET, PUMP	2
200	180-098	PUMP	1
210	250-631	RETURN PIPE	1
220	500-072	DOOR ASSEMBLY, HC 50, DC/HC 84	1
	500-073	DOOR ASSEMBLY, DC/HC 106	
	500-074	DOOR ASSEMBLY, DC/HC 124, 125, 160	
230	500-051	CONTROLLER ASSEMBLY, DC/HC 84, 106, 124	1
	500-053	CONTROLLER ASSEMBLY, DC/HC 160	
	500-071	CONTROLLER ASSEMBLY, HC 50	
	500-086	CONTROLLER ASSEMBLY, DC/HC 125	
240	190-123	CONDENSATE PIPE ASSEMBLY	1
250	190-124	SEAL, COND. PIPE TO BOTTOM PAN	1
260	180-100	BOTTOM PAN, HEAT EXCHANGER	1
270	240-076	VENT HIGH LIMIT SWITCH	1
280	190-119	FITTING, 1/2" NPT-M	1
290	190-121	FITTING, 1" NPT-M	2
300	180-099	CONDENSATE TRAP, SHORT, DC/HC 50, 84, 106, 124	1
	180-113	CONDENSATE TRAP, LONG, DC/HC 125, 160	
310	250-638	CONDENSATE TRAP HOOK	1
320	240-072	WATER PRESSURE SENSOR TYPE LWCO	1
325	150-204	C-CLIP, WATER PRESSURE SENSOR	1
330	240-073	WATER TEMPERATURE SENSOR	2
335	150-221	CLIP, WATER TEMPERATURE SENSOR	2
340	250-632	SUPPLY PIPE	1
350	250-635	GASKET, SUPPLY PIPE	1
360	250-673	EXHAUST DUCT, INTERNAL, HC 50, DC/HC 84	1
	250-674	EXHAUST DUCT, INTERNAL, DC/HC 106	
	250-675	EXHAUST DUCT, INTERNAL, DC/HC 124, 125, 160	
370	250-636	EXHAUST DUCT	1
380	250-637	INTAKE DUCT	1

Diagram 6.1-2: Boiler assembly parts list (refer to Diagram 6.1-1 on opposite page)

Some parts are available in Kits. Please visit **www.ibcboiler.com** for more information.

6.2 WIRING DIAGRAMS

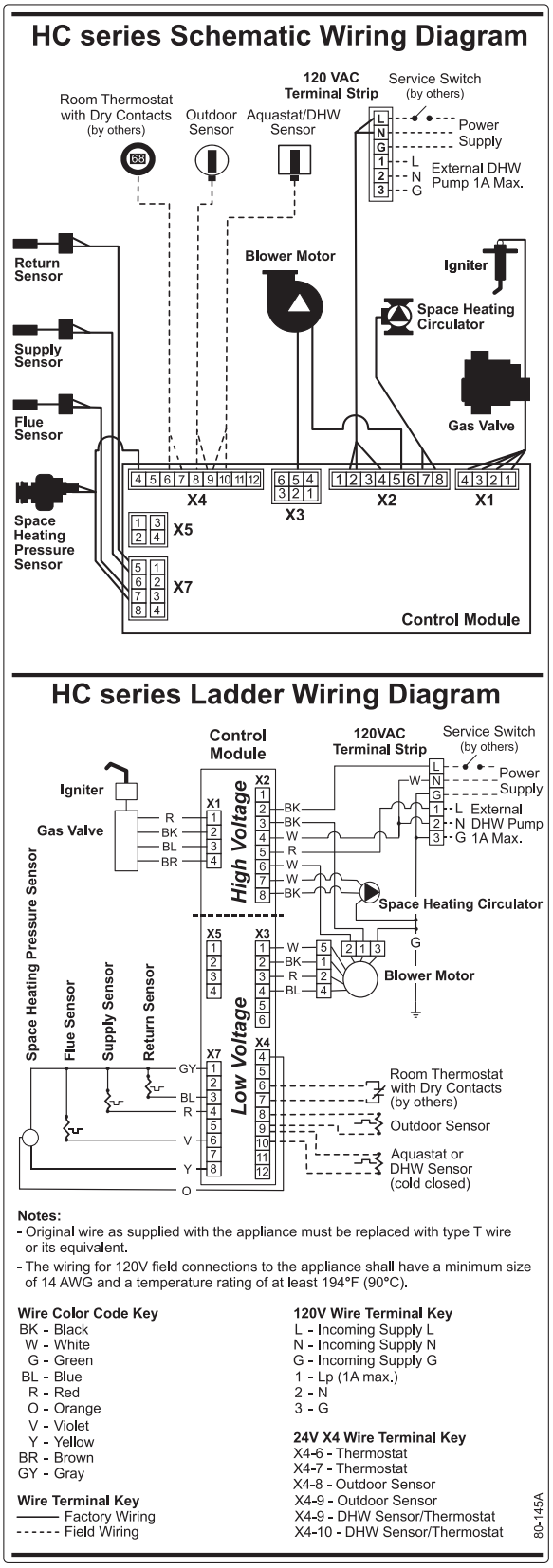

Diagram 6.2-1: Pictorial wiring diagram

INSTALLATION & COMMISSIONING REPORT

Boiler Details:

Model Number _____ **Serial Number** _____

Date of Installation _____ **Address of installation** _____

_____

User contact information _____

Installer Information Company _____

Address _____

Phone/Fax/E mail _____

Fuel ☐ Natural Gas ☐ Propane

Gas Supply Pressure (high fire) _____ Inches w.c. **Measured Rate of Input (high fire)** _____ Btu/hr

☐ Installation instructions have been followed and completed (Section 1 of Installation and Operating Instructions).

☐ Check-out procedures have been followed and completed (Section 3 of Installation and Operating Instructions).

☐ Leak testing completed ☐ gas piping ☐ venting system ☐ Fan and combustion components

☐ System Cleaned and Flushed (type of cleaner used) _____

☐ System Filled (type/concentration of any glycol/chemicals used) _____

☐ Air purge completed

☐ Relief Valve correctly installed and piped ☐ Relief valve “try lever” test performed

☐ Condensate trap filled ☐ Condensate drain clear and free flowing ☐ Condensate Neutralization? Yes/No

☐ Ignition Safety Shutoff test completed. Flame current reading - High fire _____ µA - Low fire _____ µA

☐ Owner advised and instructed in the safe operation and maintenance of the boiler and system.

☐ Information regarding the unit and installation received and left with owner

Combustion Readings - recommended, but optional (required for fuel conversion):

CO_2 _____ % O_2 _____ % CO _____ ppm

Flue temperature _____ Return water temperature (measure simultaneously with flue temp.) _____

Refer to website for registration.

Commissioning has been completed as listed on this report - Installer Signature _____

SERVICE RECORD

DATE	LICENSED CONTRACTOR	DESCRIPTION OF WORK DONE

NOTES

IMPORTANT

This Boiler is equipped with a feature that saves energy by reducing the boiler water temperature as the heating load decreases. This feature is equipped with an override which is provided primarily to permit the use of an external energy management system that serves the same function. THIS OVERRIDE MUST NOT BE USED UNLESS AT LEAST ONE OF THE FOLLOWING CONDITIONS IS TRUE:

- An external energy management system is installed that reduces the boiler water temperature as the heating load decreases.
- This boiler is not used for any space heating.
- This boiler is part of a modular or multiple boiler system having a total input of 300,000 BTU/hr or greater.
- This boiler is equipped with a tankless coil (not applicable to IBC's HC boilers).

US installers should contact IBC for any further information required.

REVISION HISTORY

R1 (JULY 2014)	Initial release
R2 (SEPTEMBER 2014)	New Model - HC 13-50, Minor updates
R3 (MARCH 2015)	Minor Updates, Change DHW Tank Sensor to 10KΩ
R4 (AUGUST 2015)	Address Update
R5 (OCTOBER 2015)	Addition of new model – HC 20-125
R6 (FEBRUARY 2016)	Updated Parameters and Orifice tables
R7 (JULY 2016)	New Propane Back Flow Flapper, Revision to Exhaust Vent Material - USA
R8 (FEBRUARY 2017)	Deletion of old model HC 33-124, Approval of PVC exhaust venting, Pressure-Sensor Type LWCO language
R9 (JUNE 2017)	Separation of Controller Manual, Minor Updates, Change of system type default to 1

IBC Technologies Inc.

8015 North Fraser Way
Burnaby, BC
Canada V5J 5M8

Toll Free: 1.844.432.8422
Tel: 604.877.0277
Fax: 604.877.0295

www.ibcboiler.com

120-185-A-R9
88397709

June 2017
© IBC Technologies Inc. 2017